COGNEX

Advanced machine vision made easy

In-Sight® 2800 Series

Reference Manual



2026 September 24

Revision: 26.2.1.2

Legal Notices

The software described in this documentation is provided "as is" and "as available," without warranty of any kind, express or implied, including but not limited to the warranties of merchantability, fitness for a particular purpose, and non-infringement. In no event shall Cognex Corporation and its global affiliates (collectively, “Cognex”) be liable for any claims, damages, or other liability arising from, out of, or in connection with the software or your use of the software.

Your use of this software is governed by the full terms and conditions of the Cognex Software License Agreement. For complete licensing details and legal terms, please visit https://www.cognex.com/terms-and-conditions.

The information in this document is subject to change without notice and should not be construed as a commitment by Cognex. Cognex is not responsible for any errors that may be present in either this document or the associated software.

Companies, names, and data used in examples herein are fictitious unless otherwise noted. No part of this document may be reproduced or transmitted in any form or by any means, electronic or mechanical, for any purpose, nor transferred to any other media or language without the written permission of Cognex Corporation.

Portions of the hardware and software provided by Cognex may be covered by one or more U.S. and foreign patents, as well as pending U.S. and foreign patents listed on the Cognex web site at: cognex.com/patents.

In the event of any inconsistency between the English language version of this documentation and any other language version, the English language version shall take precedence.

Copyright © 2026. Cognex Corporation. All Rights Reserved.

The following are registered U.S. trademarks of Cognex Corporation:

2DMAX, 3D LIGHTBURST TECHNOLOGY, ADVANTAGE, ALIGNPLUS, ASSEMBLYPLUS, COGNEX, COGNEX VISION FOR INDUSTRY, CVL, DATAMAN, DVT, EASYBUILDER, EDGE INTELLIGENCE, HOTBARS, IDMAX, IN-SIGHT, LIGHTBURST, MX, OMNIVIEW, PATFIND, PATFLEX, PATINSPECT, PATMAX, PATMAX REDLINE, PATQUICK, POWERGRID, QUICKSORT, ULTRALIGHT, VISION SOLUTIONS, VISIONPRO, VISIONVIEW

The following are trademarks of the Cognex Corporation:

1DMAX, 3D SYMBOLIC LIGHT, 3D-LOCATE, 3DMAX, ONEVISION, PINPOINT, RANGEMAX, SLX, VIDI, OCRMAX, INSPECTEDGE, VISION SOLUTIONS

Portions copyright © Microsoft Corporation. All rights reserved.

Portions copyright © MadCap Software, Inc. All rights reserved.

Other product and company trademarks identified herein are the trademarks of their respective owners.

Precautions

To reduce the risk of injury or equipment damage, observe the following precautions when you install the Cognex product:

- Connectivity is possible through the following options:
  - 24 VDC (+/- 10%) output connection using a UL or NTRL listed power supply

  Any other voltage creates a risk of fire or shock and can damage the components. Applicable national and local wiring standards and rules must be followed.
- This product is intended for industrial use in automated manufacturing or similar applications.
- The safety of any system incorporating this product is the responsibility of the assembler of the system.
- Do not install Cognex products where they are exposed to environmental hazards such as excessive heat, dust, moisture, humidity, impact, vibration, corrosive substances, flammable substances, or static electricity.
- Do not expose the image sensor to laser light. Image sensors can be damaged by direct, or reflected, laser light. If your application requires laser light that might strike the image sensor, use a lens filter at the corresponding laser wavelength. For suggestions, contact your local integrator or application engineer.
- Route cables and wires away from high-current wiring or high-voltage power sources to reduce the risk of damage or malfunction from the following causes: over-voltage, line noise, electrostatic discharge (ESD), power surges, or other irregularities in the power supply.
- Do not expose the image sensor to laser light. Image sensors can be damaged by direct, or reflected, laser light. If your application requires laser light that might strike the image sensor, use a lens filter at the corresponding laser wavelength. For suggestions, contact your local integrator or application engineer.
- This product does not contain user-serviceable parts. Do not make electrical or mechanical modifications to product components. Unauthorized modifications can void your warranty.
- Changes or modifications not expressly approved by the party responsible for regulatory compliance could void the user's authority to operate the equipment.
- Include service loops with cable connections.
- Ensure that the cable bend radius begins at least six inches from the connector. Cable shielding can be degraded or cables can be damaged or wear out faster if a service loop or bend radius is tighter than 10X the cable diameter.
- This device should be used in accordance with the instructions in this manual.
- All specifications are for reference purposes only and can change without notice.

Symbols

The following symbols indicate safety precautions and supplemental information:

WARNING: This symbol indicates a hazard that could cause death, serious personal injury or electrical shock.

CAUTION: This symbol indicates a hazard that could result in property damage.

Note: This symbol indicates additional information about a subject.

Tip: This symbol indicates suggestions and shortcuts that might not otherwise be apparent.

Table of Contents

Legal Notices 2
Precautions 3
Symbols 4
Table of Contents 5
Getting Started 7
About the In-Sight 2800 Series 7
Illumination Options for In-Sight 2800 8
Accessories 10
Lenses 10
Illumination 10
Lens Covers 12
Mounting Brackets 13
Cables 14
Support 14
Setting Up Your In-Sight 2800 Vision System 15
Vision System Layout 15
Dimensions 16
In-Sight 2800 Mini with 6.2 mm lens 16
In-Sight 2800 Mini with 16 mm Lens 18
In-Sight 2800 with Multi Torch 19
In-Sight 2800 Mini with 6.2 mm Lens - Right Angle Configuration 20
In-Sight 2800 Mini with 16 mm Lens - Right Angle Configuration 21
In-Sight 2800 with Multi Torch - Right Angle Configuration 22
In-Sight 2800 with Dome Attachment 22
In-Sight 2800 with Dome Attachment - Right Angle Configuration 23
In-Sight 2800 with C-Mount Attachment - Right Angle Configuration 24
In-Sight 2800 Series with Wide-Angle High-Powered Illumination Accessory (HIPA) 25
In-Sight 2800 Series with C-Mount 26
In-Sight 2800 Series with C-Mount Cover Straight Configuration 26
In-Sight 2800 Series with C-Mount Cover Right Angle Configuration 27
Field of View and Working Distance 29
In-Sight 2800 with Multi Torch and 8 mm Lens 29
In-Sight 2800 with Multi Torch and 12 mm Lens 30
In-Sight 2800 with Multi Torch and 16 mm lens 31
In-Sight 2800 Mini with 6.2 mm Lens 32
In-Sight 2800 Mini with 16 mm Lens 33
In-Sight 2800 with High-Powered Illumination Accessory (HPIA) and 6.2 mm Lens 34
In-Sight 2800 with High-Powered Illumination Accessory (HPIA) and 16 mm Lens 35
In-Sight 2802 with 8 mm High Speed Liquid Lens 36
In-Sight 2802 with Multi Torch and 12 mm Lens 37
In-Sight 2802 with Multi Torch and 16 mm Lens 38
Installing and Changing Lenses 39
Installing Manual Lens on Multi Torch 40
Changing Front Cover on Multi Torch 47

Changing M12 Lenses 49
Set the Focus Position for M12 Lens 54
Connecting the Vision System 55
Mounting the Vision System 56
Connecting the Ethernet Cable 57
Connecting the Power and I/O Breakout Cable 58
Indicator LEDs 58
Using Your In-Sight 2800 Vision System 60
Installing the In-Sight Vision Suite 60
Trigger Types 61
Industrial Protocols 62
Specifications 63
In-Sight 2800 Vision System 63
In-Sight 2800 Series Vision System Image Sensor 64
Spectral Response Diagram 64
LED and Laser Wavelengths 66
Acquisition Trigger Input 66
High-Speed Outputs 68
High Speed Output Wiring 69
Ethernet Cable 70
Power and I/O Breakout Cable Specifications 70
CCB-PWRIO-05 71
Cleaning and Maintenance 72
Clean the Housing 72
Clean the Vision System Image Sensor Window 72
Clean the Vision System Lens Cover 72
Regulations and Conformity 73
中国大陆RoHS (Information for China RoHS Compliance) 75
For European Community Users 75

Getting Started

This section provides general information about the In-Sight 2800 series vision system and the accessories and systems.

About the In-Sight 2800 Series

The In-Sight 2800 series vision systems are high-performance, easy hardware and software setup vision systems that offer:

- Premium class performance in a compact package
- Unmatched modularity and ease of use
- 2 Mp monochrome and color, 1.6 Mp monochrome and color, and SVGA monochrome resolutions





Illumination Options for In-Sight 2800

The following illumination options are available for In-Sight 2800 vision systems:

- **Multi Torch**:

  The Multi Torch is a high-powered integrated multi-color light module. The Multi Torch is available with RED, GREEN, BLUE, and WHITE colors in a single package, or as an IR variant that also features an IR bandpass filter built into the lens. The Multi Torch is compatible with vision system using 8, 12, or 16 mm lens.



- **High-Powered Illumination Accessory (HPIA)**:

  The High-Powered Illumination Accessory is a wide-angle light available in WHITE color option with polarization screen and power Y-cable included. The HPIA is compatible with the In-Sight 2800 vision system using 6.2 or 16 mm lens.



- **High Powered Illumination for 16 mm lens:**

  High-powered integrated light attachments are available in RED or WHITE color options for In-Sight 2800 Mini vision systems using a 16 mm lens.



- **Standard Illumination for 6.2 mm lens:**

  Integrated light attachments are available in RED, WHITE, BLUE, or IR options for In-Sight 2800 Mini vision systems using a 6.2 mm lens. The IR option also features an IR bandpass filter built into the lens.



Accessories

You can purchase the following components separately. For a list of options and accessories, contact your local Cognex sales representative.

Lenses

Accessory	Product Number	Illustration
12 mm Manual Focus Lens Module to be used with Multi Torch light	280-TORCH-MAN12	
16 mm Manual Focus Lens Module to be used with Multi Torch light	280-TORCH-MAN16	
Blue bandpass filter supported with IS2800 Mini with 6.2 mm lens illumination only	DM150-BP470	
Blue bandpass filter, 450 nm	280-TORCH-BP450	
Red bandpass filter supported with IS2800 Mini with 6.2 mm lens illumination only	DM150-BP635	
Red bandpass filter, 635 nm	280-TORCH-BP635	

Illumination

Accessory	Product Number	Illustration
Red LED Light for 6.2 mm Lens (Risk Group Exempt acc. IEC 62471)	DM150-LED-RED	
White LED Light for 6.2 mm Lens (Risk Group Exempt acc. IEC 62471)	DM150-LED-WHT	
Blue LED Light for 6.2 mm Lens (Risk Group Exempt acc. IEC 62471)	DM150-LED-BLU	
High-Powered Red LED Light for 16 mm Lens (Risk Group Exempt acc. IEC 62471) For maximum light power 24 V DC supply is recommended.	280-LED-REDHP	

⚠ **CAUTION**: 280-TORCH-MULTI devices equipped with a target aimer have been tested in accordance with IEC60825-1 3rd ed., 2014., and have been certified to be under the limits of a Class 2 Laser device.

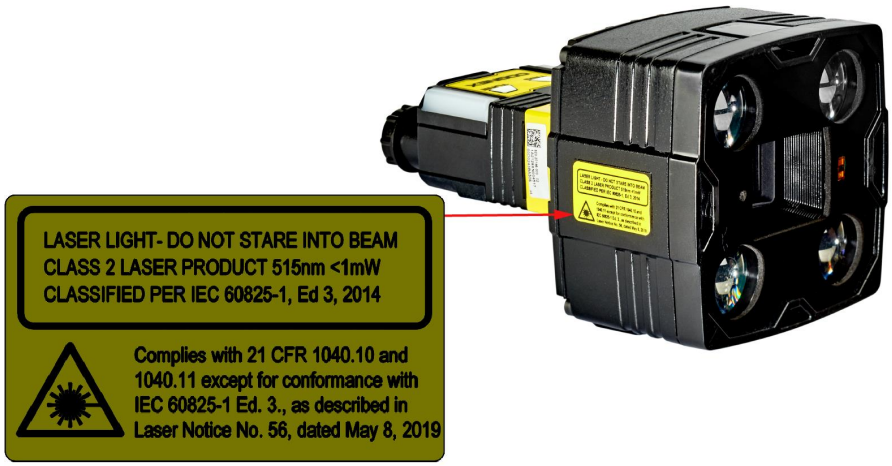
LASER LIGHT- DO NOT STARE INTO BEAM
CLASS 2 LASER PRODUCT 515nm <1mW
CLASSIFIED PER IEC 60825-1, Ed 3, 2014
Complies with 21 CFR 1040.10 and
1040.11 except for conformance with
IEC 60825-1 Ed. 3., as described in
Laser Notice No. 56, dated May 8, 2019

Lens Covers

Accessory	Product Number	Illustration
Standard front cover. Use with a 6.2 mm lens only.	DM280-CVR-62	
Standard front cover, fully-polarized. Use with a 6.2 mm lens only.	DM280-LENS-62CVR-F	
Extended front cover. Use with a 16 mm lens only.	DM260-LENS-16CVR	
Extended front cover, half-polarized. Use with a 16 mm lens only.	DM260-LENS-16CVR-P	
Extended front cover, fully-polarized. Use with a 16 mm lens only.	DM260-LENS-16CVR-F	
Cross-polarized cover for Multi Torch	280-TORCH-COVPOL	
Clear cover for Multi Torch	280-TORCH-COVCLR	
Diffuse cover for Multi Torch	280-TORCH-COVDIF	
Dome Diffuser cover for Multi Torch	280-TORCH-DOME	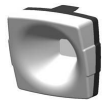

⚠ **CAUTION**: For 280-TORCH-COVPOL, 280-TORCH-COVCLR, and 280-TORCH-COVDIF equipped with a Time-of-Flight sensor, the device has been tested to be under the limits of a Class 1 Laser device.



Mounting Brackets

Accessory	Product Number	Illustration
Universal mounting bracket	DM100-UBRK-000	
Pivot mounting bracket	DM100-PIVOTM-01	
Tilted angle pivot bracket	DMBK-DMPIVOT-00	
Flat surface mounting plate adapter for Multi Torch configuration	280-BKT-ADAPT	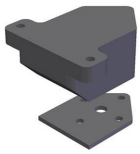

Cables

Note: Cables are sold separately.

Accessory	Product Number	Illustration
Ethernet Cable, X-coded M12-8 to RJ-45	CCB-84901-2001-xx (straight, xx specifies length: 2m, 5m, 10m, 15m, 30m)	
Ethernet Cable, X-coded M12-8 to RJ-45	CCB-84901-2002-xx (right-angled, xx specifies length: 2m, 5m, 10m)	
Ethernet Cable, Robotic X-Coded M12-8 to RJ-45	CCB-84901-2RBT-xx (straight, xx specifies length: 2m, 5m, 10m)	
X-Coded to A-Coded Ethernet cable adapter, 0.5 m	CCB-M12X8MS-XCAC	
Power and I/O Breakout Cable, M12-12 to Flying Lead	CCB-PWRIO- xx (straight, xx specifies length: 5m, 10m, 15m)	
Power and I/O Breakout Cable, M12-12 to Flying Lead	CCB-PWRIO-xxR (right-angled, xx specifies length: 5m, 10m, 15m)	
I/O Module Cable	CCB-PWRIO-MOD-xx (xx specifies length: 2m, 5m)	
RS-232 Connection Cable	CCB-M12xDB9Y-05	
I/O Extension Cable	CKR-200-CBL-EXT	
Lighting Cable, Y Split of Power/IO	CCB-M12-IVSL-Y	

Support

Many information resources are available to help you use the vision system:

- The *EasyBuilder Help* file, provided with the In-Sight software.
- On-demand training: cognex.com/on-demand-training.aspx.
- The In-Sight online support site: cognex.com/support/insight.

Note: For the latest documentation, visit: support.cognex.com/documentation/in-sight.

Setting Up Your In-Sight 2800 Vision System

Read this section to learn how the vision system connects to its standard components and accessories.

Note:

- Cables are sold separately.
- If a standard component is missing or damaged, immediately contact your Cognex Authorized Service Provider (ASP) or Cognex Technical Support.

CAUTION: All cable connectors are keyed to fit the connectors on the vision system. Do not force the connections or damage may occur.

Vision System Layout

The image and table below shows the elements of the vision system.

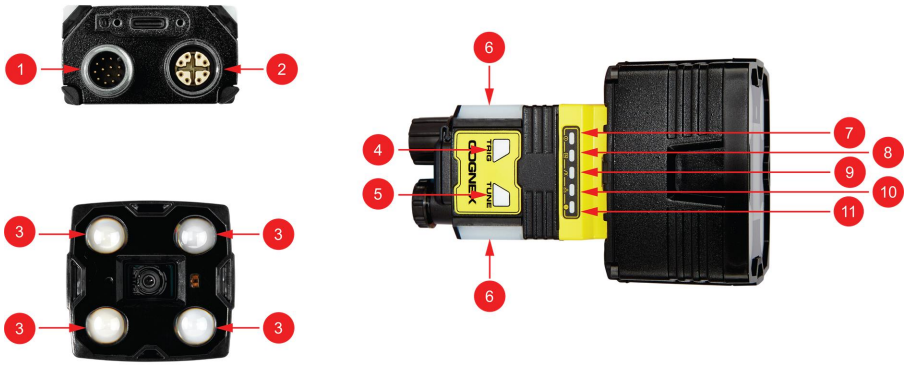

Number	Description
1	Power I/O Breakout cable connector
2	Ethernet connector
3	Illumination LEDs
4	Trigger button **Note**: The Trigger button is not supported.
5	Tune button **Note**: The Tune button is not supported.
6	Ring LED indicator
7	Power LED indicator
8	Train/Trigger status LED indicator
9	Pass/Fail LED indicator
10	Communication LED indicator
11	Error LED indicator

Dimensions

The following sections list dimensions of the vision system.

Note:

- Dimensions are in millimeters and are for reference purposes only.
- All specifications are for reference purposes only and can change without notice.

In-Sight 2800 Mini with 6.2 mm lens

The following image shows the dimensions of In-Sight 2800, equipped with 6.2 mm lens.

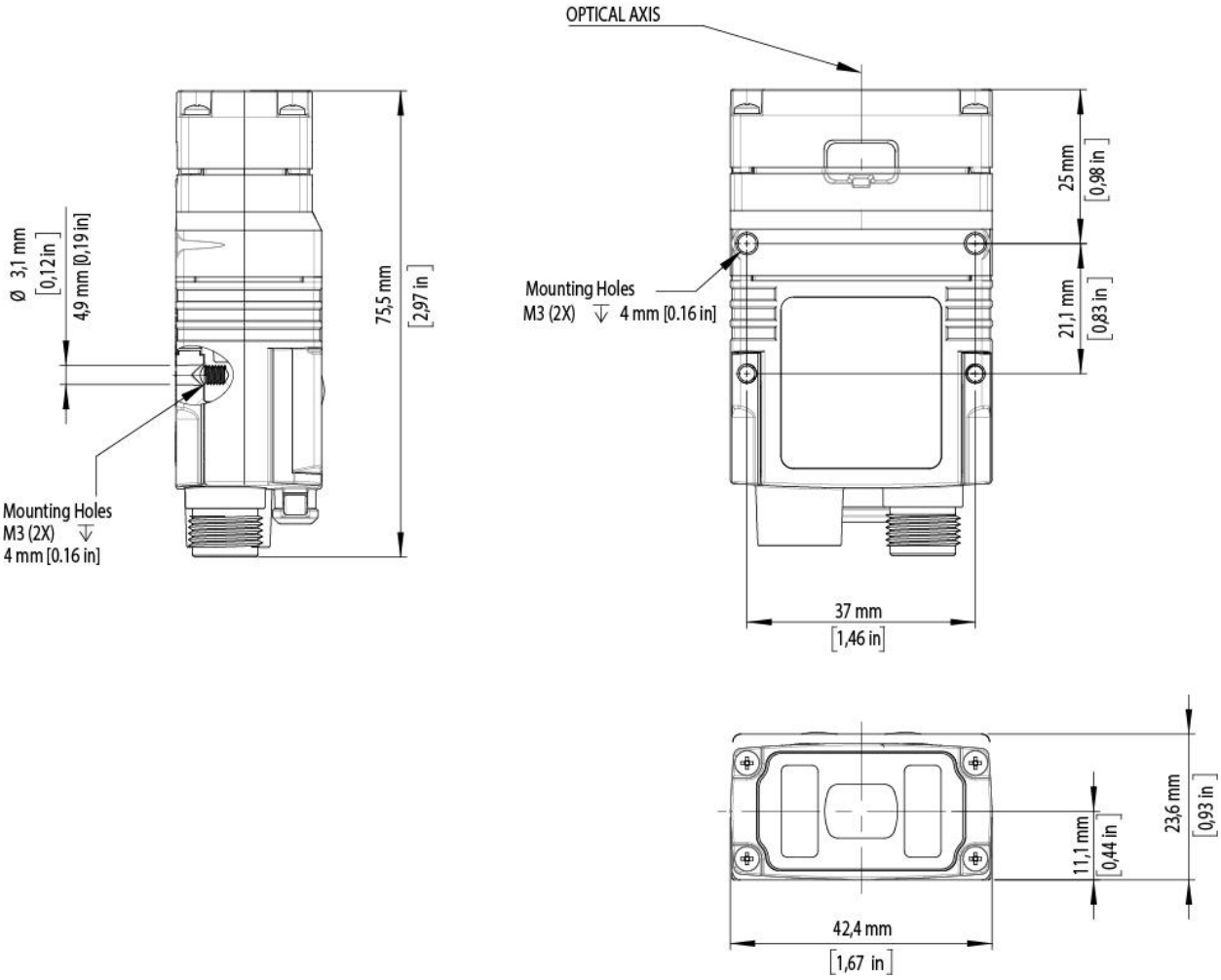

In-Sight 2800 Mini with 16 mm Lens

The following image shows the dimensions of In-Sight 2800 equipped with 16 mm lens.

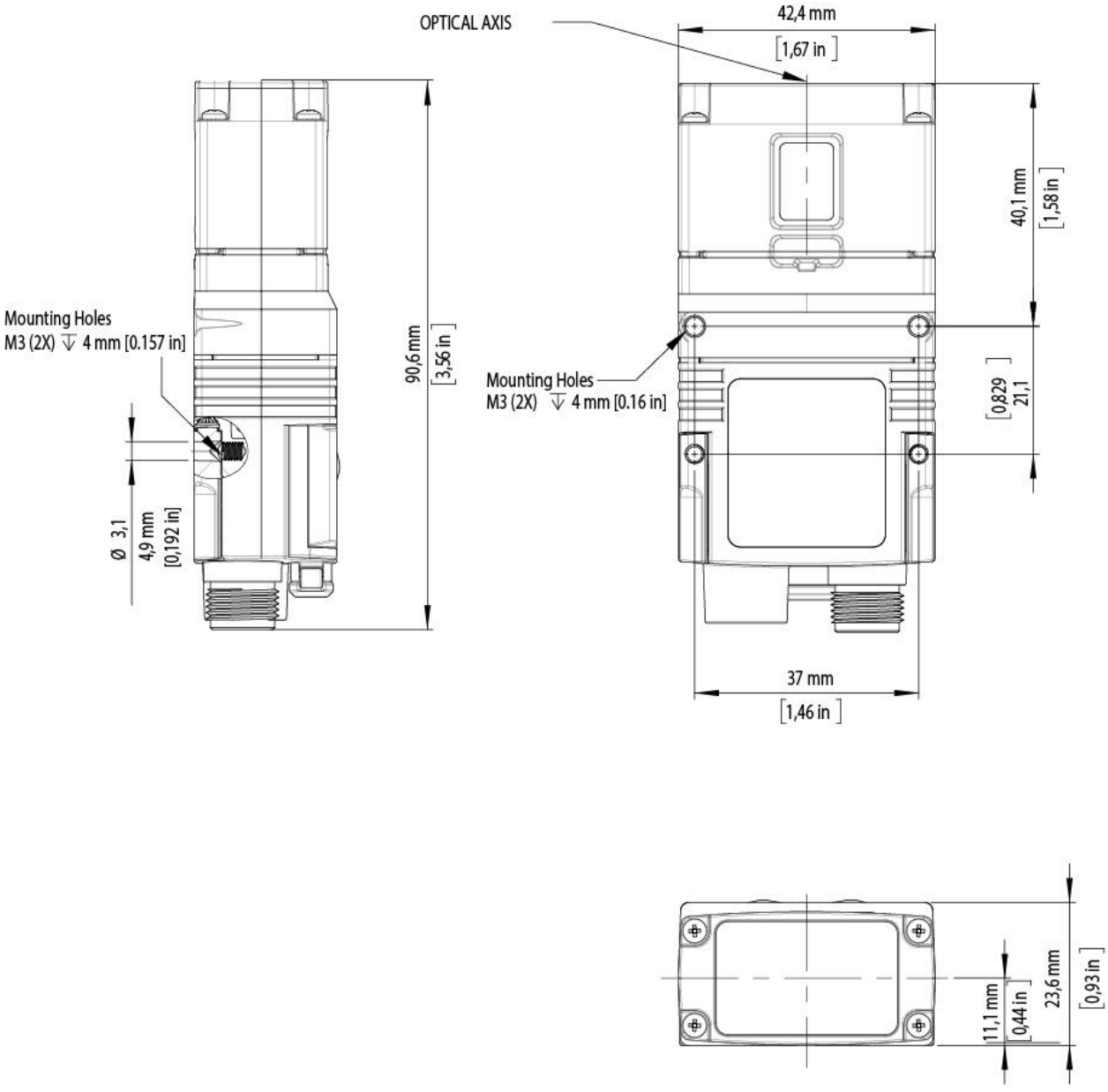

In-Sight 2800 with Multi Torch

The following image shows the dimensions of In-Sight 2800 equipped with Multi Torch.

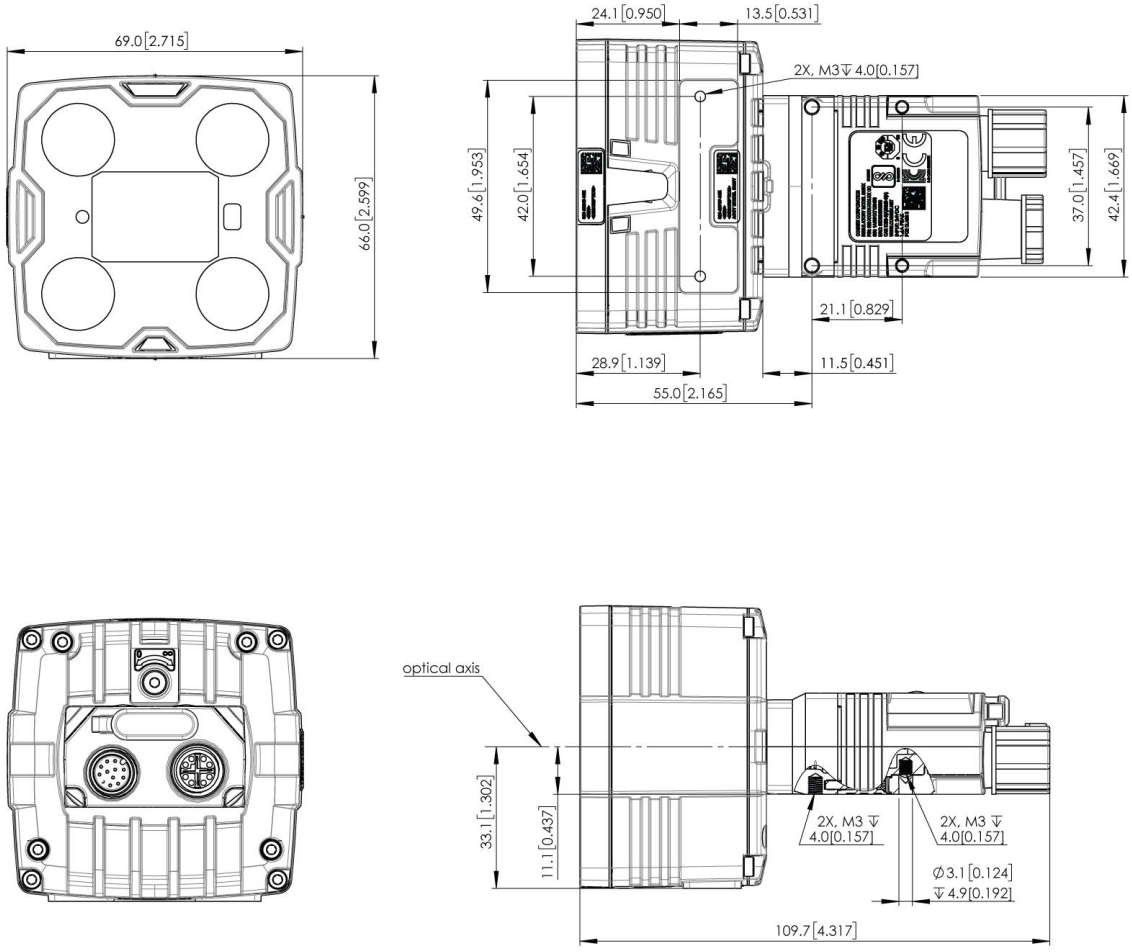

In-Sight 2800 Mini with 6.2 mm Lens - Right Angle Configuration

The following image shows the dimensions of In-Sight 2800 equipped with L-shaped extension and 6.2 mm lens.

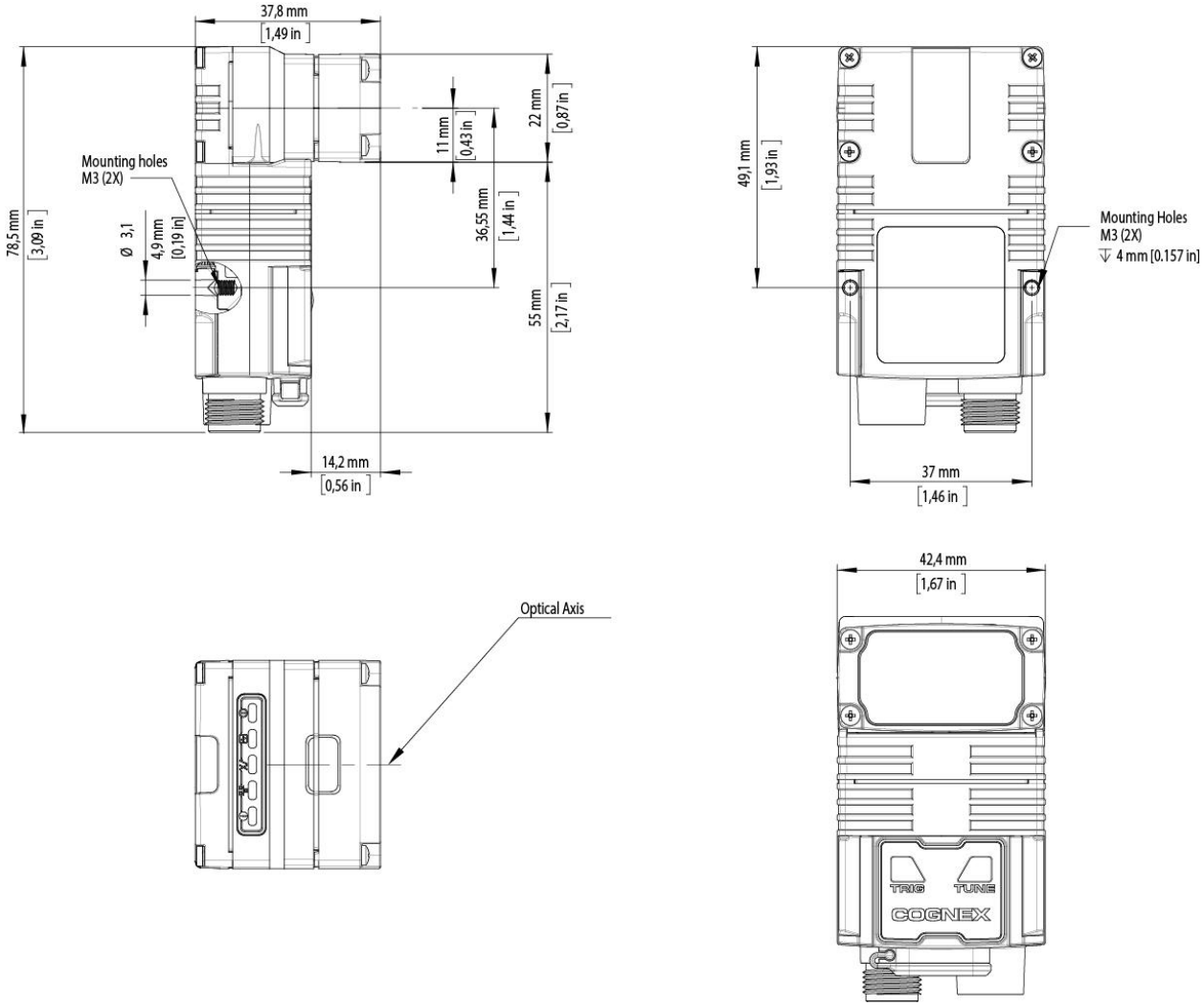

In-Sight 2800 Mini with 16 mm Lens - Right Angle Configuration

The following image shows the dimensions of In-Sight 2800 equipped with L-shaped extension and 16 mm lens.

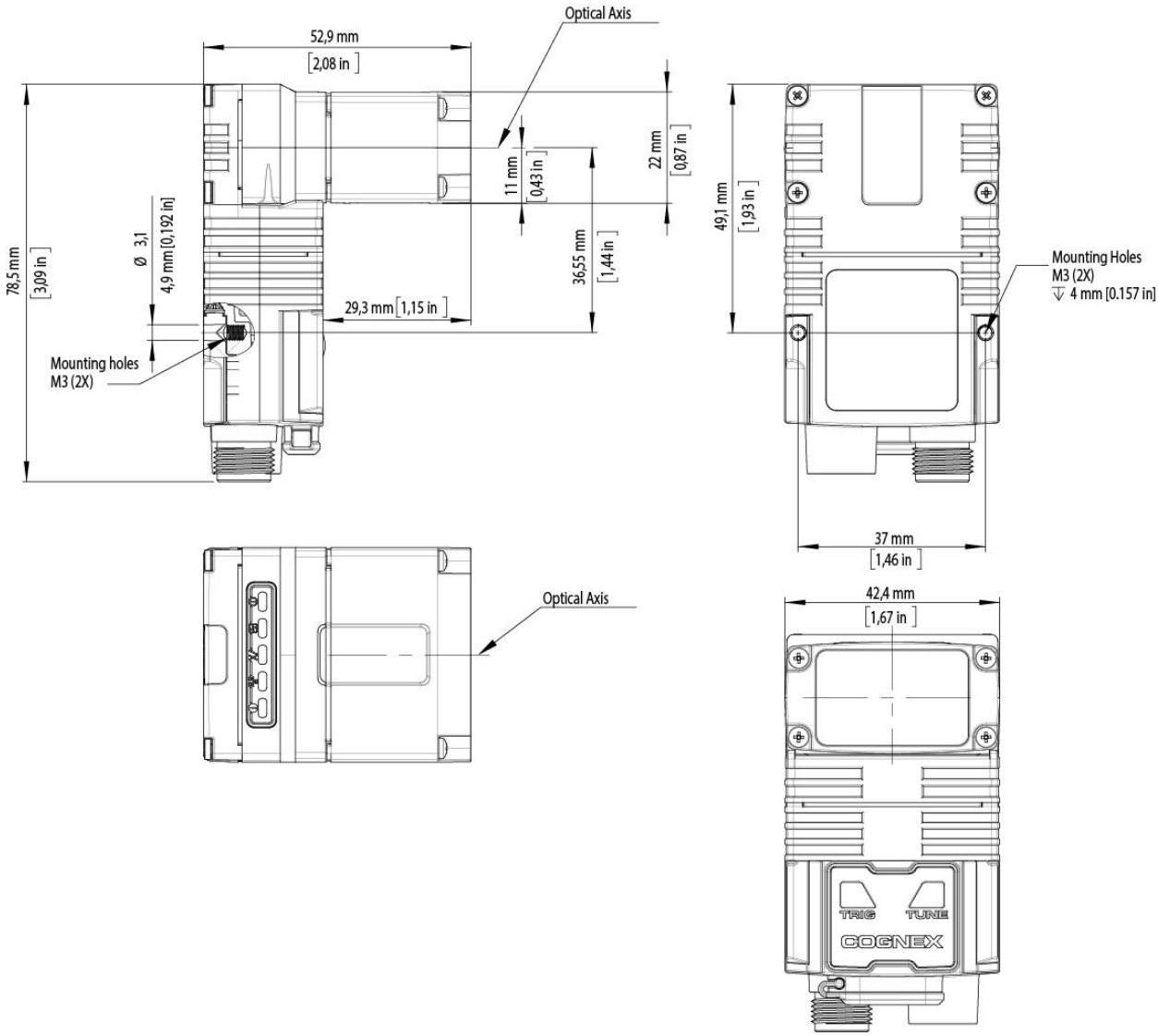

In-Sight 2800 with Multi Torch - Right Angle Configuration

The following image shows the dimensions of In-Sight 2800 equipped with a Multi Torch and L-shaped extension.

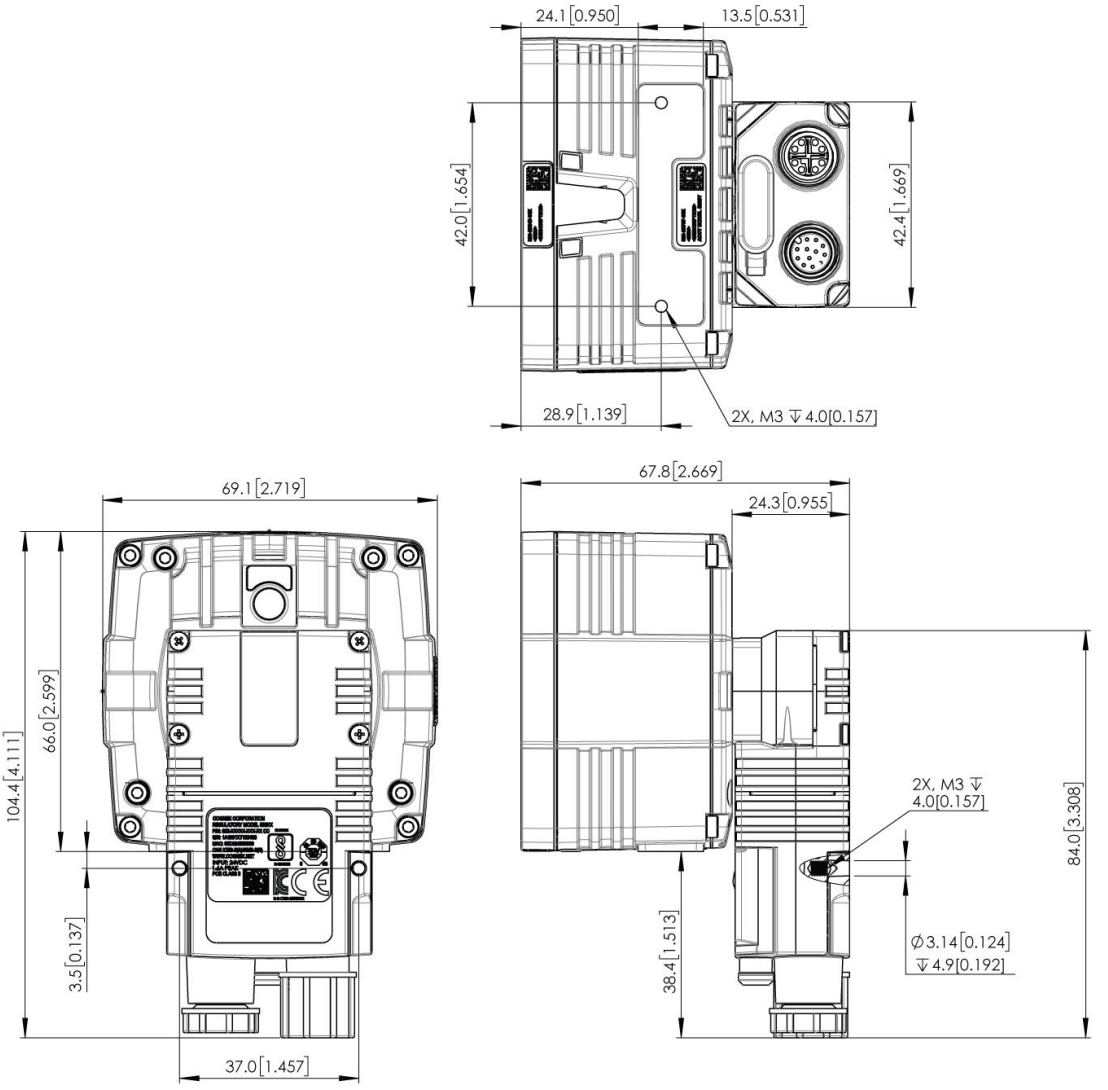

In-Sight 2800 with Dome Attachment

The following image shows the dimensions of In-Sight 2800 equipped with a dome attachment.

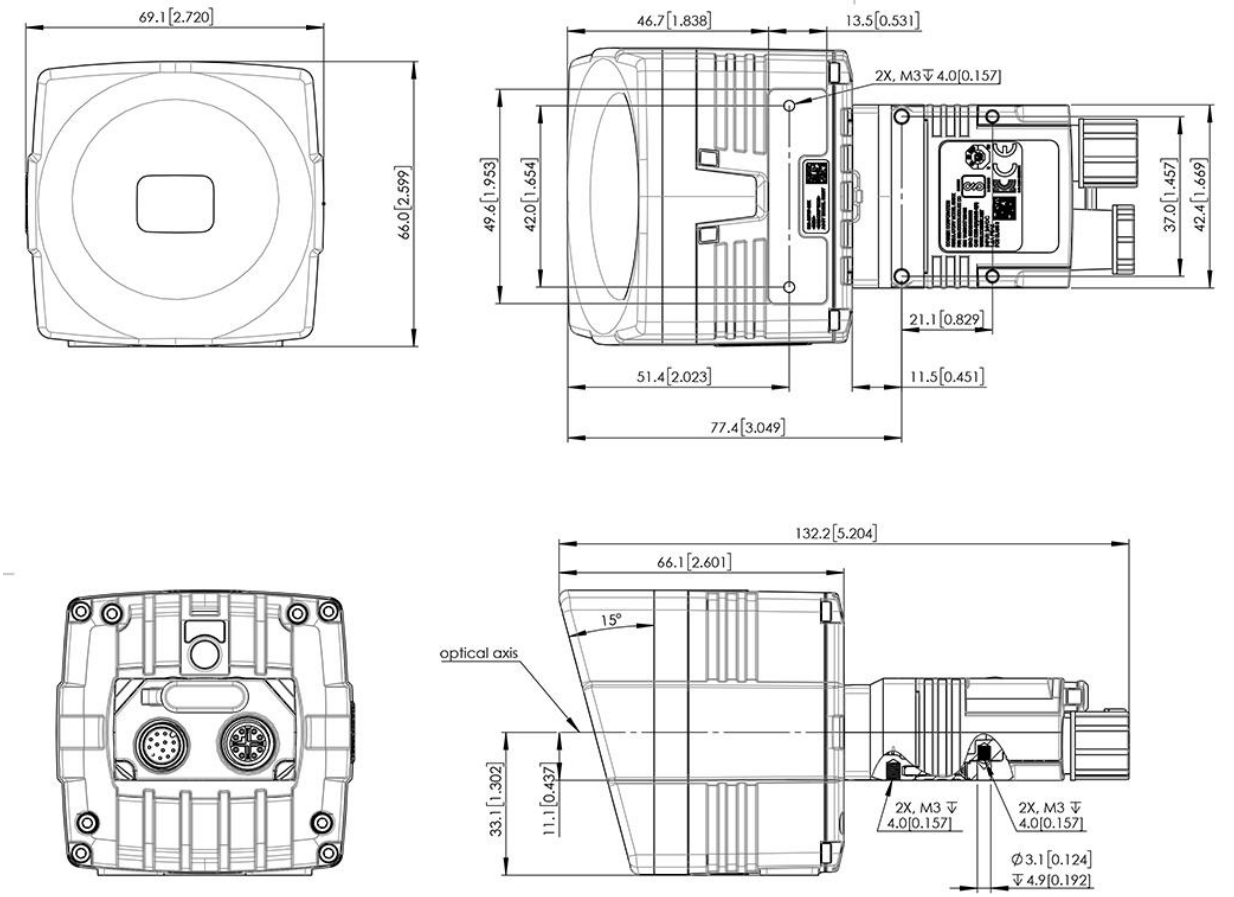

In-Sight 2800 with Dome Attachment - Right Angle Configuration

The following image shows the dimensions of In-Sight 2800 equipped with L-shaped extension and dome front cover.

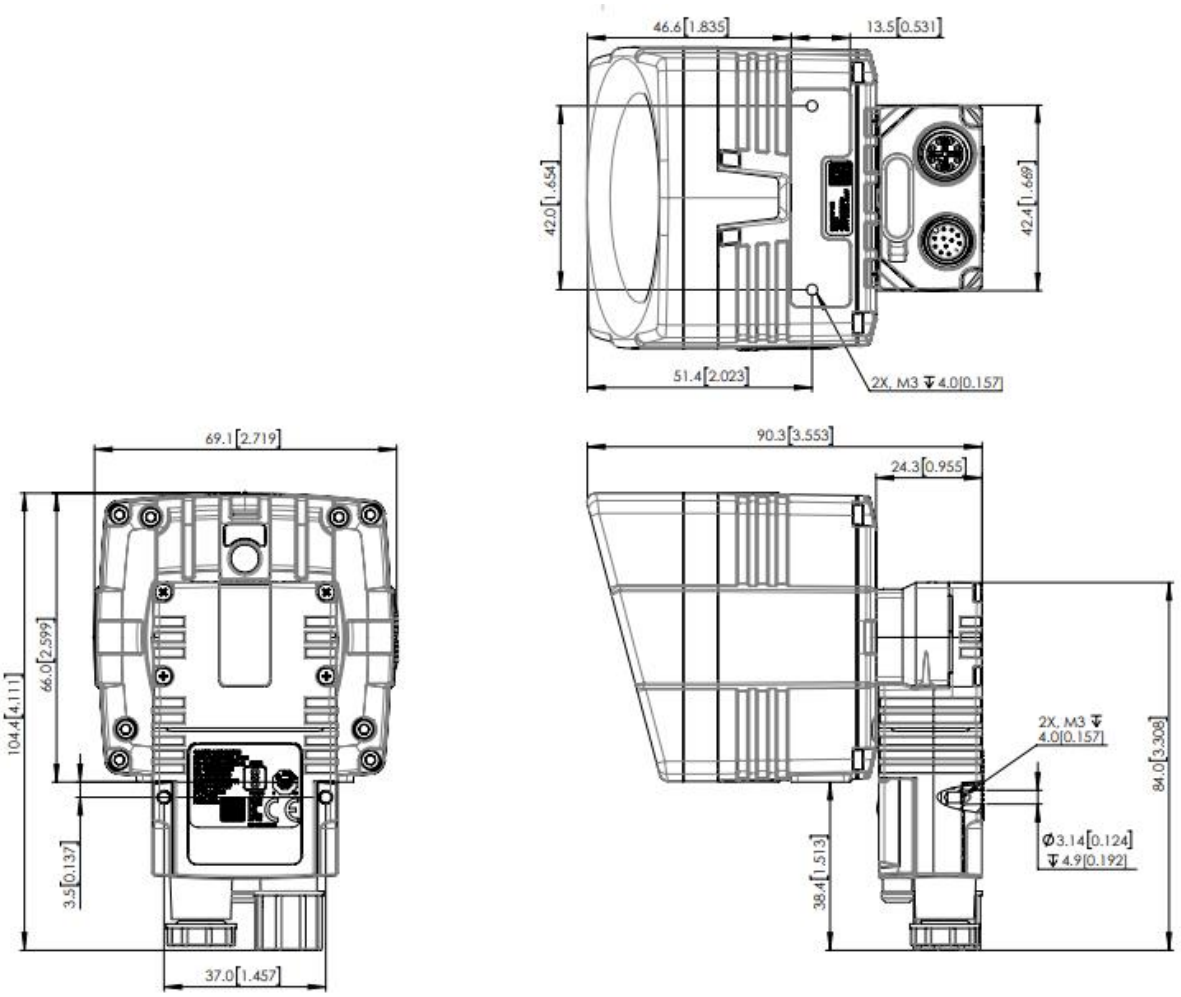

In-Sight 2800 with C-Mount Attachment - Right Angle Configuration

The following image shows the dimensions of In-Sight 2800 equipped with right-angled C-mount extension.

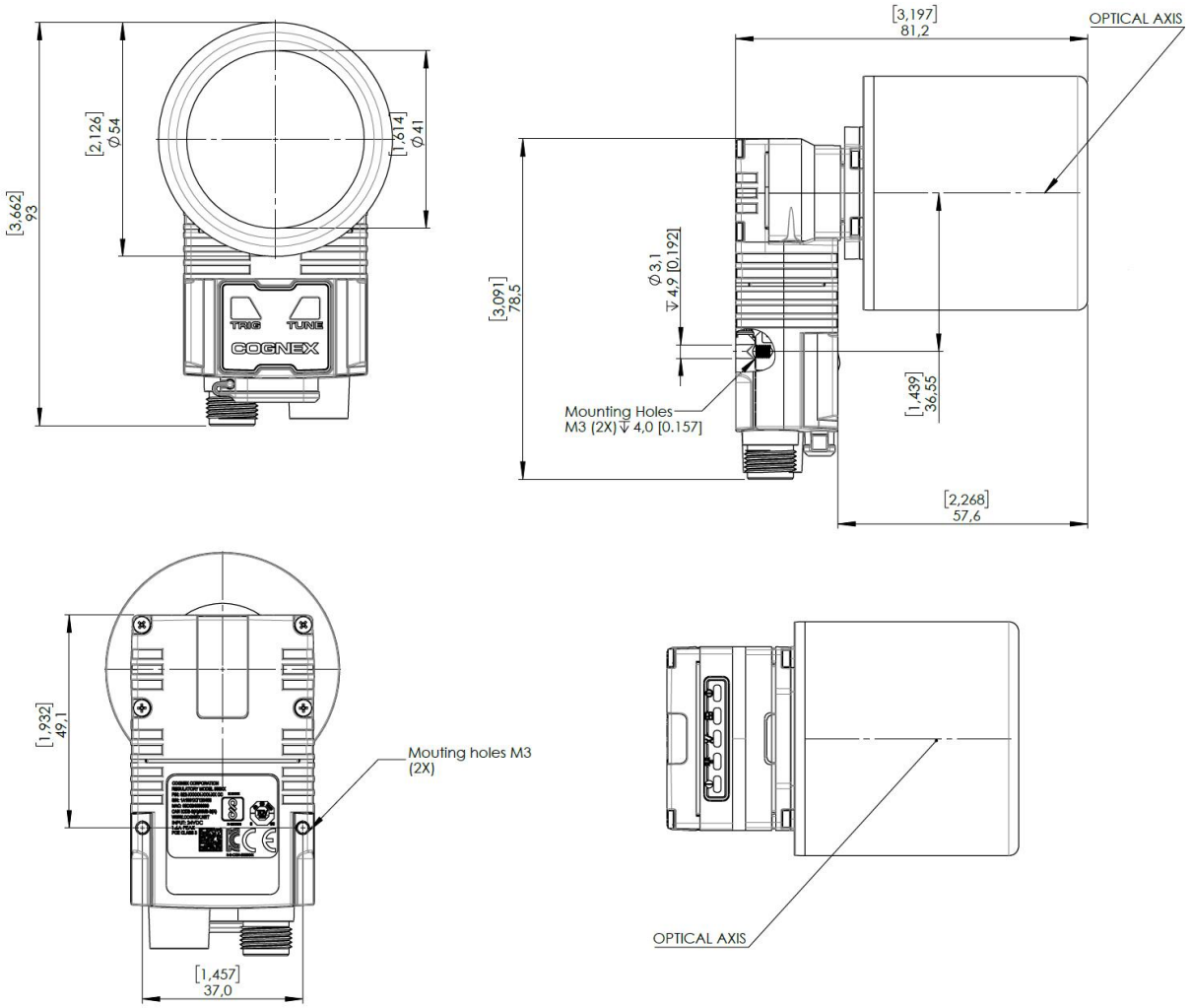

In-Sight 2800 Series with Wide-Angle High-Powered Illumination Accessory (HIPA)

The following image shows the dimensions of In-Sight 2800 equipped with wide-angle High-Powered Illumination Accessory (HPIA).

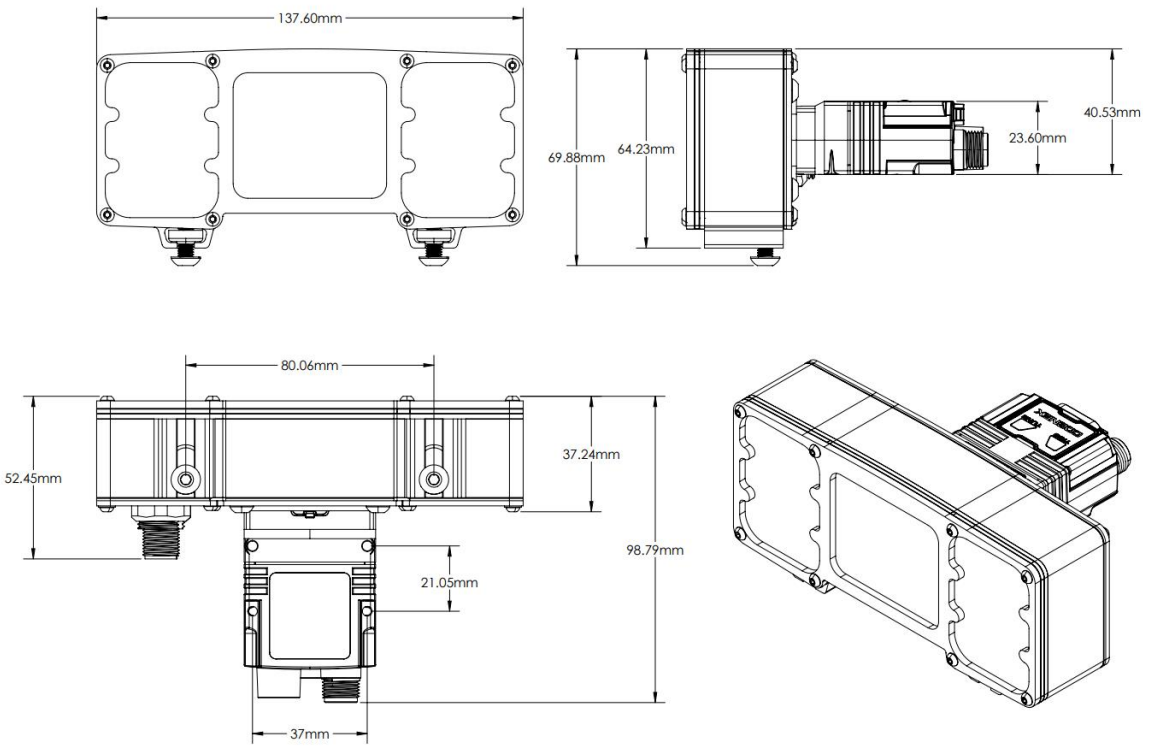

In-Sight 2800 Series with C-Mount

The following image shows the dimensions of In-Sight 2800 with C-mount.

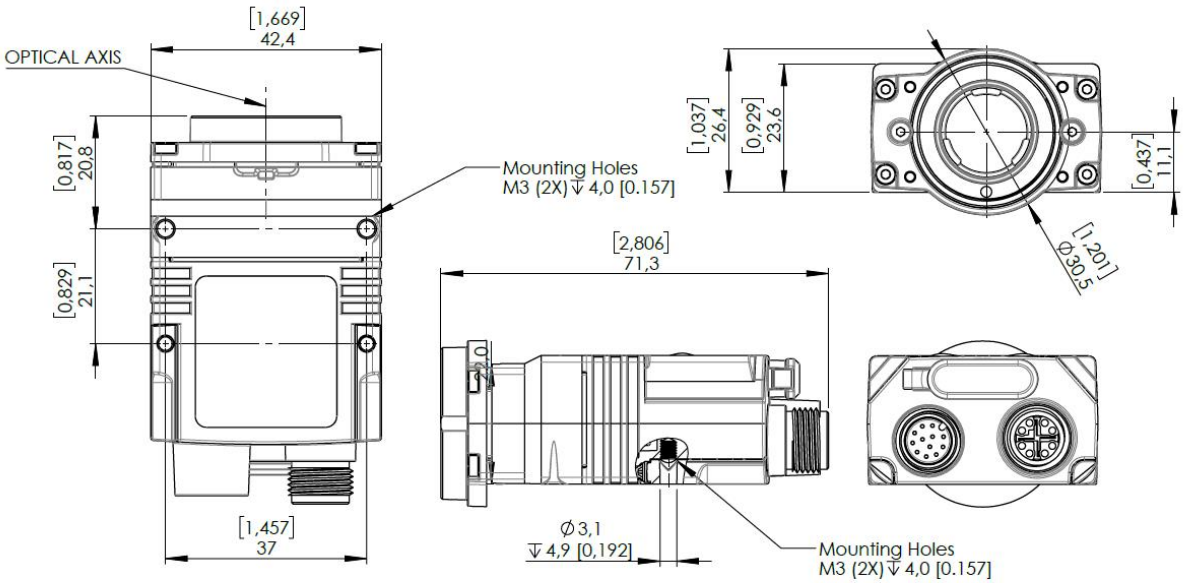

In-Sight 2800 Series with C-Mount Cover Straight Configuration

The following image shows the dimensions of In-Sight 2800 with C-mount cover.

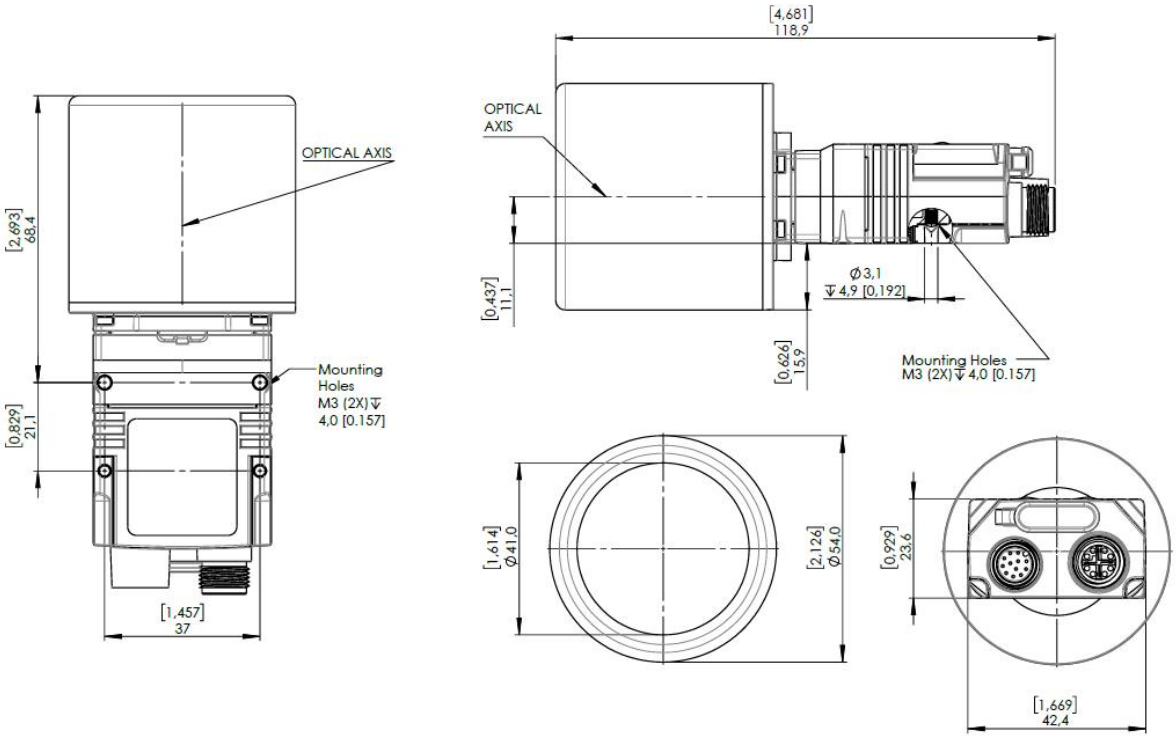

In-Sight 2800 Series with C-Mount Cover Right Angle Configuration

The following image shows the dimensions of In-Sight 2800 with C-mount cover, right angle configuration.

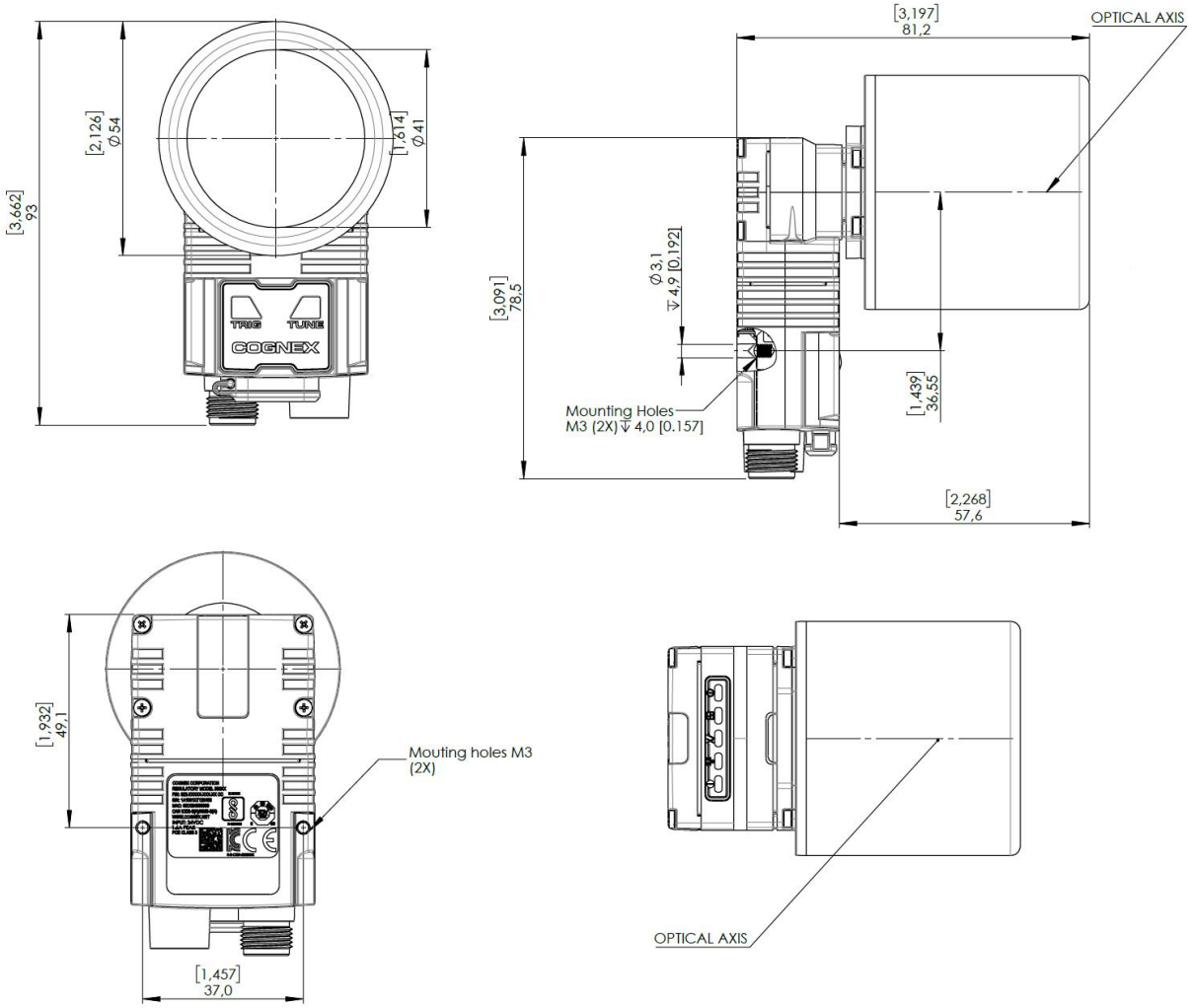
[3,662]
93
[2,126]
Ø54
[1,614]
Ø41
TRIG
TUNE
COGNEX
[3,197]
81,2
OPTICAL AXIS
[3,091]
78,5
Ø3,1
↧4,9 [0.192]
Mounting Holes
M3 (2X) ↧ 4,0 [0.157]
[1,439]
36,55
[2,268]
57,6
[1,932]
49,1
Mouting holes M3
(2X)
[1,457]
37,0
OPTICAL AXIS

Field of View and Working Distance

This section provides the Field of View (FoV) values for the IS2800 with Multi Torch, IS2800 Mini, and High-Powered Illumination Accessory (HPIA) configurations. (*On the diagrams, the values at the top are in mm and the values at the bottom of the top values in the brackets are in inch*).

Note: The following values shown for FoV are calculated values, and might vary within a tolerance of ±10%.

In-Sight 2800 with Multi Torch and 8 mm Lens

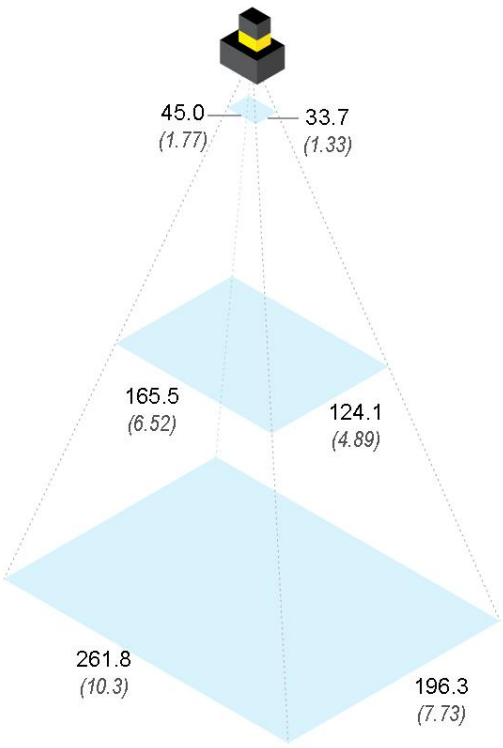

	Working Distance	Horizontal FOV	Vertical FOV
Minimum	50 mm (1.97 in)	45.0 mm (1.77 in)	33.7 mm (1.33 in)
Midpoint	300 mm (11.8 in)	165.5 mm (6.52 in)	124.1 mm (4.89 in)
Maximum	500 mm (19.69 in)	261.8 mm (10.3 in)	196.3 mm (7.73 in)

In-Sight 2800 with Multi Torch and 12 mm Lens

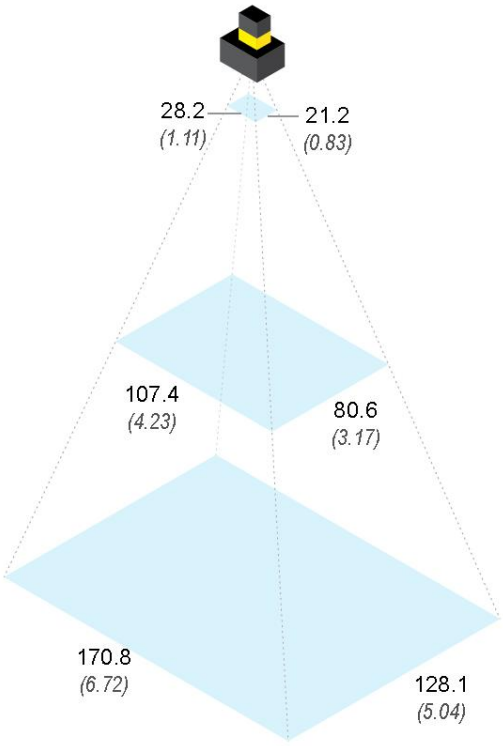

	Working Distance	Horizontal FOV	Vertical FOV
Minimum	50 mm (1.97 in)	28.2 mm (1.11 in)	21.2 mm (0.83 in)
Midpoint	300 mm (11.8 in)	107.4 mm (4.23 in)	80.6 mm (3.17 in)
Maximum	500 mm (19.69 in)	170.8 mm (6.72 in)	128.1 mm (5.04 in)

In-Sight 2800 with Multi Torch and 16 mm lens

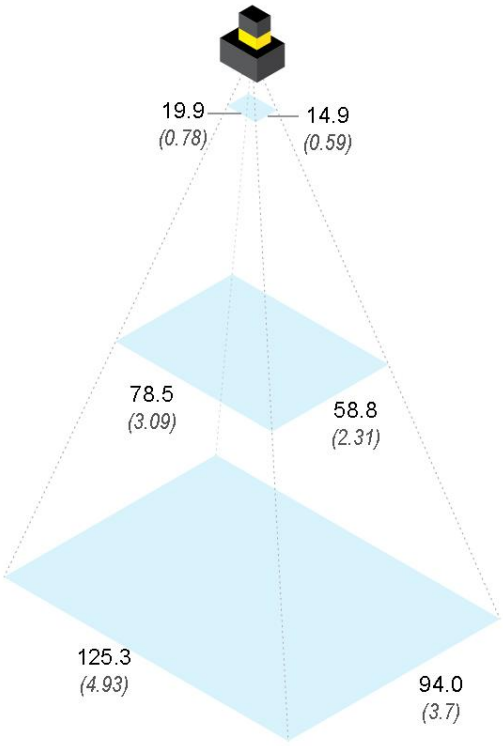

	Working Distance	Horizontal FOV	Vertical FOV
Minimum	50 mm (1.97 in)	19.9 mm (0.78 in)	14.9 mm (0.59 in)
Midpoint	300 mm (11.8 in)	78.5 mm (3.09 in)	58.8 mm (2.31 in)
Maximum	500 mm (19.69 in)	125.3 mm (4.93 in)	94.0 mm (3.7 in)

In-Sight 2800 Mini with 6.2 mm Lens

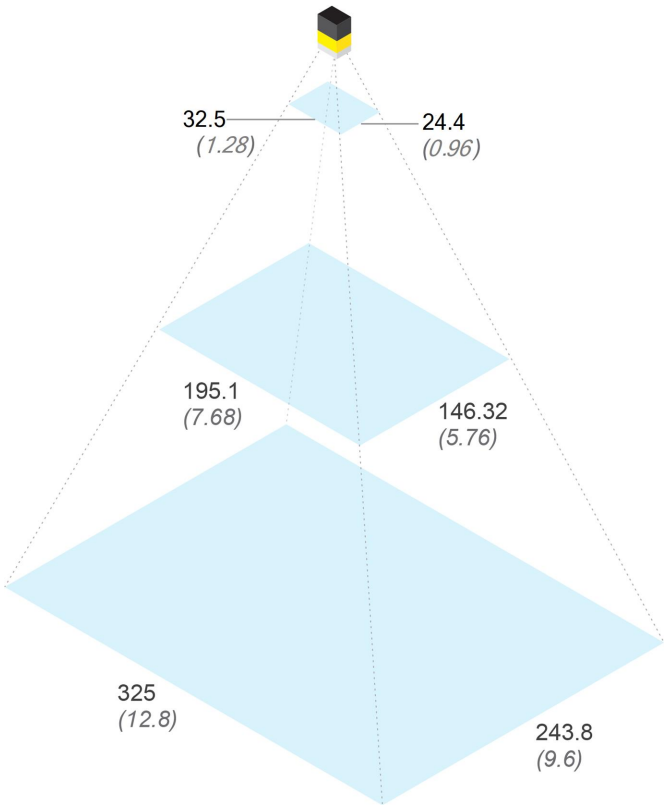

	Working Distance	Horizontal FOV	Vertical FOV
Minimum	50 mm (1.97 in)	32.5 mm (1.28 in)	24.4 mm (0.96 in)
Midpoint	300 mm (11.8 in)	195.1 mm (7.68 in)	146.3 mm (5.76 in)
Maximum	500 mm (19.69 in)	325 mm (12.8 in)	243.8 mm (9.60 in)

In-Sight 2800 Mini with 16 mm Lens

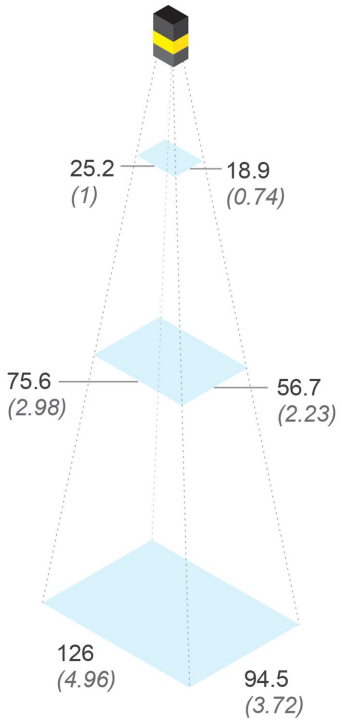

	Working Distance	Horizontal FOV	Vertical FOV
Minimum	100 mm (3.94 in)	25.2 mm (1 in)	18.9 mm (0.74 in)
Midpoint	300 mm (11.8 in)	75.6 mm (2.98 in)	56.7 mm (2.23 in)
Maximum	500 mm (19.69 in)	126 mm (4.96 in)	94.5 mm (3.72 in)

In-Sight 2800 with High-Powered Illumination Accessory (HPIA) and 6.2 mm Lens

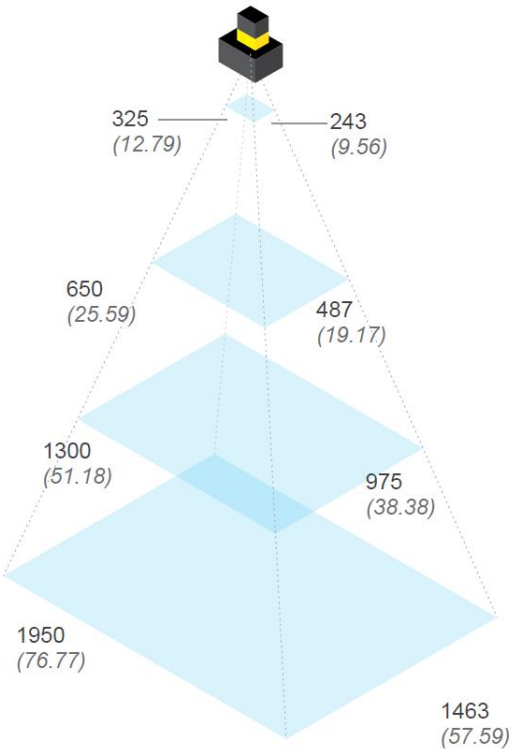

Working Distance	Horizontal FOV	Vertical FOV
500 mm (19.68 in)	325 mm (12.79 in)	243 mm (9.56 in)
1000 mm (39.37 in)	650 mm (25.59 in)	487 mm (19.17 in)
2000 mm (78.74 in)	1300 mm (51.18 in)	975 mm (38.38 in)
3000 mm (118.11 in)	1950 mm (76.77 in)	1463 mm (57.59 in)

For applications with a working distance of 2000 mm or more, Cognex recommends using the clear lens cover that comes with the In-Sight 2800 HPIA model.

In-Sight 2800 with High-Powered Illumination Accessory (HPIA) and 16 mm Lens

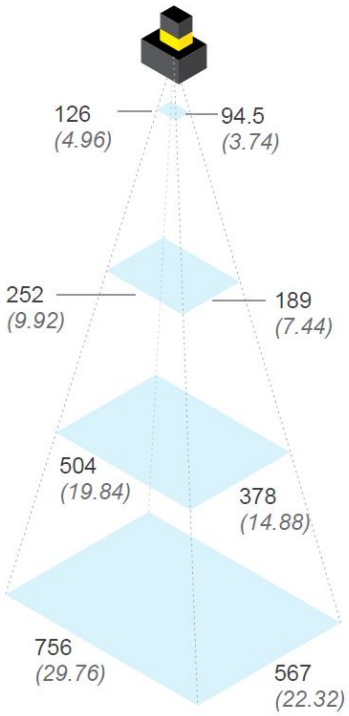

Working Distance	Horizontal FOV	Vertical FOV
500 mm (19.68 in)	126 mm (4.96 in)	94.5 mm (3.74 in)
1000 mm (39.37 in)	252 mm (9.92 in)	189 mm (7.44 in)
2000 mm (78.74 in)	504 mm (19.84 in)	378 mm (14.88 in)
3000 mm (118.11 in)	756 mm (29.76 in)	567 mm (22.32 in)

For applications with a working distance of 2000 mm or more, Cognex recommends using the clear lens cover that comes with the In-Sight 2800 HPIA model.

In-Sight 2802 with 8 mm High Speed Liquid Lens

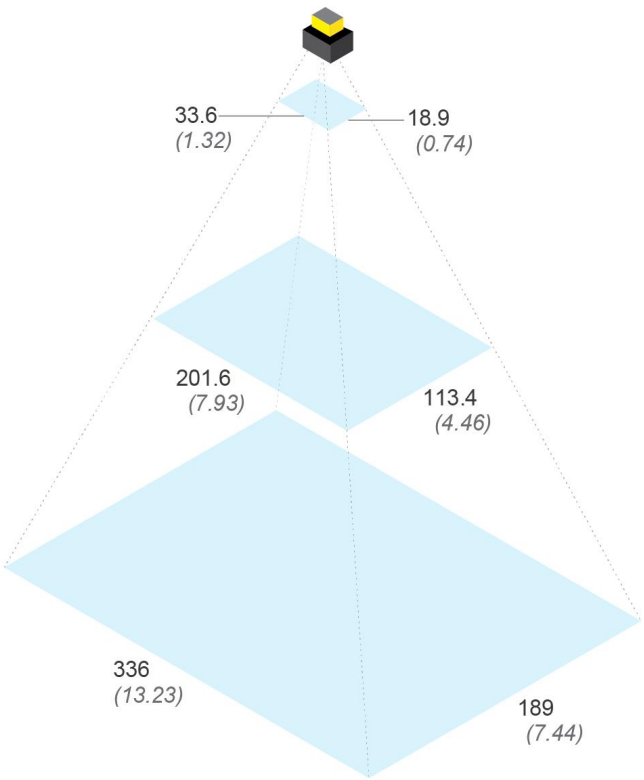

	Working Distance	Horizontal FOV	Vertical FOV
Minimum	50 mm (1.97 in)	33.6 mm (1.32 in)	18.9 mm (0.74 in)
Midpoint	300 mm (11.8 in)	201.6 mm (7.93 in)	113.4 mm (4.46 in)
Maximum	500 mm (19.69 in)	336 mm (13.23 in)	189 mm (7.44 in)

In-Sight 2802 with Multi Torch and 12 mm Lens

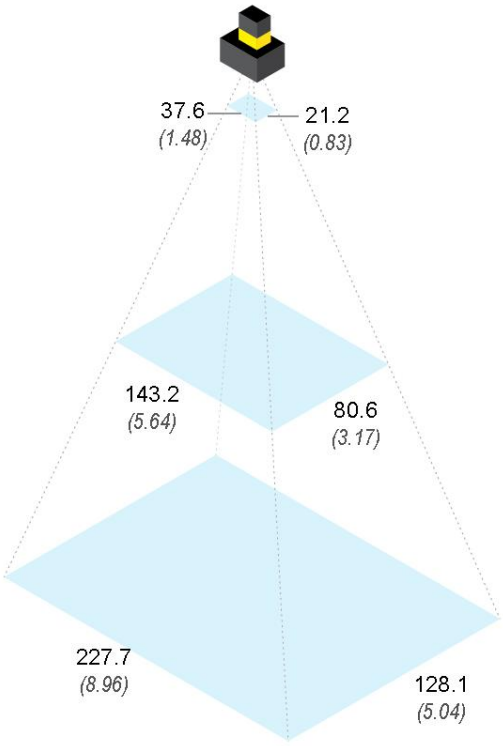

	Working Distance	Horizontal FOV	Vertical FOV
Minimum	50 mm (1.97 in)	37.6 mm (1.48 in)	21.2 mm (0.83 in)
Midpoint	300 mm (11.8 in)	143.2 mm (5.64 in)	80.6 mm (3.17 in)
Maximum	500 mm (19.69 in)	227.7 mm (8.96 in)	128.1 mm (5.04 in)

In-Sight 2802 with Multi Torch and 16 mm Lens

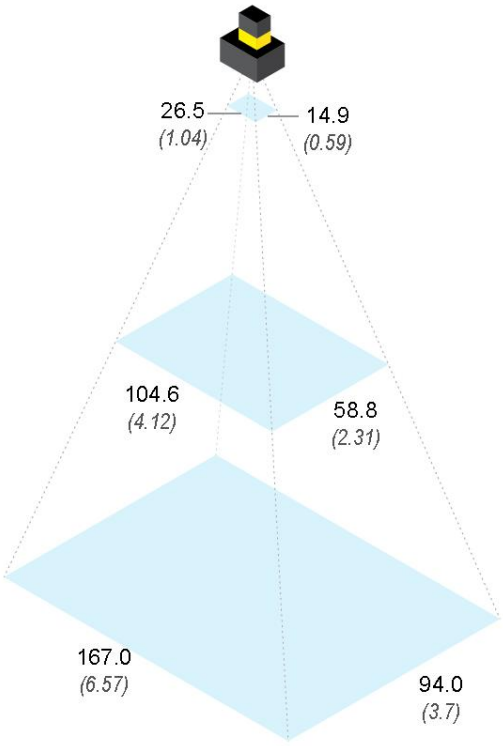

	Working Distance	Horizontal FOV	Vertical FOV
Minimum	50 mm (1.97 in)	26.5 mm (1.04 in)	14.9 mm (0.59 in)
Midpoint	300 mm (11.8 in)	104.6 mm (4.12 in)	58.8 mm (2.31 in)
Maximum	500 mm (19.69 in)	167.0 mm (6.57 in)	94.0 mm (3.7 in)

Installing and Changing Lenses

This section provides an overview about installing and changing different kinds of lenses.

Note: Use a Phillips screwdriver with drive size #1 for all Phillips screws that are reachable from the front side.

Note: Disconnect the vision system from power before changing lenses or mounts.

CAUTION: Perform all lens modification procedures in a dust-free and ESD safe area.

Installing Manual Lens on Multi Torch

1. Screw in the four screws from the adapter into the front of the housing.

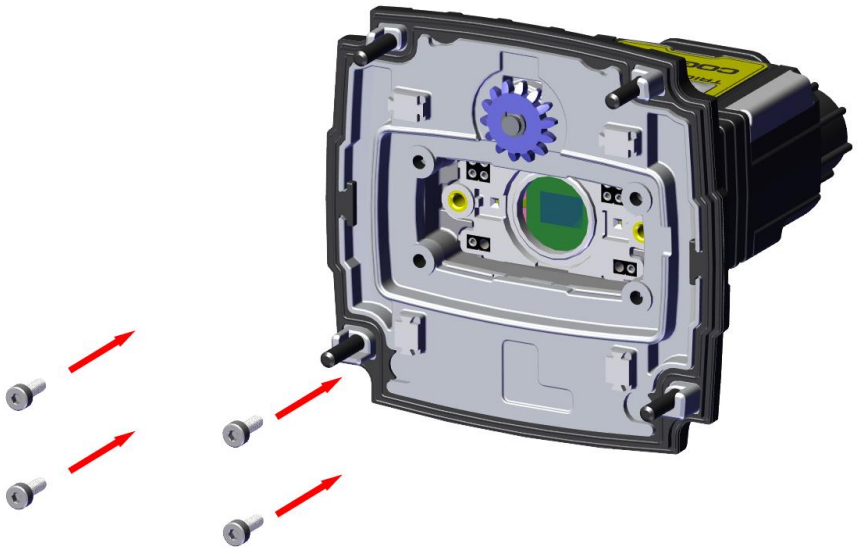

Note:
Observing the tightening sequence below, tighten all four M2 x 6 mm HSH screws to 0.25 Nm using a torque wrench.

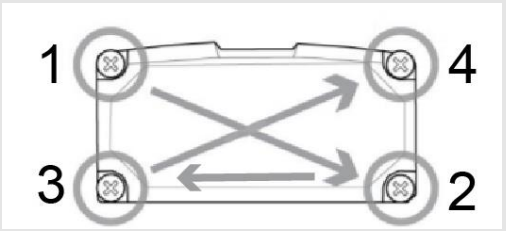

Note:
Make sure that the gasket is still present and flat between the adapter and the engine housing.

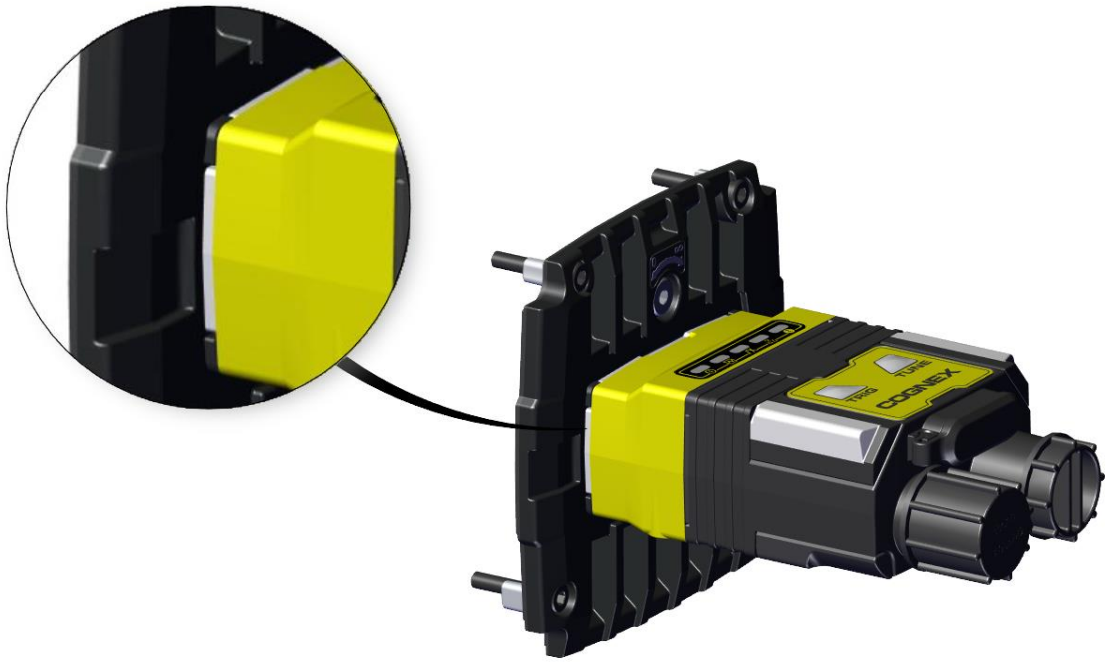

2. Install the manual lens subassembly to the unit.

    a. Push the six pins into the designated holes of the adapter and align the cylindrical flange to the center of the unit.

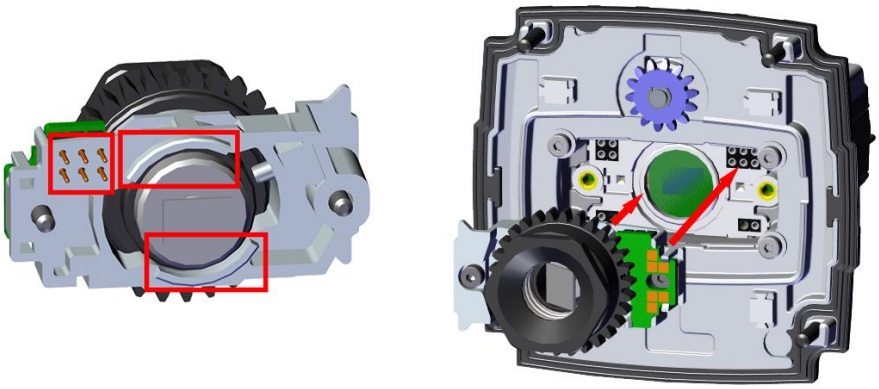

    b. Tighten the the M2 x 5 mm HSH screw halfway, then tighten the M2 x 12 mm HSH screw halfway as well. Continue screwing each screw incrementally, tightening them to 0.3 Nm using a torque wrench.

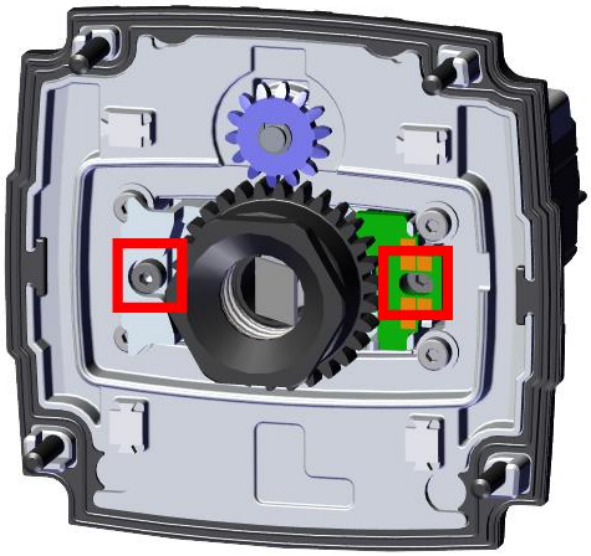

Note:
Make sure that the gear teeth mesh properly and that the contact pads are clean, and free of dust and grease.

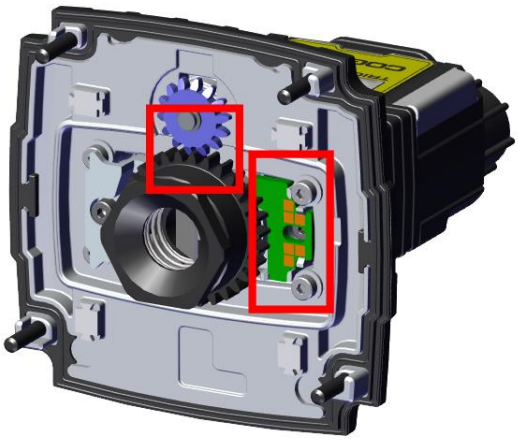

3. Screw in the four screws from the adapter into the back of the light module housing.

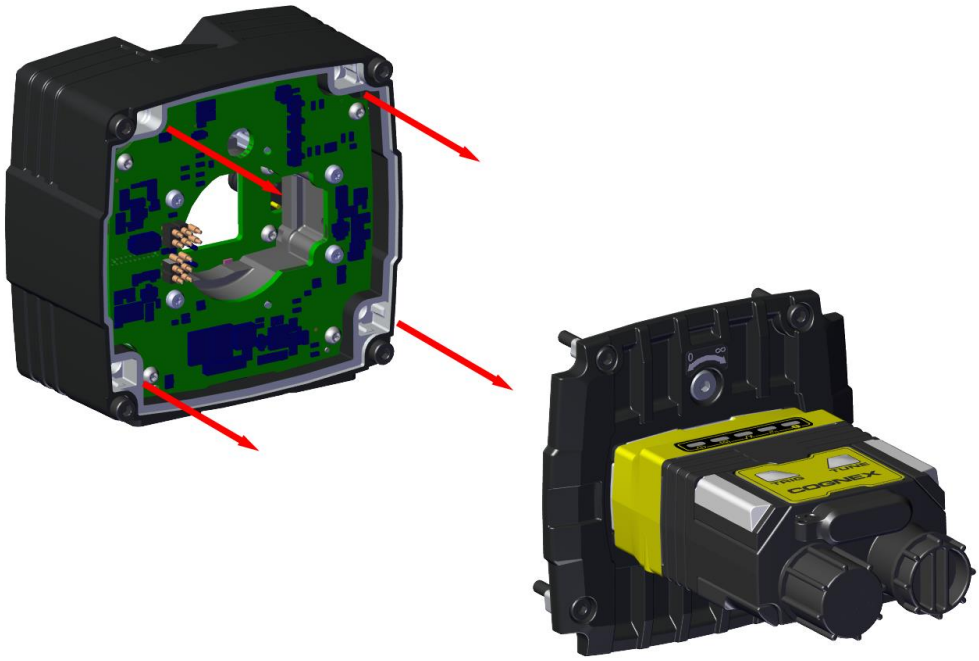

Note:
Observing the tightening sequence below, tighten all four M2.5 x 13 mm HSH screws to 0.25 Nm using a torque wrench.

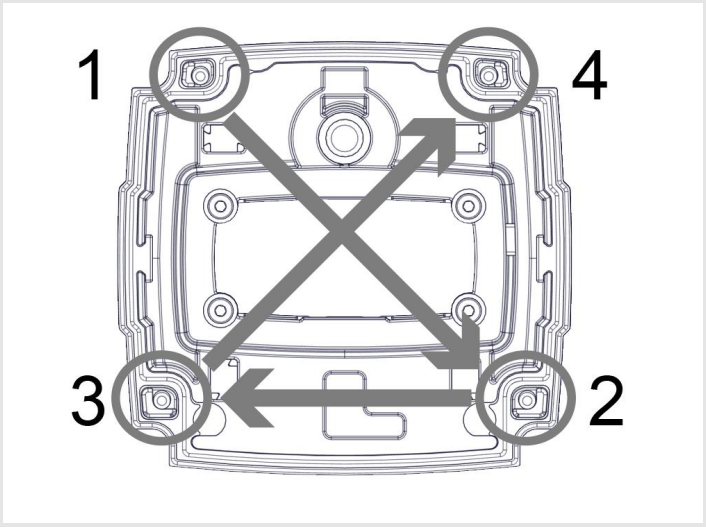

4. Screw in the four screws from the light module into the front cover.

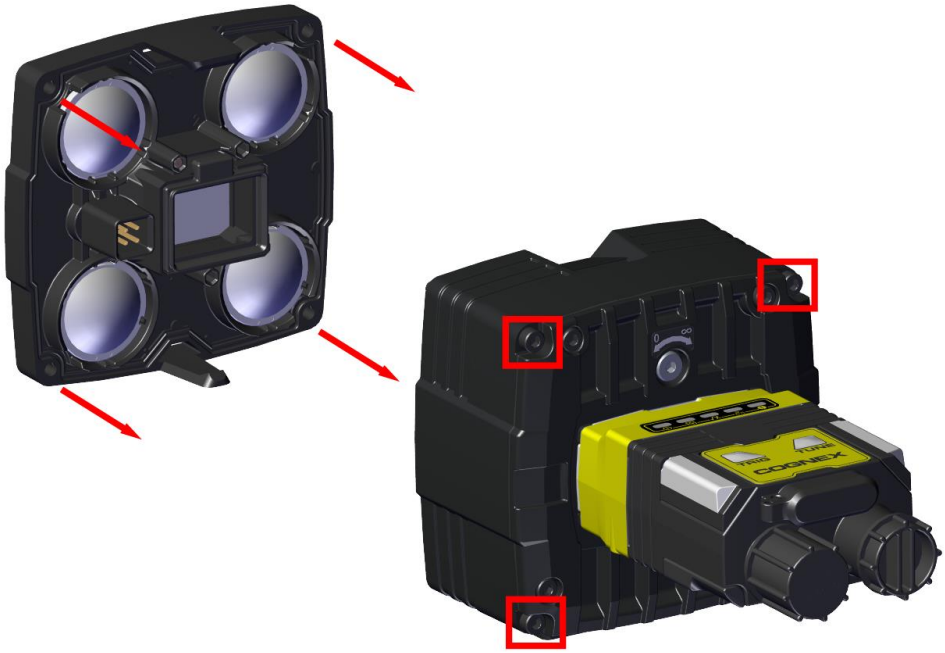

Note:
Observing the tightening sequence below, tighten all four M2.5 x 34 mm HSH screws to 0.25 Nm using a torque wrench.

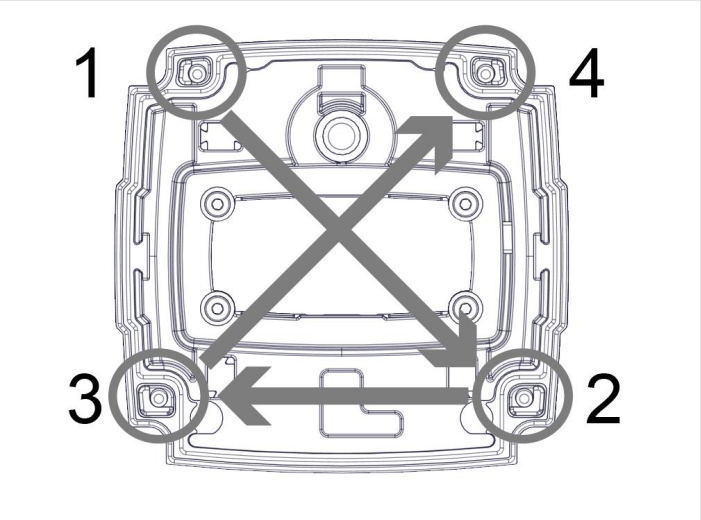

Changing Front Cover on Multi Torch

1. Unscrew the four screws from the light module, then take off the front cover from the light module.

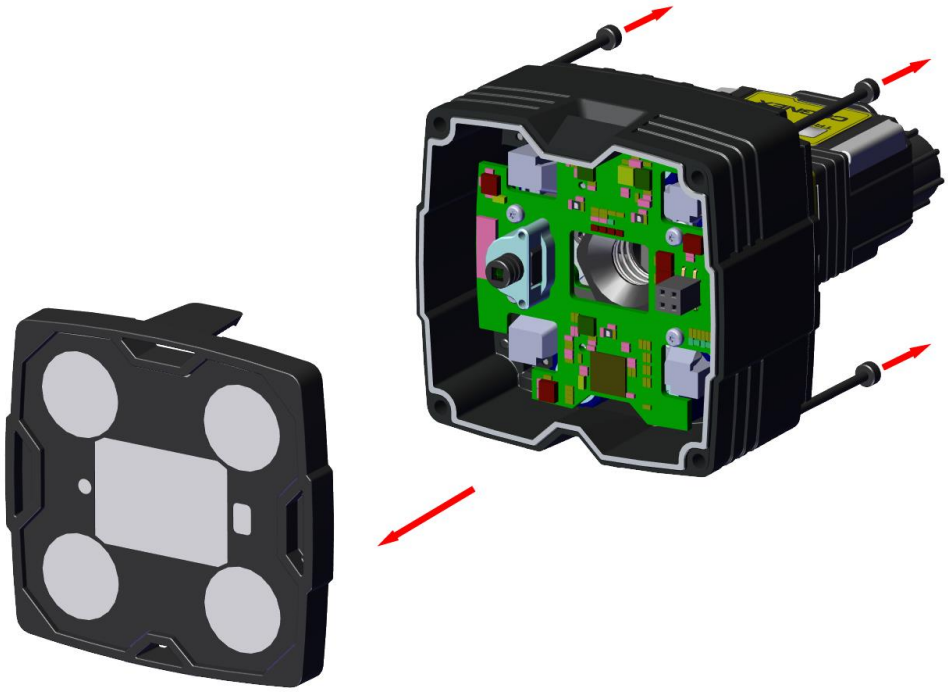

2. Attach the new front cover and screw in the four screws into the front cover.

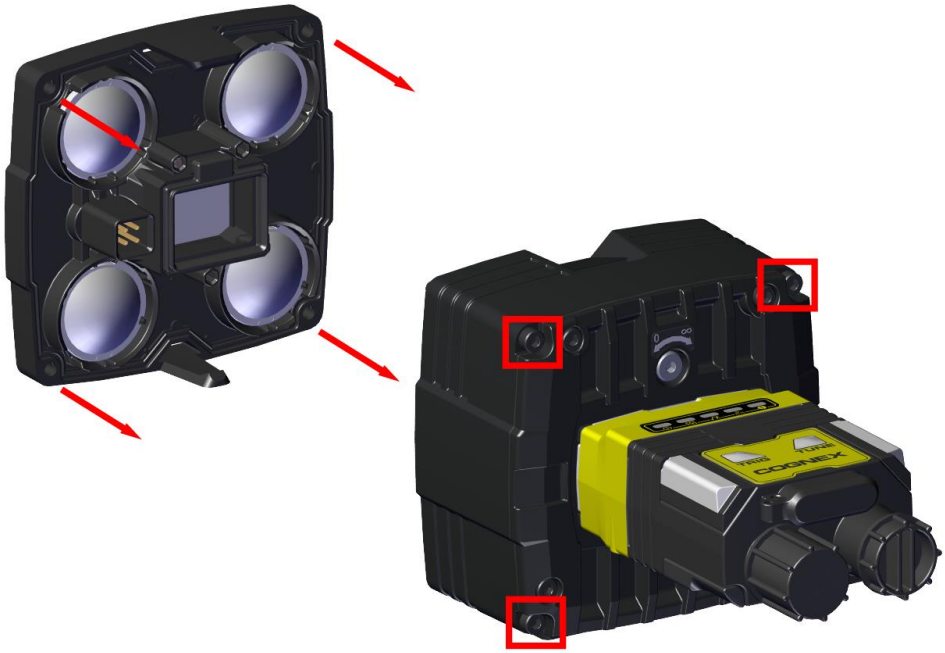

Note:
Observing the tightening sequence below, tighten all four M2.5 x 34 mm HSH screws to 0.25 Nm using a torque wrench.

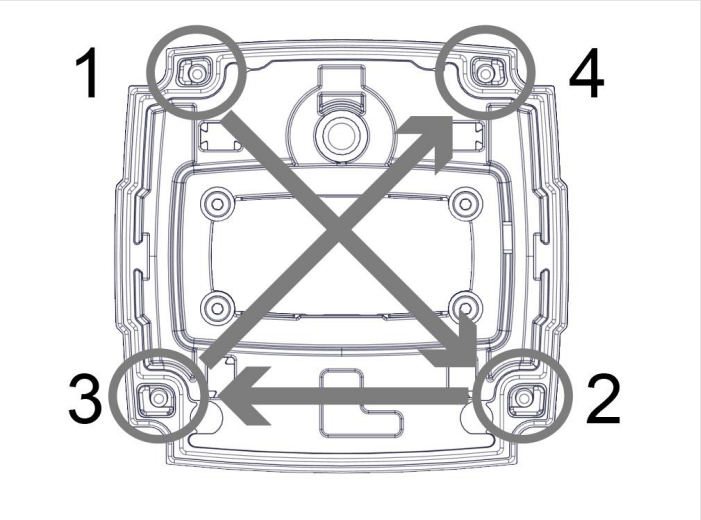

Changing M12 Lenses

1. Unscrew the four screws from the light module, then take off the light module from the adapter.

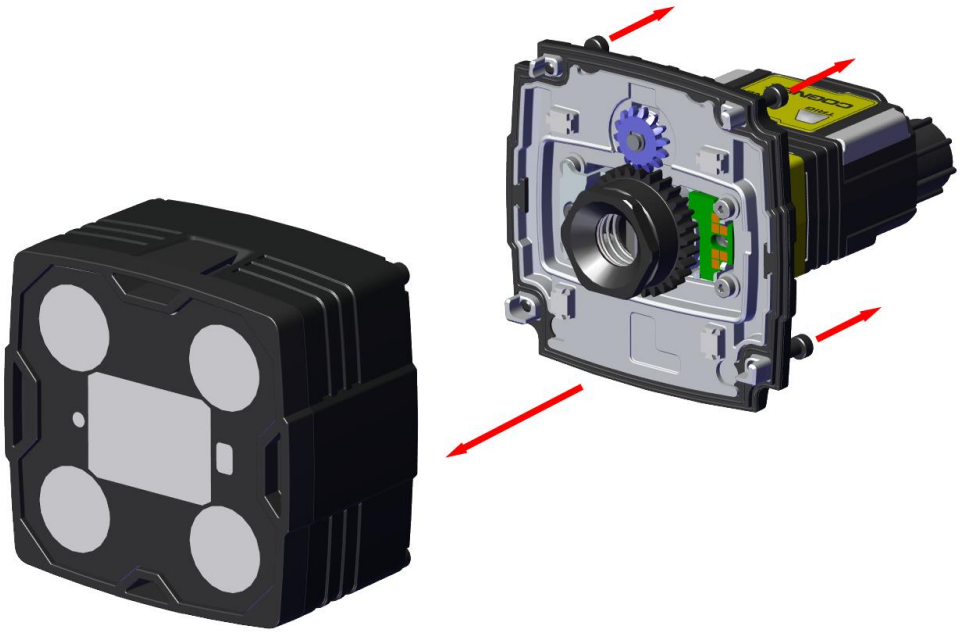

2. Unscrew the two screws from the housing using a 1.5 mm hex key.



Note: Start disassembling with unscrewing the M2 x 12 mm HSH screw on the left side. Continue unscrewing with the M2 x 5 mm HSH screw on the right side.

3. Swap out the lens from the unit.

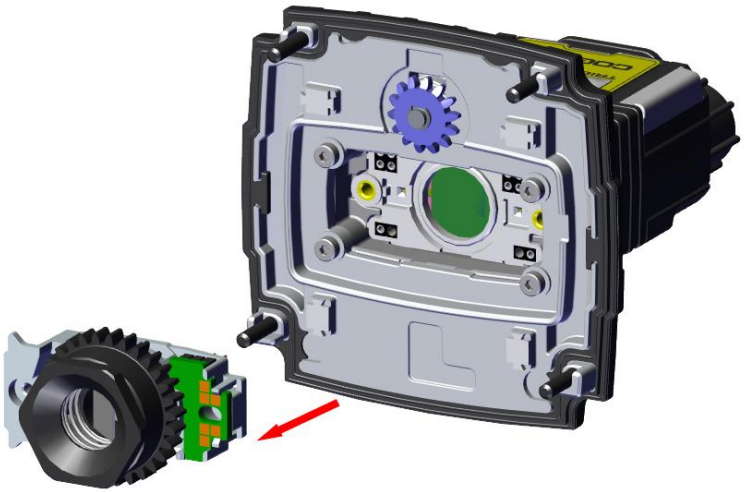

4. Install the new manual lens subassembly to the unit.

    a. Push the six pins into the designated holes of the adapter and align the cylindrical flange to the center of the unit.

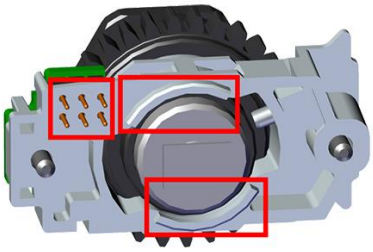

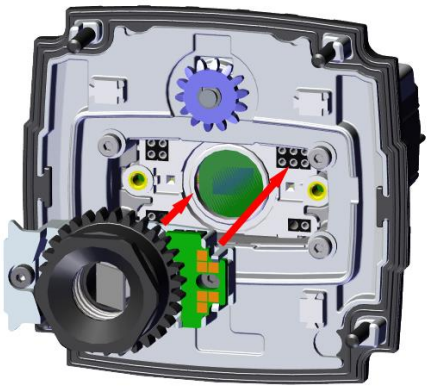

b. Tighten the the M2 x 5 mm HSH screw halfway, then tighten the M2 x 12 mm HSH screw halfway as well. Continue screwing each screw incrementally, tightening them to 0.3 Nm using a torque wrench.

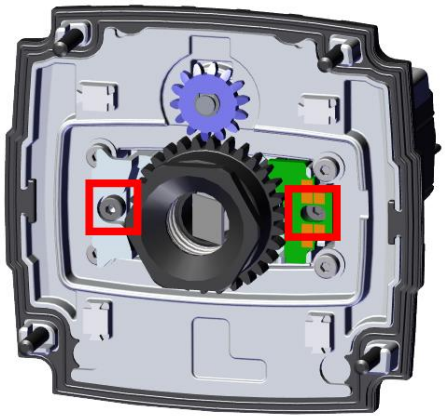

Note: Start reassembling with the M2 x 5 mm HSH screw on the right side.

Note:
Make sure that the gear teeth mesh properly and that the contact pads are clean, and free of dust and grease.

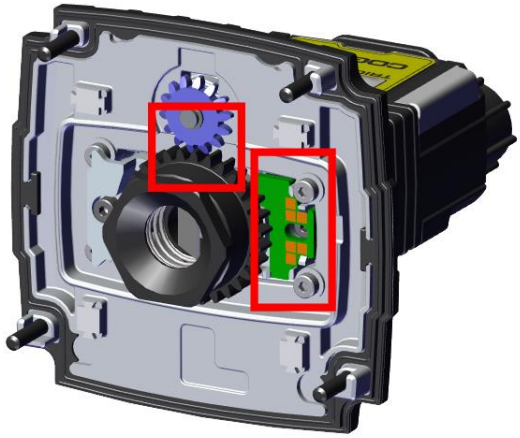

5. Screw in the four screws from the adapter into the back of the light module housing.

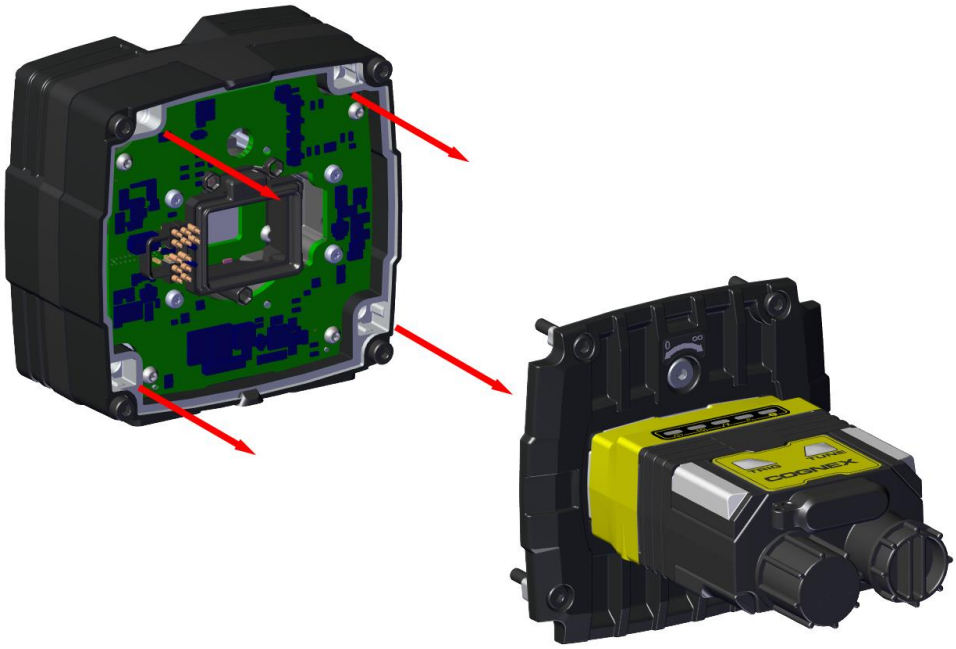

Note:
Observing the tightening sequence below, tighten all four M2.5 x 13 mm HSH screws to 0.25 Nm using a torque wrench.

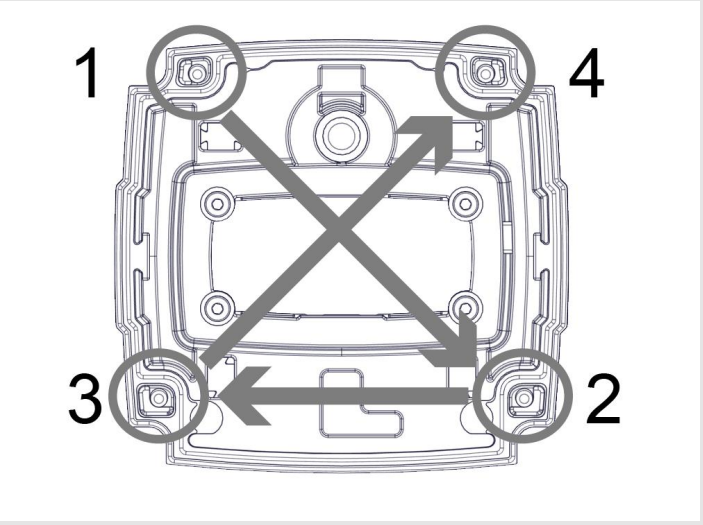

Set the Focus Position for M12 Lens

Adjust the focus on the back of the light module. Turn the screw clockwise to focus at a shorter distance, or counter-clockwise to focus at a longer distance.



Connecting the Vision System



1	*Mounting the Vision System* on page 56
2	*Connecting the Ethernet Cable* on page 57
3	*Connecting the Power and I/O Breakout Cable* on page 58

Mounting the Vision System

The vision system provides mounting holes for attachment to a mounting surface.

⚠ CAUTION: The vision system has to be grounded, either by mounting the vision system to a fixture that is electrically grounded or by attaching a wire from the vision system's mounting fixture to frame ground or Earth ground. If a ground wire is used, it has to be attached to one of the four mounting points on the bottom plate of the vision system and not to the mounting points on the front of the vision system.

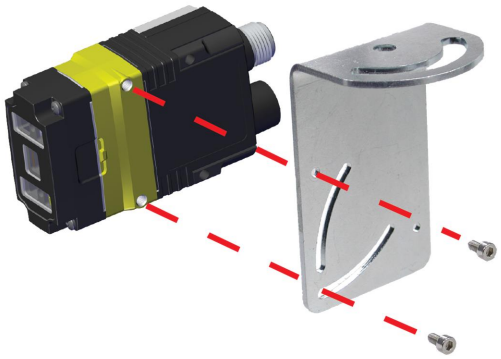

Align the holes on the mounting surface with the mounting holes on the vision system. Insert the M3X3.5 screws into the mounting holes.

ⓘ **Note**:
Mounting the vision system at a slight angle (15°) reduces reflections and improves performance.

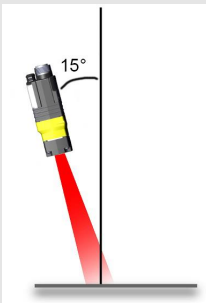

Connecting the Ethernet Cable

CAUTION: The Ethernet cable shield has to be grounded at the far end. If the far end device is not grounded, add a ground wire in compliance with local electrical codes. The cable is typically plugged into a switch or router, which has to have a grounded Ethernet connector. Use a digital voltmeter to validate the grounding.

1. Connect the M12 connector of the Ethernet cable to the vision system ENET connector.
2. Connect the RJ-45 connector of the Ethernet cable to a switch/router or PC, as applicable.

Note: Besides powering the vision system through a Breakout Cable, it is possible to power through PoE (Power over Ethernet) connection as well, in which case it is not necessary to use a Breakout Cable.
IS2800 Mini configurations support PoE connection. The Multi Torch configuration does not support PoE connection.

Connecting the Power and I/O Breakout Cable

⚠ **CAUTION**: To reduce emissions, connect the far end of the Breakout cable shield to frame ground.

Note:

- Perform wiring or adjustments to I/O devices when the vision system is not receiving power.
- You can clip unused wires short or use a tie made of non-conductive material to tie them back. Keep bare wires separated from the +24 V DC wire.

1. Verify that the 24 V DC power supply is unplugged and not receiving power.
2. Attach the +24 V DC connector of the Power and I/O Breakout cable and Ground wires to the corresponding terminals on the power supply. For more information, see *Specifications* on page 63.
3. Attach the M12 connector of the Power and I/O Breakout Cable to the 24 V DC connector of the vision system.
4. Restore power to the 24 V DC power supply and turn it on if necessary.

Indicator LEDs

The table summarizes the functions of the indicator LEDs on In-Sight 2800 vision systems.

Indicator	Color/Status	Meaning
Ring LED indicator	GREEN, blinking	Light edges blink in GREEN when the vision system produces a pass result. **Note**: In case of a pass result, the Pass/Fail indicator LED is also blinking in GREEN.
	RED, blinking	Light edges blink in RED when the vision system produces a fail result when it does not find a decoding after a timeout. **Note**: In case of a fail result, the Pass/Fail indicator LED is also blinking in RED.
	WHITE	Light edges are WHITE when you trigger the Identify function in In-Sight Vision Suite.
Power LED indicator	ON	The vision system is ON.
	OFF	The vision system is OFF.
	RED, blinking	The power supply is insufficient for the attached illumination accessory. The In-Sight 2800 vision system requires a 24 V DC power supply to operate the illumination accessory.
Train/Trigger status LED indicator	ON	If the vision system has a trained code, this LED is GREEN.
	OFF	If the vision system has no trained code, this LED is OFF.
Pass/Fail LED indicator	GREEN, blinking	The vision system produces a pass result. **Note**: In case of a pass result, light edges are also blinking in GREEN.
	RED, blinking	The vision system produces a fail result when it does not find a decoding after a timeout. **Note**: In case of a fail result, light edges are also blinking in RED.

Indicator	Color/Status	Meaning
Communication LED indicator	ON	This LED is ON when the In-Sight 2800 established the Ethernet connection. The Communication LED indicator blinks when the vision system detects network traffic. The color of the LED depends on the network speed: • RED: 10 Mbps or below • YELLOW: 10 Mbps to 100 Mbps • GREEN: 1000 Mbps **Note**: The vision system monitors network speed and updates the Communication LED every 50 ms.
	OFF	This LED is OFF when there is no Ethernet connection.
Error	ON	This LED is ON when the In-Sight 2800 vision system detects an error.

Using Your In-Sight 2800 Vision System

This section provides information on the installation of the In-Sight Vision Suite, trigger types, and protocols.

Installing the In-Sight Vision Suite

Follow the steps below to install and connect your vision system to the In-Sight Vision Suite.

1. Download the latest version of the In-Sight Vision Suite from support.cognex.com/ and follow the on-screen steps.
2. Connect the 2800 series vision system to your PC.
3. Launch the In-Sight Vision Suite and click **Refresh**.
4. Select a vision system from the list and click **Connect**.

Trigger Types

The In-Sight 2800 vision systems support the following trigger modes:

- **Self**: The vision system acquires an image and runs the job continuously at a time interval you configure.
- **Single** (external trigger): Acquires a single image and runs the current job on the acquired image. The vision system relies on an external trigger source.

Industrial Protocols

The vision system supports the following industrial protocols:

- EtherNet/IP™, EDS and PLC
- PROFINET (Class B)
- SLMP Protocol
- TCP/IP
- OPC/UA
- FTP

For more information, see **Industrial Communications** in the *In-Sight Spreadsheet Help* documentation.

Specifications

The following sections list general specifications for the vision system.

In-Sight 2800 Vision System

Specification	In-Sight 2800
Weight	6.2 mm: 141 g 16 mm: 169 g Right angle configuration adds 50 g
Power	24 V DC +/- 10%, USB 5V 500mA
24 V Supply	24 V DC ± 10% LPS or NEC class 2
	Power consumption without USB device attached: • Average ≤ 5 W using High-Powered Light • Average ≤ 6 W using High Frequency High-Powered Light • Peak ≤ 1.6 A using internal illumination
Operating Temperature	0-40°C (32-104°F)
Storage Temperature	-10-60°C (14-140°F)
Humidity	<95% non-condensing
Environmental	IP67 **Note**: IP67 rating applies only if all blind plugs and cables are attached properly, or the provided connector plug is installed. Also, make sure that the IP67-rated cover is installed properly.
Shock (Shipping and Storage)	IEC 60068-2-27: 1000 shocks, semi-sinusoidal, 11 g, 10 ms ISTA-1A Standardized Testing - Packaged Products 150 lb or less
Vibration (Shipping and Storage)	IEC 60068-2-6: vibration test in each of the three main axis for 2 hours @ 10 Gs (10 to 500 Hz at 100m/s^2 / 15 mm) FedEx Vibration Testing for packaged products 150 lbs or less
RS-232	RxD, TxD according to TIA/EIA-232-F
High-Speed Outputs 0, 1, 2, 3	I_{MAX}: 50 mA
	V_{OL}: ≤ ± 3 V @ 50 mA
Inputs 0 (Trigger), 1, 2, 3	V_{IL}: ≤ ± 6 V
	V_{IH}: ≥ ± 12 V
	I_{TYP}: 4.2 mA @ 24 V
Ethernet	10/100/1000. Full duplex or half duplex.
Job Storage	7.8 GB

In-Sight 2800 Series Vision System Image Sensor

Specification	In-Sight 2800	In-Sight 2801	In-Sight 2802
Image Sensor	1/2.8-inch CMOS monochrome and color		
Image Sensor Properties	Pixel size: 2.8 µm (H) x 2.8 µm (V)		
Image Resolution (pixels)	720 x 540 (SVGA)	1440 x 1080 (1.6 mp)	1920 x 1080 pixels (2 mp)
Electronic Shutter Speed	Minimum exposure: 29 µs Maximum exposure: 10 ms (with internal illumination) Maximum exposure: 200 ms (with external illumination)		
Image Acquisition at Full Resolution	Up to 45 Hz		
Lens Type	Multi Torch: • Manual focus: 16 mm, 12 mm, 8 mm • Autofocus: 16 mm (High Speed Liquid Lens), 12 mm (High Speed Liquid Lens), 8 mm (High Speed Liquid Lens) High-Powered Illumination Accessory (HPIA): • Autofocus: 6.2 mm (High Speed Liquid Lens), 16 mm (High Speed Liquid Lens) IS2800 Mini: • Manual: 6.2 mm, 16 mm • Autofocus: 6.2 mm, 16 mm (High Speed Liquid Lens)		Multi Torch: • Manual focus: 16 mm, 12 mm • Autofocus: 16 mm (High Speed Liquid Lens), 12 mm (High Speed Liquid Lens) IS2800 Mini: • Autofocus: 6.2 mm (High Speed Liquid Lens)

Spectral Response Diagram

The following diagram represents the response of the vision system to different wavelengths of light.

In-Sight 2800, 2801, and 2802:

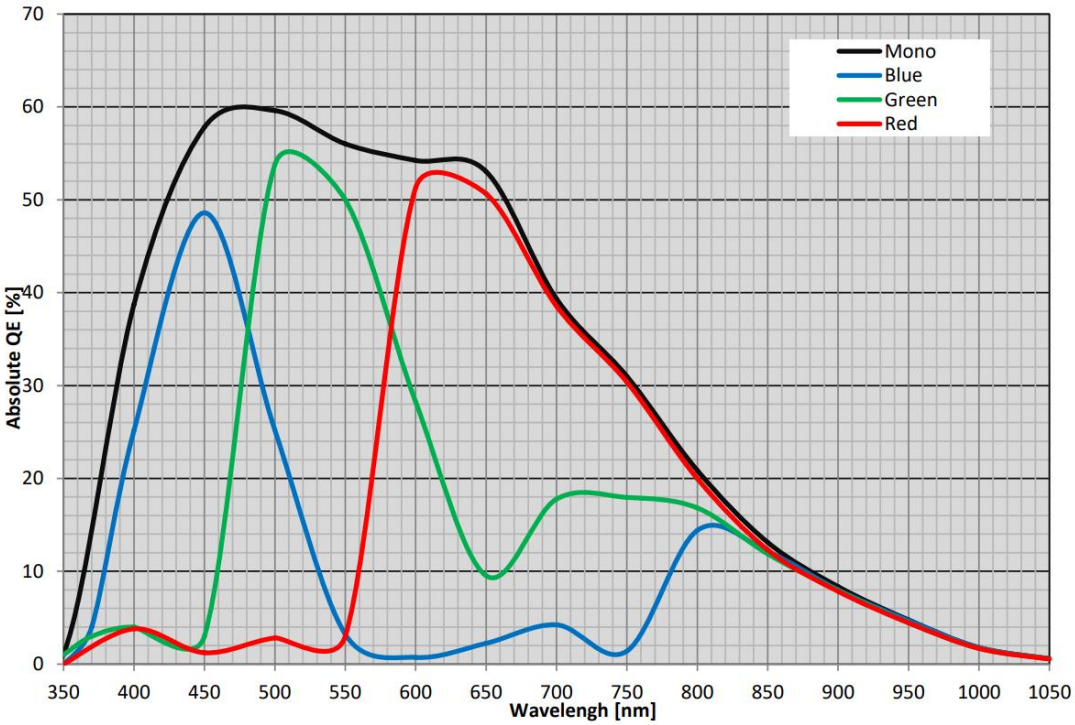
Mono
Blue
Green
Red
Absolute QE [%]
Wavelengh [nm]
0
10
20
30
40
50
60
70
350
400
450
500
550
600
650
700
750
800
850
900
950
1000
1050

LED and Laser Wavelengths

The following table shows LED types and the related peak wavelengths.

Model	LED	Wavelength
In-Sight 2800 Mini with 6.2mm Lens Illumination/with 16mm Lens and High Powered Illumination	White	Chromaticity coordinates acc. to CIE 1931 • Cx 0.34 (typ.) • Cy 0.33 (typ.)
	Blue	465 nm
	Red	617 nm
	IR	850 nm

In-Sight 2800 with Multi Torch Illumination	Multicolor	• 453 nm (blue)
		• 525 nm (green)
		• 625 nm (red)
		• Color temperature: 6740 Kelvin (white)
		Chromaticity coordinates acc. to CIE 1931
		  • Cx 0.31 (typ.)
		  • Cy 0.32 (typ.)

	IR	850 nm

Acquisition Trigger Input

The vision system features one acquisition trigger input, which is optically isolated. You can configure the acquisition trigger input to trigger from an NPN (current sinking) or PNP (current sourcing) device.

Specification	Description
Voltage	ON: 15 to 28 V DC (24 DC nominal) OFF: 0 to 5 V DC (11.5 V DC nominal threshold)
Current (Typical)	ON: 2.6 mA to 4.9 mA from 15 to 28 V Input OFF: <830 µA for < 5 V DC Resistance: ~6 kOhms
Delay	24 µs maximum latency between leading edge of trigger and start of aquisition. Input pulse should be a minimum of 1 ms wide.

- To trigger from an NPN type photoelectric sensor or PLC output, connect COMMON IN to +24 VDC and connect IN 0 to the output of the photoelectric sensor. When the output turns ON, it pulls TRIGGER down to 0 VDC, turning the opto-coupler ON.
- To trigger from a PNP photoelectric sensor or PLC output, connect IN 0 to the output of the photoelectric sensor and connect COMMON IN to 0 VDC. When the output turns ON, it pulls TRIGGER up to +24 VDC, turning the opto-coupler ON.

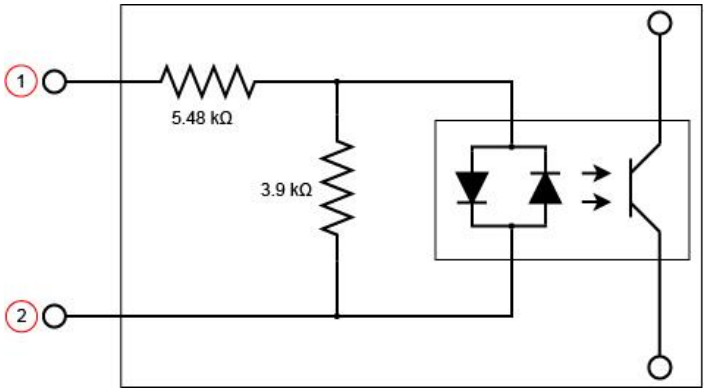

Number	Input
1	IN 0
2	COMMON IN

High-Speed Outputs

Specification	Description
Voltages	V_{MAX}: 26 VDC through external load V_{OL}: ≤ ± 3 V @ 50 mA
Current	I_{MAX}: 50 mA maximum sink or source current
	Each line is protected against over-current, short circuits and transients from switching inductive loads. High current inductive loads require an external protection diode.

For NPN lines, the external load should be connected between the output and the positive supply voltage (< 26 VDC). The output pulls down to less than 3 VDC when ON, which causes current to flow through the load. When the output is OFF, no current flows through the load.

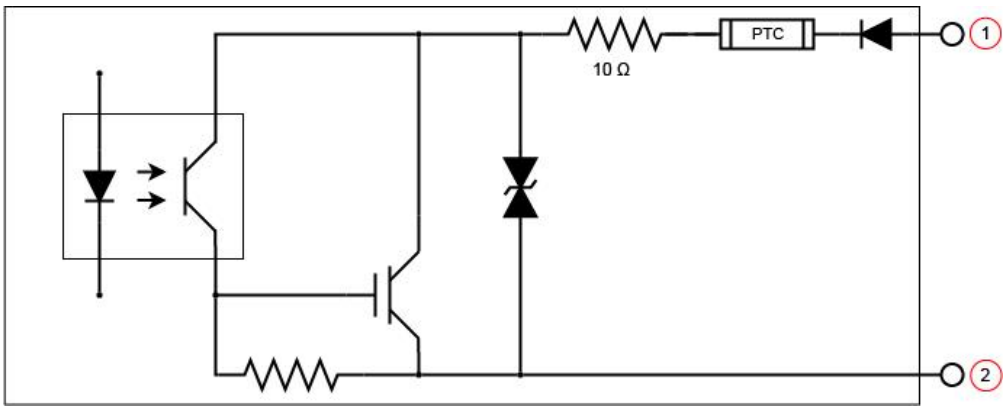

Number	Output
1	NPN OUT
2	COMMON OUT

For PNP lines, the external load should be connected between the output and the negative supply voltage (0 VDC). When connected to a 24 VDC power supply, the output pulls up greater than 21 VDC when ON, and current flows through the load. When the output is OFF, no current flows through the load.

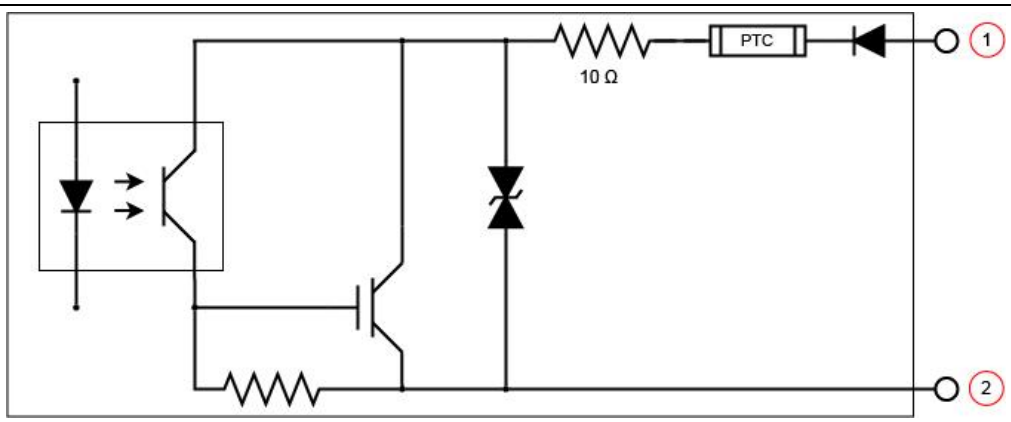

Number	Output
1	COMMON OUT
2	PNP OUT

High Speed Output Wiring

To connect to an NPN-compatible PLC input, connect one of the vision system's high-speed outputs directly to the PLC input. When enabled, the output pulls the PLC input down to less than 3 VDC.

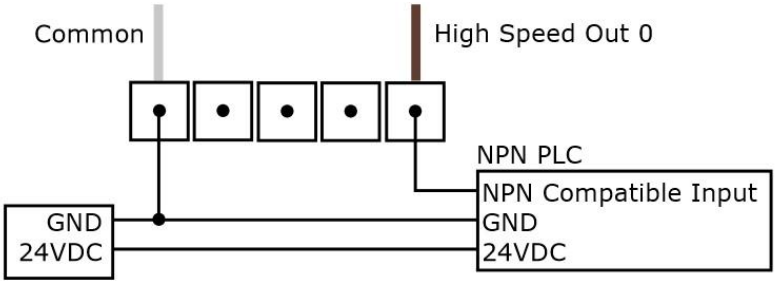

To connect to a PNP-compatible PLC input, connect one of the vision system's high-speed outputs directly to the PLC input. When enabled, the output pulls the PLC input up to greater than 21 VDC.

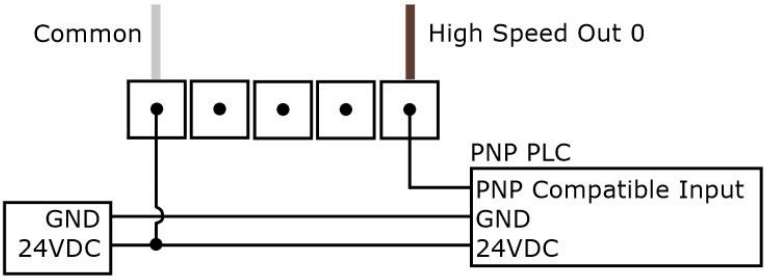

To connect the high-speed outputs to a relay, LED or similar load, connect the negative side of the load to the output and the positive side to +24VDC. When the output switches on, the negative side of the load is pulled down to less than 3 VDC, and 21 VDC appears across the load. Use a protection diode for a large inductive load, with the anode connected to the output and the cathode connected to +24 VDC.

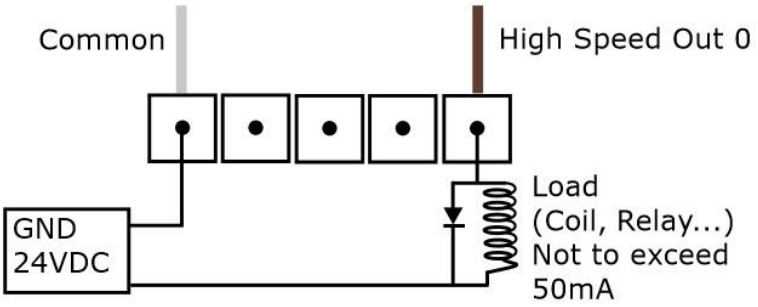

Ethernet Cable

The Ethernet cable provides Ethernet connectivity to the vision system. The Ethernet cable is used to connect the vision system to other network devices.

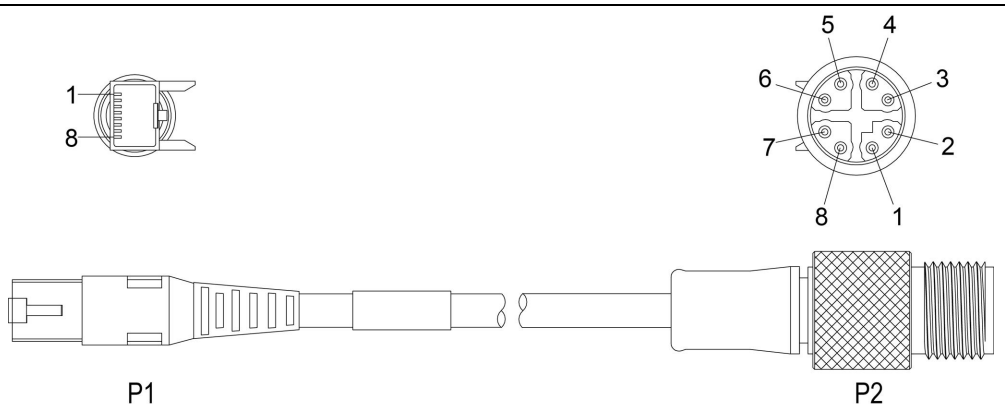

P1 Pin Number	Wire Color	Signal Name	P2 Pin Number
1	White/Orange	TxRx A +	1
2	Orange	TxRx A -	2
3	White/Green	TxRx B +	3
4	Blue	TxRx C +	8
5	White/Blue	TxRx C -	7
6	Green	TxRx B -	4
7	White/Brown	TxRx D +	5
8	Brown	TxRx D -	6

CAUTION: The Ethernet cable shield has to be grounded at the far end. If the far end device is not grounded, add a ground wire in compliance with local electrical codes. The cable is typically plugged into a switch or router, which has to have a grounded Ethernet connector. Use a digital voltmeter to validate the grounding.

Note:

- Cables are sold separately.
- The wiring for this cable follows standard industrial Ethernet M12 specifications. It differs from the 568B standard.

Power and I/O Breakout Cable Specifications

CCB-PWRIO-05

The Power and I/O Breakout cable provides access to trigger and high-speed outputs. For RS-232, use the Power Supply return path for ground.

The figure on the left shows the plug on the device.

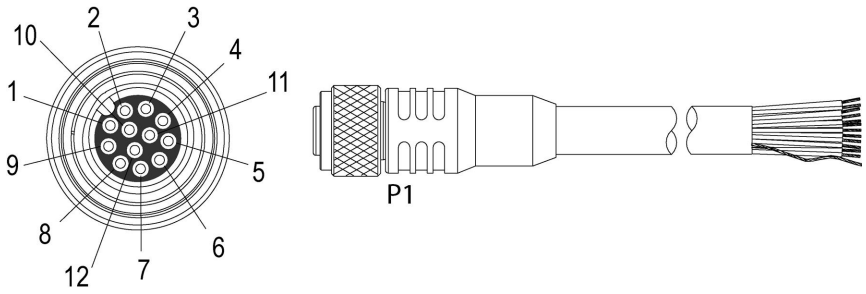

Pin#	Signal Names	Wire Color
1	Out 2/In 2	Yellow
2	TxD	White/Yellow
3	RxD	Brown
4	Out 3/In 3	White/Brown
5	In 1	Violet
6	Common In	White/Violet
7	+24 VDC	Red
8	GND	Black
9	Common Out	Green
10	In 0	Orange
11	Out 0	Blue
12	Out 1	Grey

Note:

- Cables are sold separately.
- Perform wiring or adjustments to I/O devices when the vision system is not receiving power.
- You can cut exposed wires short or trim wire ends. You also can tie the wires back if you use a tie made of non-conductive material. Keep bare wires separated from the +24 V DC wire.

Cleaning and Maintenance

Clean the Housing

To clean the outside of the vision system housing, use a small amount of mild detergent cleaner or isopropyl alcohol on a cleaning cloth. Do not pour the cleaner on the vision system housing.

⚠ CAUTION: Do not attempt to clean any In-Sight product with harsh or corrosive solvents, including lye, methyl ethyl ketone (MEK) or gasoline.

Clean the Vision System Image Sensor Window

To remove dust from the outside of the image sensor window, use a pressurized air duster. The air must be free of oil, moisture or other contaminants that could remain on the glass and possibly degrade the image. Do not touch the glass window. If oil or smudges remain, use a cotton bud and alcohol (ethyl, methyl, or isopropyl) to clean the window. Do not pour the alcohol on the window.

Clean the Vision System Lens Cover

To remove dust from the lens cover, use a pressurized air duster. The air must be free of oil, moisture or other contaminants that could remain on the lens cover. To clean the plastic window of the lens cover, use a small amount of isopropyl alcohol on a cleaning cloth. Do not scratch the plastic window. Do not pour the alcohol on the plastic window.

Regulations and Conformity

Note: For the most current CE and UKCA declaration and regulatory conformity information, see the Cognex support site: cognex.com/support.

In-Sight 2800 vision systems have Regulatory Model numbers 50208, 50210, 50215, 50216, and meet or exceed the requirements of all applicable standards organizations for safe operation. However, as with any electrical equipment, the best way to ensure safe operation is to operate them according to the agency guidelines that follow. Please read these guidelines carefully before using your device.

Safety and Regulatory	
Manufacturer	Cognex Corporation One Vision Drive Natick, MA 01760 USA
CE	In-Sight 2800 1.6 MP: Regulatory Model 50208 In-Sight 2800 1.6 MP L-shaped: Regulatory Model 50210 In-Sight 2800 2 MP: Regulatory Model 50215 In-Sight 2800 2 MP L-shaped: Regulatory Model 50216 This is a class A product. In a domestic environment this product may cause radio interference in which case the user may be required to take immediate measures. This equipment complies with the essential requirements of the EU Directive 2014/30/EU. Declarations are available from your local representative.
EU RoHS	Compliant to the most recent applicable directive.
FCC	FCC Part 15, Class A This equipment has been tested and found to comply with the limits for a Class A digital device, pursuant to part 15 of the FCC Rules. These limits are designed to provide reasonable protection against harmful interference when the equipment is operated in a commercial environment. This equipment generates, uses, and can radiate radio frequency energy and, if not installed and used in accordance with the instruction manual, may cause harmful interference to radio communications. Operation of this equipment in a residential area is likely to cause harmful interference in which case the user will be required to correct the interference at his own expense.
Korea KC	This device is certified for office use only and if used at home, there can be frequency interference problems. A급 기기(업무용 방송통신기자재): 이 기기는 업무용(A급) 전자파적합기기로서 판 매자 또는 사용자는 이 점을 주의하시기 바라 며, 가정외의 지역에서 사용하는 것을 목적으 로 합니다. In-Sight 2800 1.6 MP: R-R-CGX-50208 In-Sight 2800 1.6 MP L-shaped: R-R-CGX-50210 In-Sight 2800 2 MP: R-R-CGX-50215 In-Sight 2800 2 MP L-shaped: R-R-CGX-50216
TÜV	In-Sight 2800 1.6 MP: Regulatory Model 50208 In-Sight 2800 1.6 MP L-shaped: Regulatory Model 50210 In-Sight 2800 2 MP: Regulatory Model 50215 In-Sight 2800 2 MP L-shaped: Regulatory Model 50216
	NRTL: TÜV SÜD SCC/NRTL OSHA Scheme for UL/CAN 61010-1.
	CB report available upon request. TÜV SÜD, IEC/EN 61010-1.

Safety and Regulatory	
UK CA	In-Sight 2800 1.6 MP: Regulatory Model 50208 In-Sight 2800 1.6 MP L-shaped: Regulatory Model 50210 In-Sight 2800 2 MP: Regulatory Model 50215 In-Sight 2800 2 MP L-shaped: Regulatory Model 50216 This is a class A product. In a domestic environment this product may cause radio interference in which case the user may be required to take immediate measures. This equipment complies with the essential requirements of the Electromagnetic Compatibility Regulations 2016. Declarations are available from your local representative.

中国大陆RoHS (Information for China RoHS Compliance)

根据中国大陆《电子信息产品污染控制管理办法》(也称为中国大陆RoHS), 以下部份列出了本产品中可能包含的有毒有害物质或元素的名称和含量。



	Hazardous Substances 有害物质					
Part Name 部件名称	Lead (Pb) 铅	Mercury (Hg) 汞	Cadmium (Cd) 镉	Hexavalent Chromium (Cr (VI)) 六价铬	Polybrominated biphenyls (PBB) 多溴联苯	Polybrominated diphenyl ethers (PBDE) 多溴二苯醚
Regulatory Model 50208 Regulatory Model 50210 Regulatory Model 50215 Regulatory Model 50216	X	O	O	O	O	O

This table is prepared in accordance with the provisions of SJ/T 11364.
这个标签是根据SJ / T 11364 的规定准备的。

O: Indicates that said hazardous substance contained in all of the homogeneous materials for this part is below the limit requirement of GB / T26572 - 2011.
表示本部件所有均质材料中含有的有害物质低于GB / T26572 - 2011 的限量要求。

X: Indicates that said hazardous substance contained in at least one of the homogeneous materials used for this part is above the limit requirement of GB / T26572 - 2011.
表示用于本部件的至少一种均质材料中所含的危害物质超过GB / T26572 - 2011 的限制要求。

For European Community Users

Cognex complies with Directive 2012/19/EU OF THE EUROPEAN PARLIAMENT AND OF THE COUNCIL of 4 July 2012 on waste electrical and electronic equipment (WEEE).

This product has required the extraction and use of natural resources for its production. It may contain hazardous substances that could impact health and the environment, if not properly disposed.

In order to avoid the dissemination of those substances in our environment and to diminish the pressure on the natural resources, we encourage you to use the appropriate take-back systems for product disposal. Those systems will reuse or recycle most of the materials of the product you are disposing in a sound way.


The crossed out wheeled bin symbol informs you that the product should not be disposed of along with municipal waste and invites you to use the appropriate separate take-back systems for product disposal.

If you need more information on the collection, reuse, and recycling systems, please contact your local or regional waste administration.

You may also contact your supplier for more information on the environmental performance of this product.

Copyright © 2026
Cognex Corporation. All Rights Reserved.