COGNEX

# In-Sight® 2800 Series
## Quick Reference Guide




2026 September 24
Revision: 26.2.1.2

# Precautions

To reduce the risk of injury or equipment damage, observe the following precautions when you install the Cognex product:

- Connectivity is possible through the following options:
    - 24 VDC (+/- 10%) output connection using a UL or NTRL listed power supply

  Any other voltage creates a risk of fire or shock and can damage the components. Applicable national and local wiring standards and rules must be followed.
- This product is intended for industrial use in automated manufacturing or similar applications.
- The safety of any system incorporating this product is the responsibility of the assembler of the system.
- Do not install Cognex products where they are exposed to environmental hazards such as excessive heat, dust, moisture, humidity, impact, vibration, corrosive substances, flammable substances, or static electricity.
- Do not expose the image sensor to laser light. Image sensors can be damaged by direct, or reflected, laser light. If your application requires laser light that might strike the image sensor, use a lens filter at the corresponding laser wavelength. For suggestions, contact your local integrator or application engineer.
- Route cables and wires away from high-current wiring or high-voltage power sources to reduce the risk of damage or malfunction from the following causes: over-voltage, line noise, electrostatic discharge (ESD), power surges, or other irregularities in the power supply.

- Do not expose the image sensor to laser light. Image sensors can be damaged by direct, or reflected, laser light. If your application requires laser light that might strike the image sensor, use a lens filter at the corresponding laser wavelength. For suggestions, contact your local integrator or application engineer.
- This product does not contain user-serviceable parts. Do not make electrical or mechanical modifications to product components. Unauthorized modifications can void your warranty.
- Changes or modifications not expressly approved by the party responsible for regulatory compliance could void the user's authority to operate the equipment.
- Include service loops with cable connections.
- Ensure that the cable bend radius begins at least six inches from the connector. Cable shielding can be degraded or cables can be damaged or wear out faster if a service loop or bend radius is tighter than 10X the cable diameter.
- This device should be used in accordance with the instructions in this manual.
- All specifications are for reference purposes only and can change without notice.

# Symbols

The following symbols indicate safety precautions and supplemental information:



**WARNING:** This symbol indicates a hazard that could cause death, serious personal injury or electrical shock.



**CAUTION:** This symbol indicates a hazard that could result in property damage.



**Note**: This symbol indicates additional information about a subject.



**Tip**: This symbol indicates suggestions and shortcuts that might not otherwise be apparent.

# Accessories

You can purchase the following components separately. For a list of options and accessories, contact your local Cognex sales representative.

## Lenses

| Accessory | Product Number | Illustration |
|---|---|---|
| 12 mm Manual Focus Lens Module to be used with Multi Torch light | 280-TORCH-MAN12 |  |
| 16 mm Manual Focus Lens Module to be used with Multi Torch light | 280-TORCH-MAN16 | 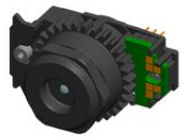 |
| Blue bandpass filter supported with IS2800 Mini with 6.2 mm lens illumination only | DM150-BP470 | 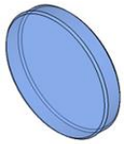 |
| Blue bandpass filter, 450 nm | 280-TORCH-BP450 |  |
| Red bandpass filter supported with IS2800 Mini with 6.2 mm lens illumination only | DM150-BP635 | 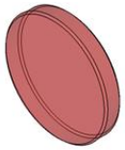 |
| Red bandpass filter, 635 nm | 280-TORCH-BP635 |  |

# Illumination

| Accessory | Product Number | Illustration |
|---|---|---|
| Red LED Light for 6.2 mm Lens (Risk Group Exempt acc. IEC 62471) | DM150-LED-RED | 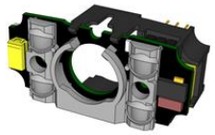 |
| White LED Light for 6.2 mm Lens (Risk Group Exempt acc. IEC 62471) | DM150-LED-WHT | |
| Blue LED Light for 6.2 mm Lens (Risk Group Exempt acc. IEC 62471) | DM150-LED-BLU | |
| High-Powered Red LED Light for 16 mm Lens (Risk Group Exempt acc. IEC 62471) For maximum light power 24 V DC supply is recommended. | 280-LED-REDHP |  |

**CAUTION:** 280-TORCH-MULTI devices equipped with a target aimer have been tested in accordance with IEC60825-1 3rd ed., 2014., and have been certified to be under the limits of a Class 2 Laser device.

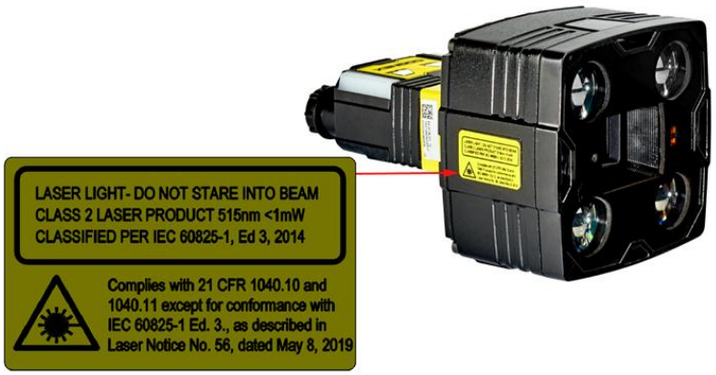

# Lens Covers

| Accessory | Product Number | Illustration |
|---|---|---|
| Standard front cover. Use with a 6.2 mm lens only. | DM280-CVR-62 |  |
| Standard front cover, fully-polarized.<br><br>Use with a 6.2 mm lens only. | DM280-LENS-62CVR-F | 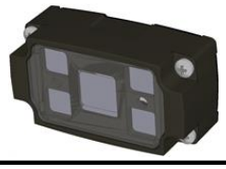 |
| Extended front cover. Use with a 16 mm lens only. | DM260-LENS-16CVR |  |
| Extended front cover, half-polarized. Use with a 16 mm lens only. | DM260-LENS-16CVR-P | |
| Extended front cover, fully-polarized. Use with a 16 mm lens only. | DM260-LENS-16CVR-F | |
| Cross-polarized cover for Multi Torch | 280-TORCH-COVPOL |  |
| Clear cover for Multi Torch | 280-TORCH-COVCLR | |
| Diffuse cover for Multi Torch | 280-TORCH-COVDIF | |

| Accessory | Product Number | Illustration |
|---|---|---|
| Dome Diffuser cover for Multi Torch | 280-TORCH-<br>DOME |  |

**CAUTION**: For 280-TORCH-COVPOL, 280-TORCH-COVCLR, and 280-TORCH-COVDIF equipped with a Time-of-Flight sensor, the device has been tested to be under the limits of a Class 1 Laser device.



# Mounting Brackets

| Accessory | Product Number | Illustration |
|---|---|---|
| Universal mounting bracket | DM100-UBRK-000 |  |
| Pivot mounting bracket | DM100-PIVOTM-01 |  |
| Tilted angle pivot bracket | DMBK-DMPIVOT-00 | 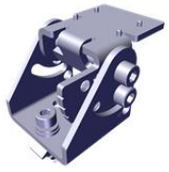 |
| Flat surface mounting plate adapter for Multi Torch configuration | 280-BKT-ADAPT |  |

# Cables

**Note**: Cables are sold separately.

| Accessory | Product Number | Illustration |
|---|---|---|
| Ethernet Cable, X-coded M12-8 to RJ-45 | CCB-84901-2001-xx (straight, xx specifies length: 2m, 5m, 10m, 15m, 30m) |  |
| Ethernet Cable, X-coded M12-8 to RJ-45 | CCB-84901-2002-xx (right-angled, xx specifies length: 2m, 5m, 10m) |  |
| Ethernet Cable, Robotic X-Coded M12-8 to RJ-45 | CCB-84901-2RBT-xx (straight, xx specifies length: 2m, 5m, 10m) |  |
| X-Coded to A-Coded Ethernet cable adapter, 0.5 m | CCB-M12X8MS-XCAC |  |
| Power and I/O Breakout Cable, M12-12 to Flying Lead | CCB-PWRIO- xx (straight, xx specifies length: 5m, 10m, 15m) |  |
| Power and I/O Breakout Cable, M12-12 to Flying Lead | CCB-PWRIO-xxR (right-angled, xx specifies length: 5m, 10m, 15m) |  |
| I/O Module Cable | CCB-PWRIO-MOD-xx (xx specifies length: 2m, 5m) |  |
| RS-232 Connection Cable | CCB-M12xDB9Y-05 |  |

| Accessory | Product Number | Illustration |
|---|---|---|
| I/O Extension Cable | CKR-200-CBL-EXT |  |
| Lighting Cable, Y Split of Power/IO | CCB-M12-IVSL-Y |  |

# Setting Up Your In-Sight 2800 Vision System

Read this section to learn how the vision system connects to its standard components and accessories.

**Note**:

- Cables are sold separately.
- If a standard component is missing or damaged, immediately contact your Cognex Authorized Service Provider (ASP) or Cognex Technical Support.

**CAUTION:** All cable connectors are keyed to fit the connectors on the vision system. Do not force the connections or damage may occur.

## Vision System Layout

The image and table below shows the elements of the vision system.

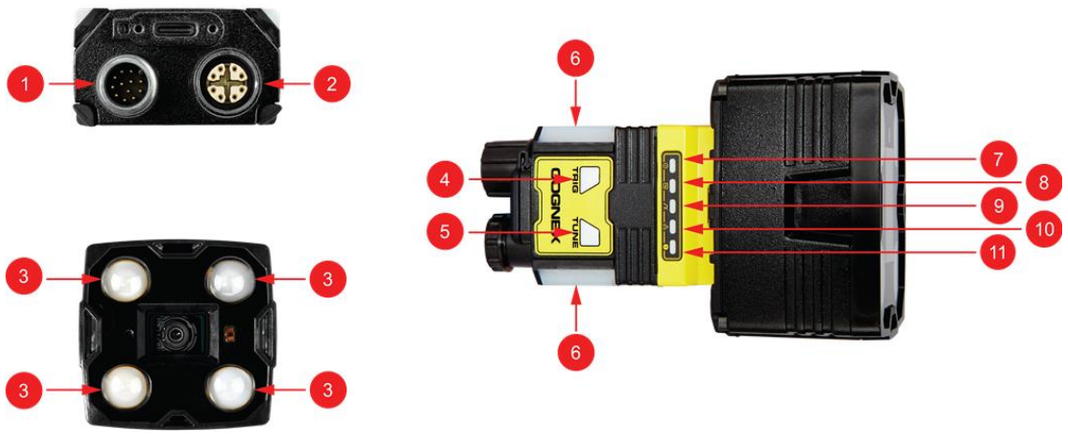


| Number | Description |
|---|---|
| 1 | Power I/O Breakout cable connector |

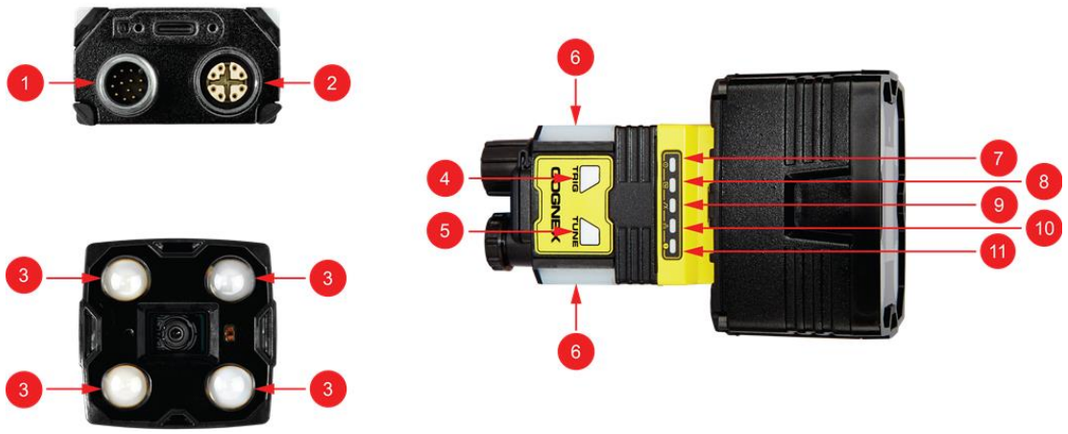


| Number | Description |
|---|---|
| 2 | Ethernet connector |
| 3 | Illumination LEDs |
| 4 | Trigger button<br>**Note**: The Trigger button is not supported. |
| 5 | Tune button<br>**Note**: The Tune button is not supported. |
| 6 | Ring LED indicator |
| 7 | Power LED indicator |
| 8 | Train/Trigger status LED indicator |
| 9 | Pass/Fail LED indicator |
| 10 | Communication LED indicator |
| 11 | Error LED indicator |

# Dimensions

The following sections list dimensions of the vision system.

**Note**:

- Dimensions are in millimeters and are for reference purposes only.
- All specifications are for reference purposes only and can change without notice.

# In-Sight 2800 Mini with 6.2 mm lens

The following image shows the dimensions of In-Sight 2800, equipped with 6.2 mm lens.

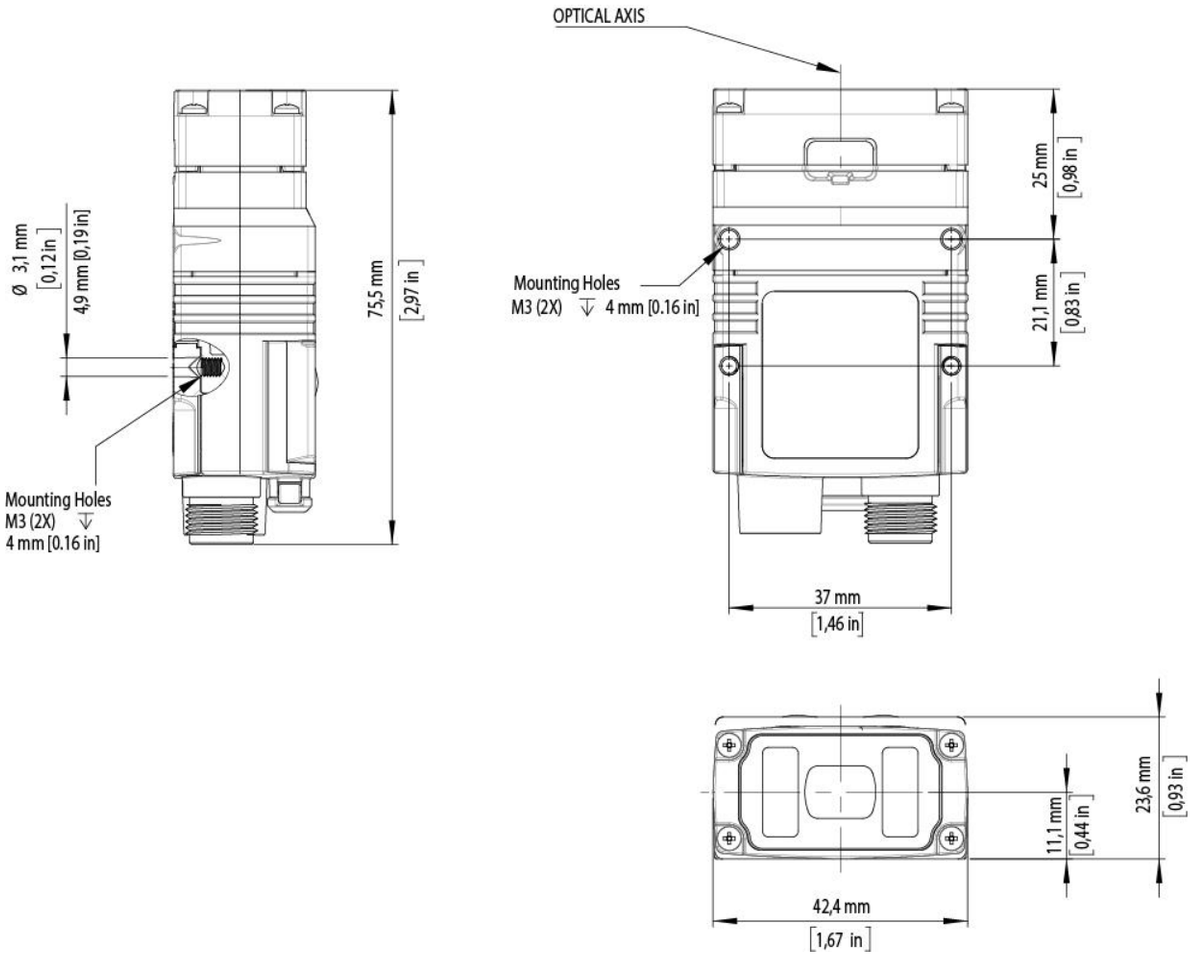

# In-Sight 2800 Mini with 16 mm Lens

The following image shows the dimensions of In-Sight 2800 equipped with 16 mm lens.

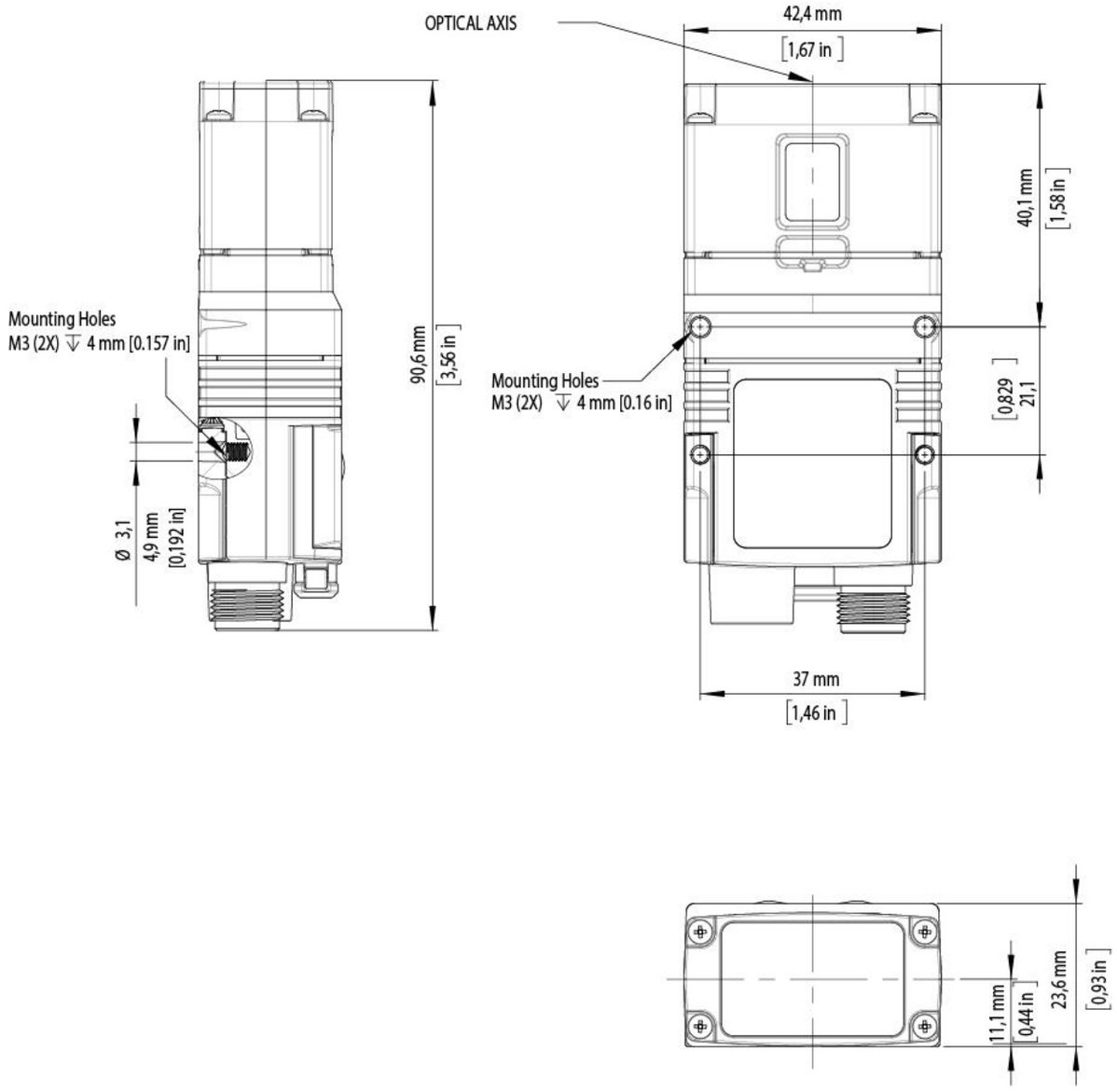

# In-Sight 2800 Mini with 6.2 mm Lens - Right Angle Configuration

The following image shows the dimensions of In-Sight 2800 equipped with L-shaped extension and 6.2 mm lens.

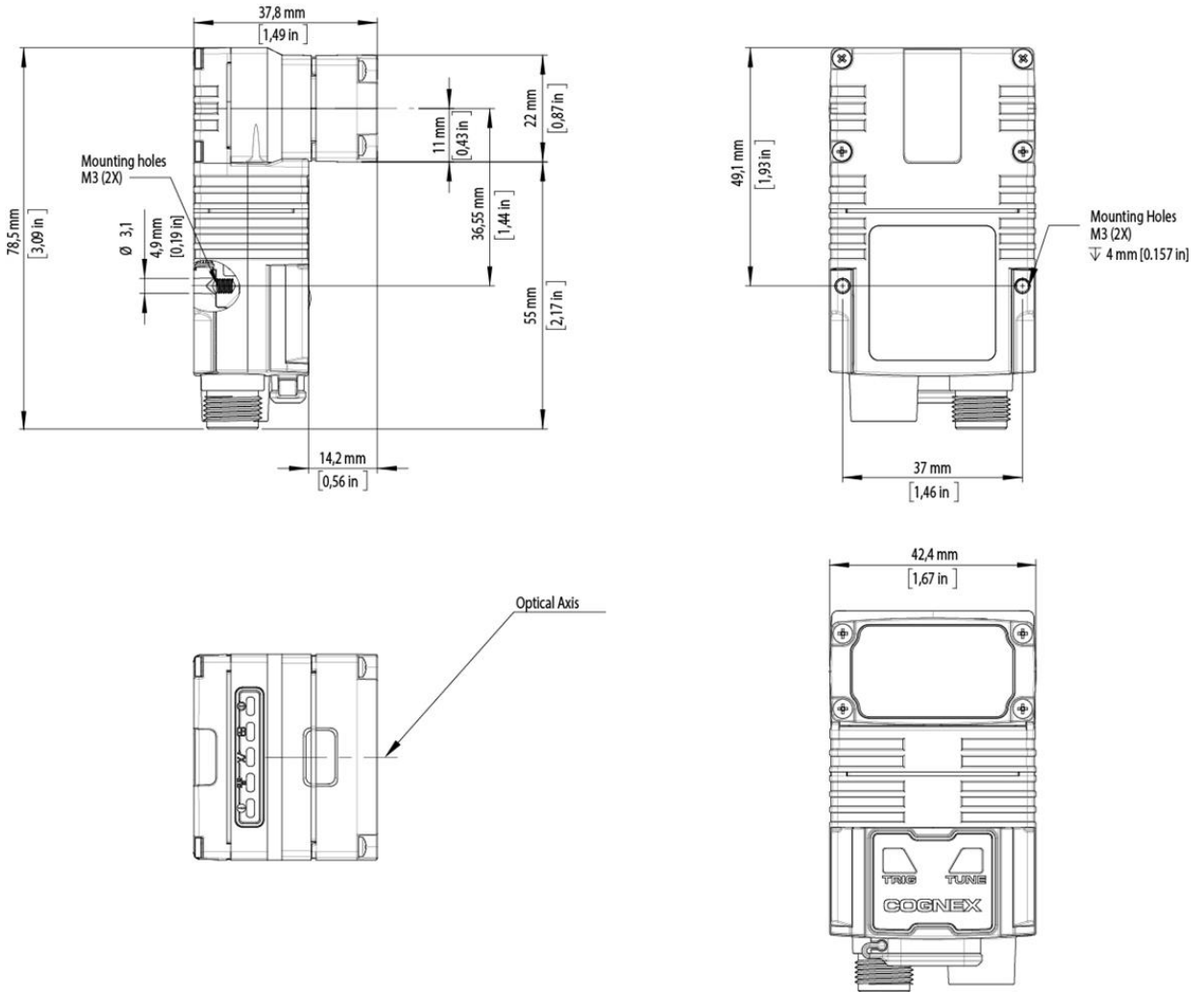


# In-Sight 2800 Mini with 16 mm Lens - Right Angle Configuration

The following image shows the dimensions of In-Sight 2800 equipped with L-shaped extension and 16 mm lens.

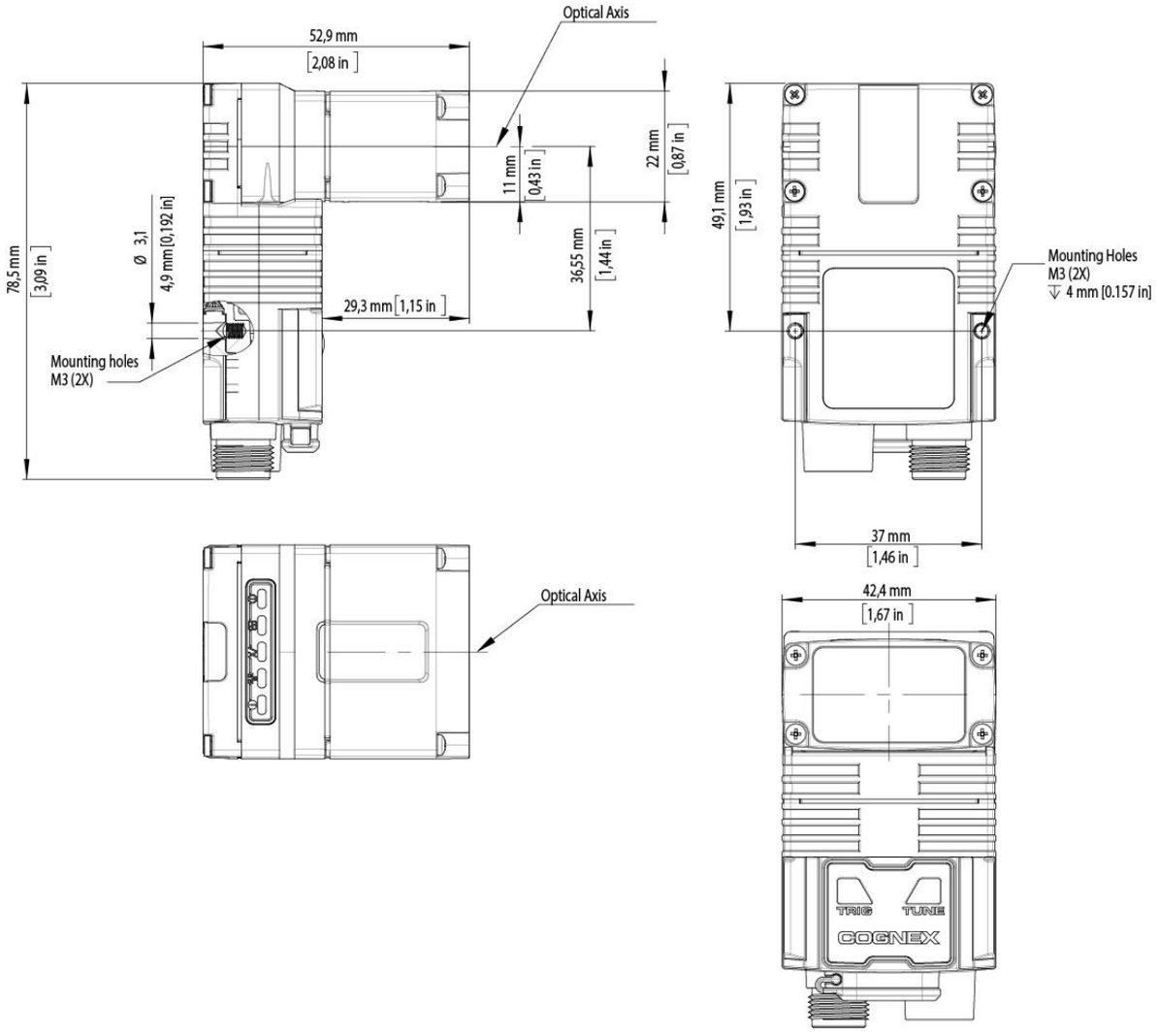


# In-Sight 2800 with Multi Torch

The following image shows the dimensions of In-Sight 2800 equipped with Multi Torch.

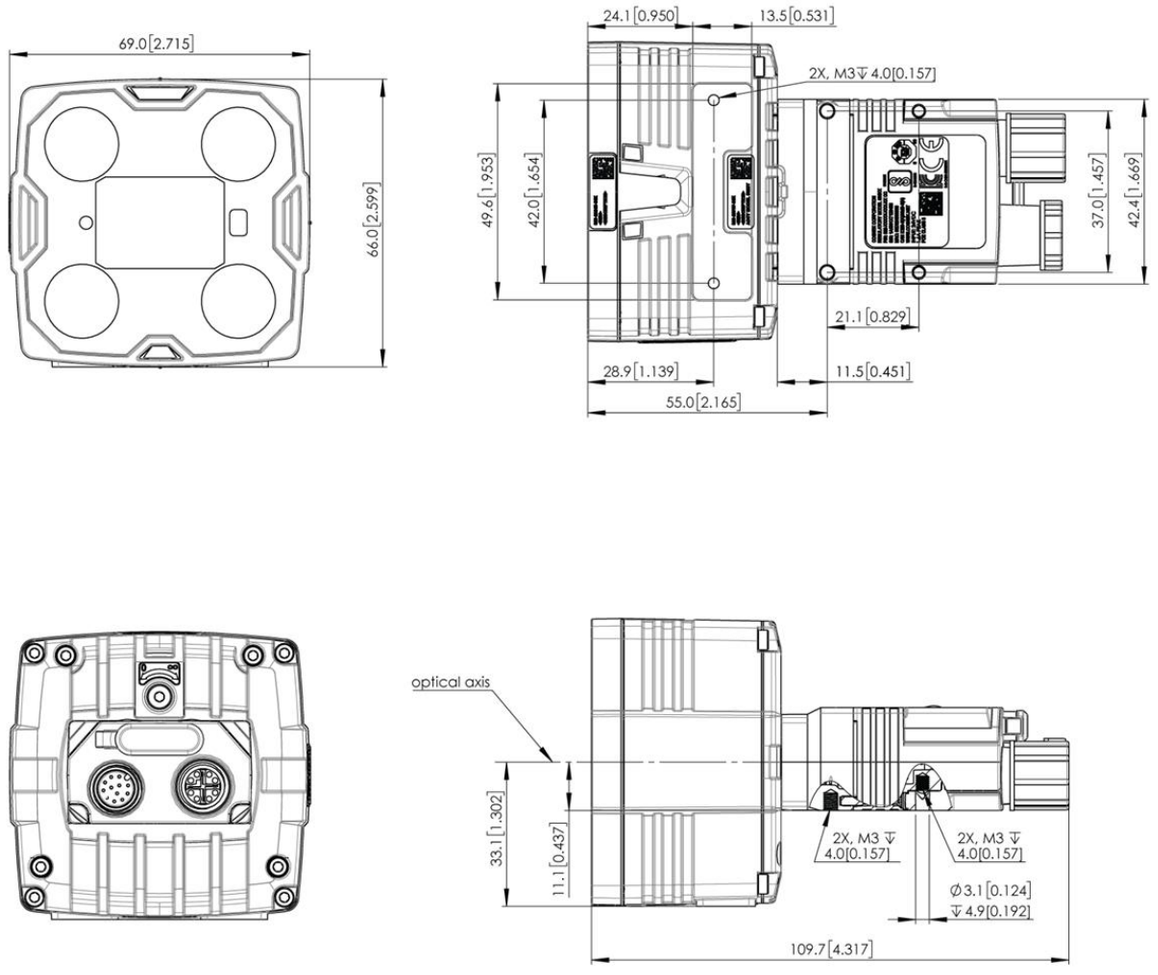


# In-Sight 2800 with Multi Torch - Right Angle Configuration

The following image shows the dimensions of In-Sight 2800 equipped with a Multi Torch and L-shaped extension.

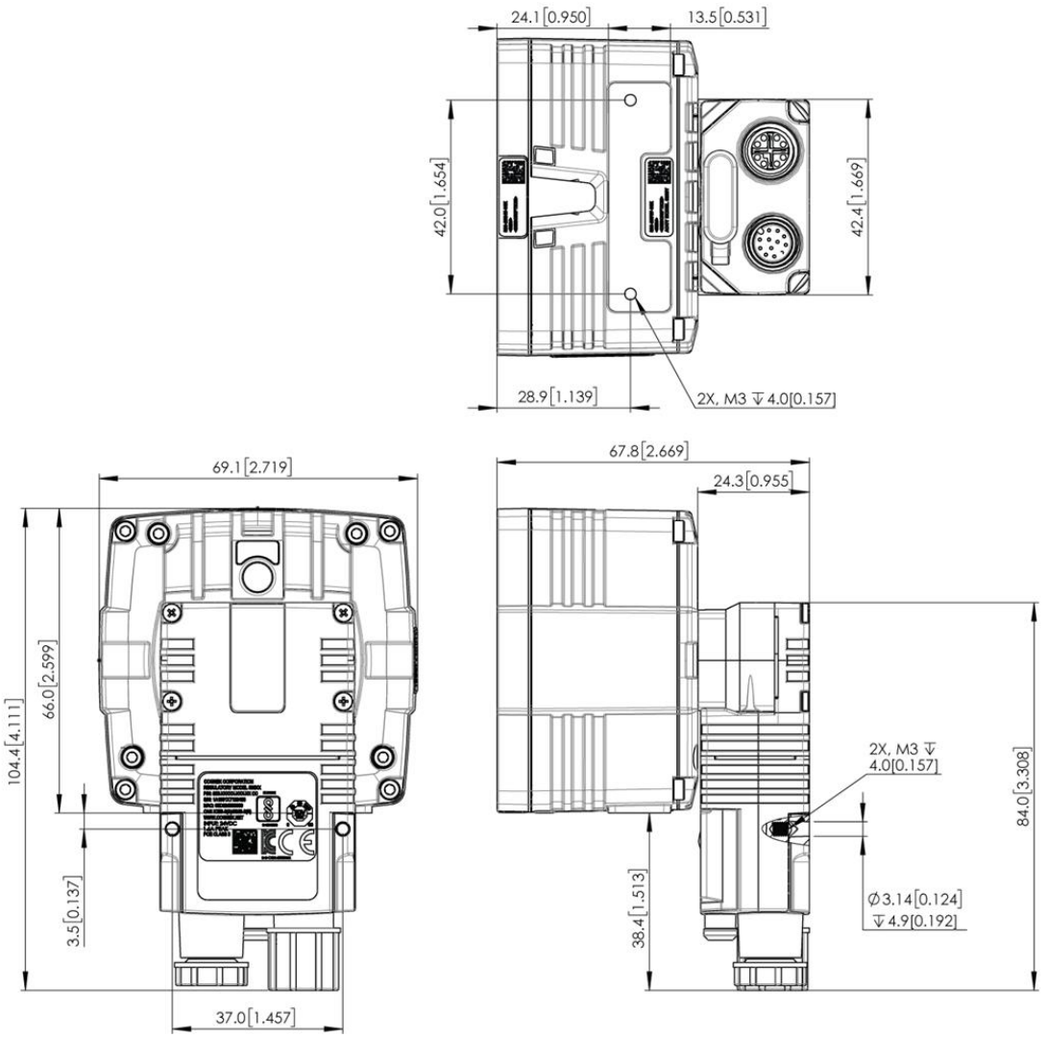


# In-Sight 2800 with Dome Attachment

The following image shows the dimensions of In-Sight 2800 equipped with a dome attachment.

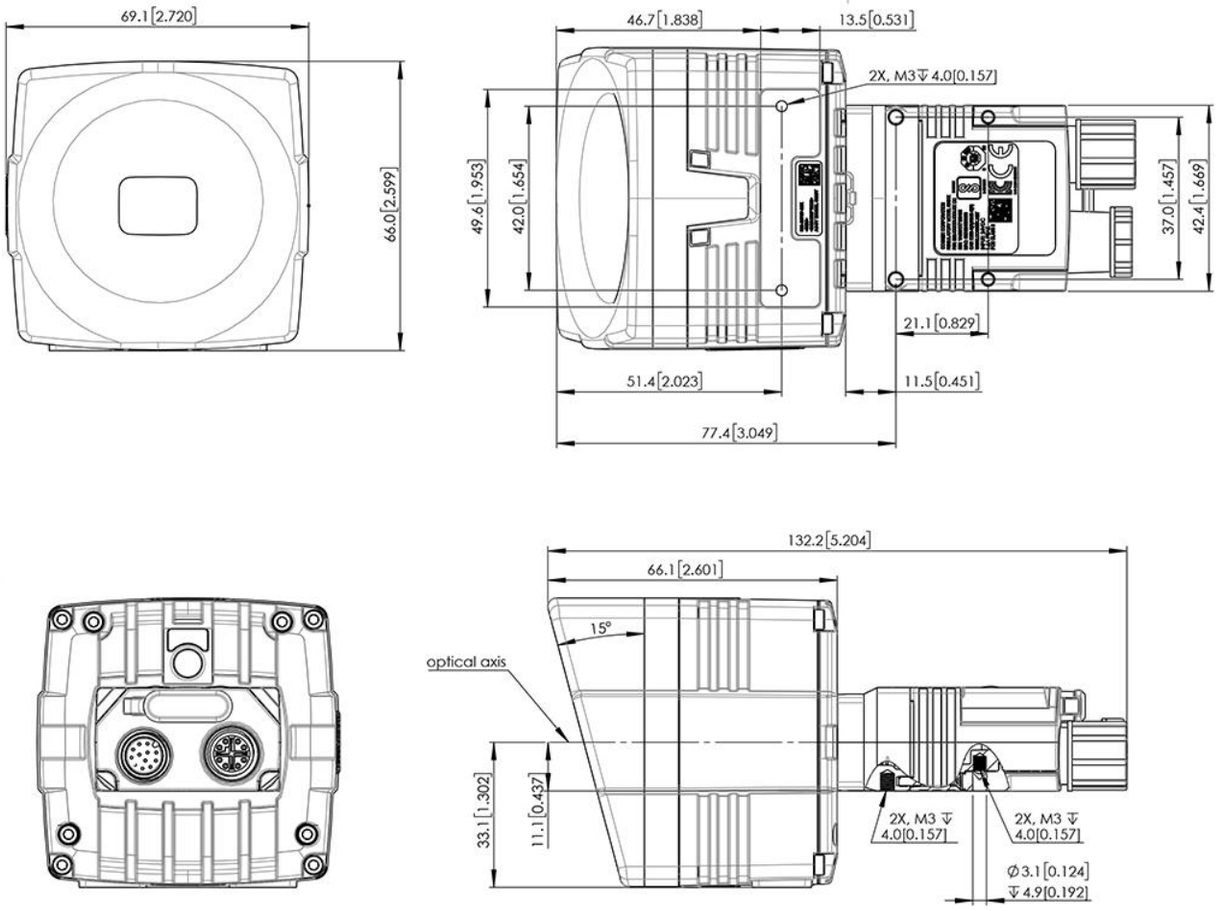


# In-Sight 2800 with Dome Attachment - Right Angle Configuration

The following image shows the dimensions of In-Sight 2800 equipped with L-shaped extension and dome front cover.

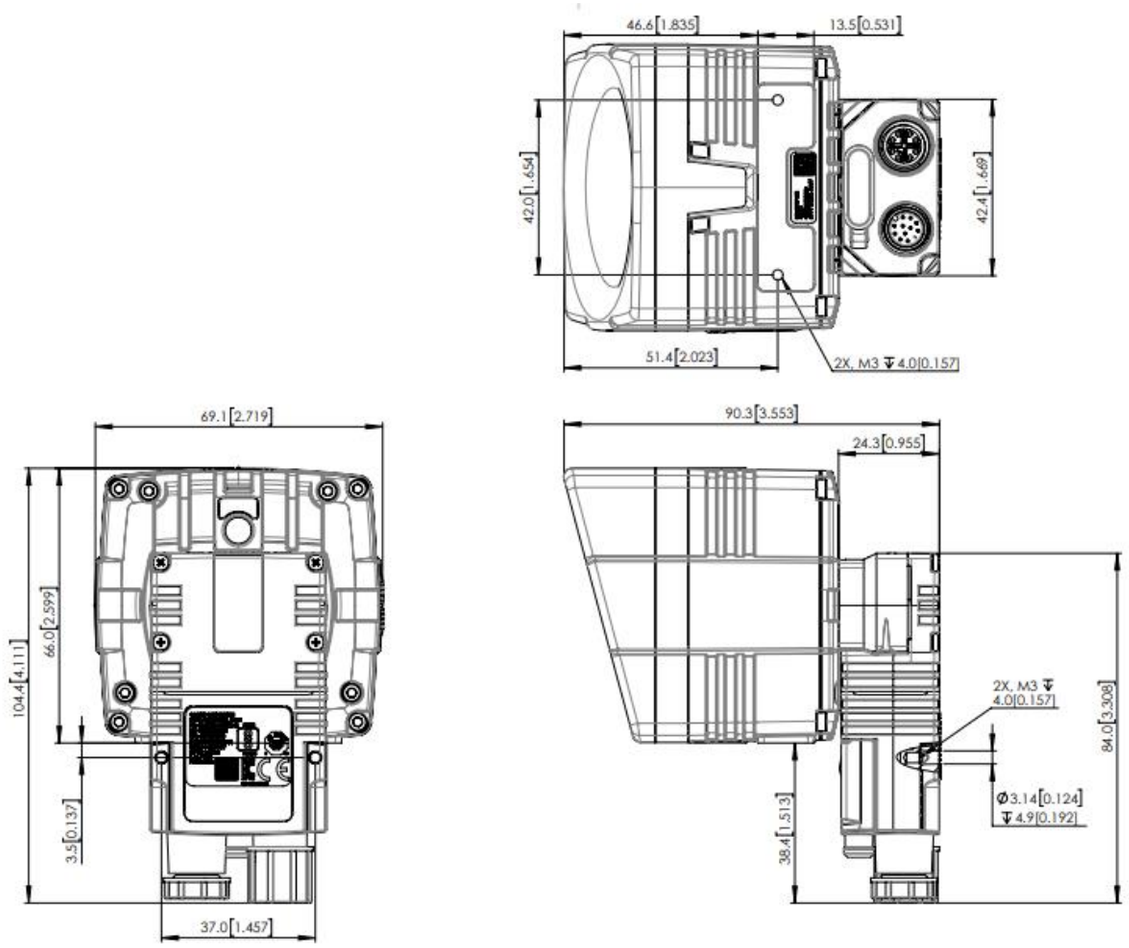


# In-Sight 2800 Series with Wide-Angle High-Powered Illumination Accessory (HIPA)

The following image shows the dimensions of In-Sight 2800 equipped with wide-angle High-Powered Illumination Accessory (HPIA).

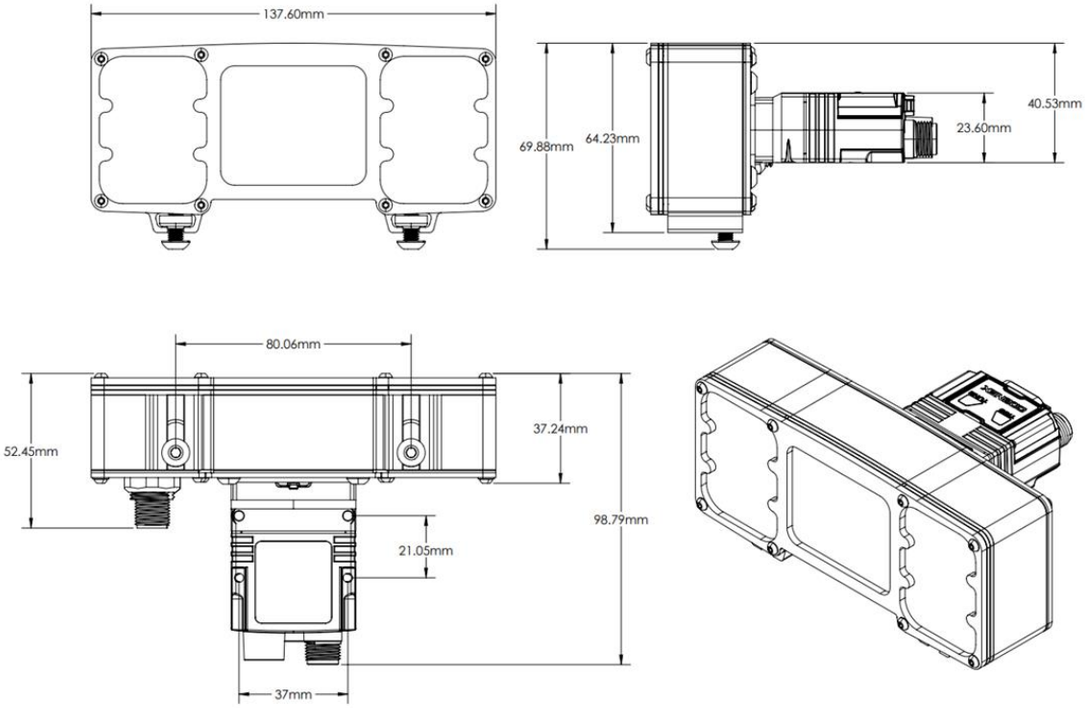


# In-Sight 2800 Series with C-Mount

The following image shows the dimensions of In-Sight 2800 with C-mount.

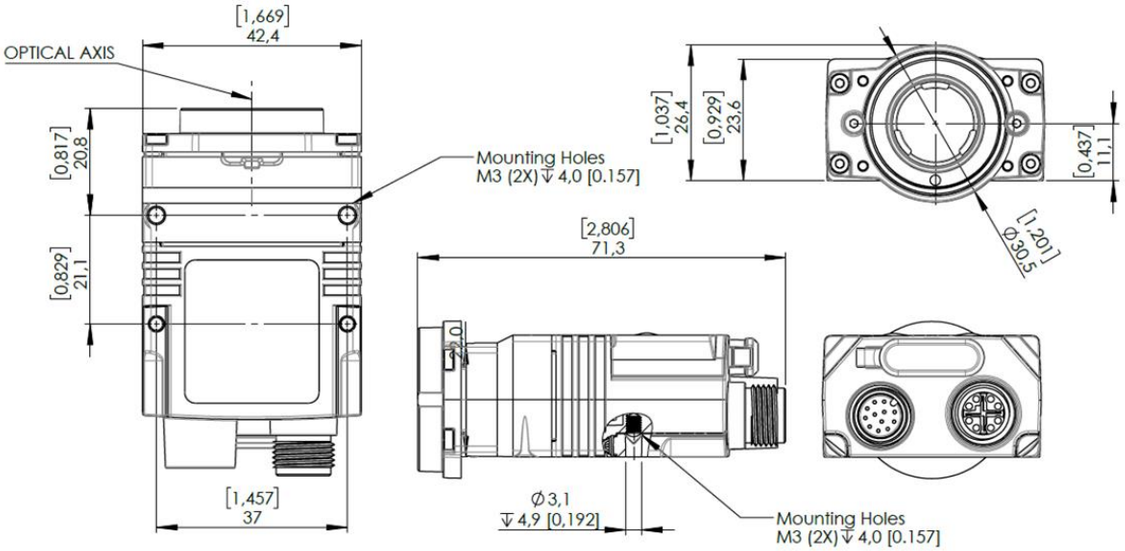

# In-Sight 2800 Series with C-Mount Cover Straight Configuration

The following image shows the dimensions of In-Sight 2800 with C-mount cover.

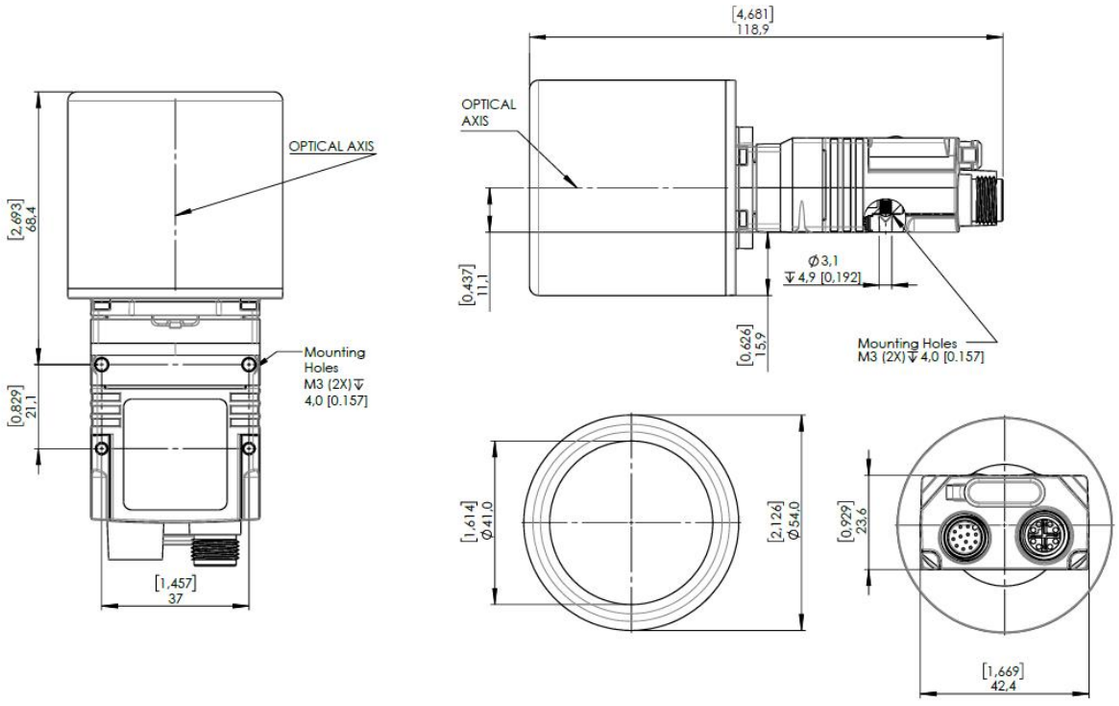


# In-Sight 2800 Series with C-Mount Cover Right Angle Configuration

The following image shows the dimensions of In-Sight 2800 with C-mount cover, right angle configuration.

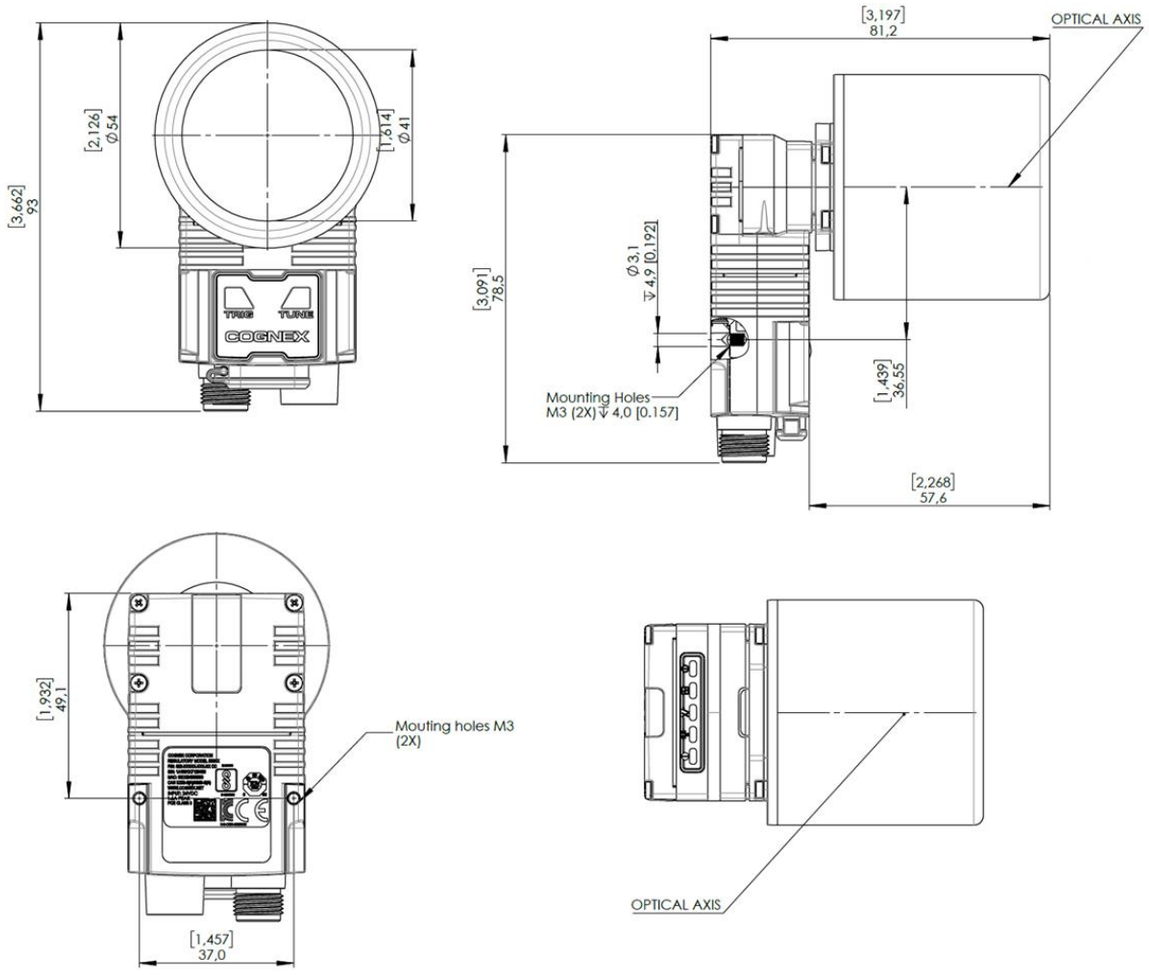
[3,662]
93
[2,126]
Ø54
[1,614]
Ø41
TRIG
TUNE
COGNEX
[3,197]
81,2
OPTICAL AXIS
[3,091]
78,5
Ø3,1
↧4,9 [0,192]
Mounting Holes
M3 (2X) ↧ 4,0 [0.157]
[1,439]
36,55
[2,268]
57,6
[1,932]
49,1
Mouting holes M3
(2X)
[1,457]
37,0
OPTICAL AXIS

# Field of View and Working Distance

This section provides the Field of View (FoV) values for the  IS2800 with Multi Torch, IS2800 Mini, and High-Powered Illumination Accessory (HPIA) configurations. (*On the diagrams, the values at the top are in mm and the values at the bottom of the top values in the brackets are in inch*).

**Note**: The following values shown for FoV are calculated values, and might vary within a tolerance of ±10%.

## In-Sight 2800 with Multi Torch and 8 mm Lens

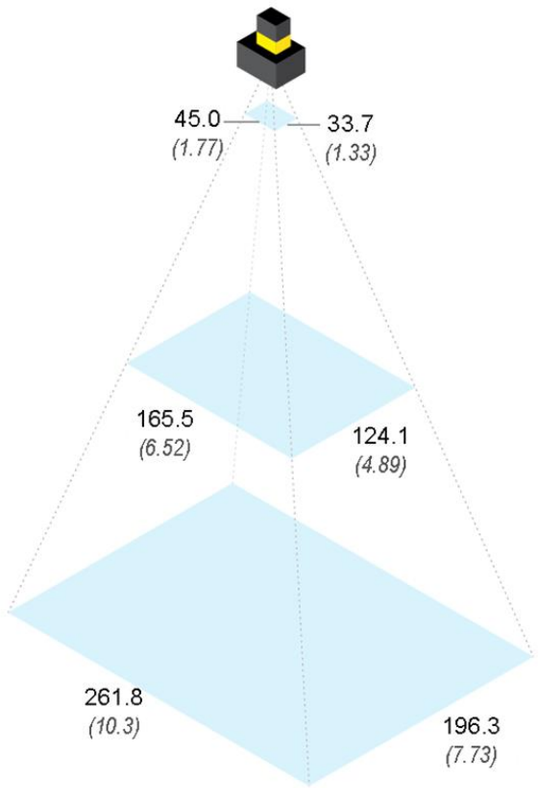

| | Working Distance | Horizontal FOV | Vertical FOV |
|---|---|---|---|
| Minimum | 50 mm (1.97 in) | 45.0 mm (1.77 in) | 33.7 mm (1.33 in) |
| Midpoint | 300 mm (11.8 in) | 165.5 mm (6.52 in) | 124.1 mm (4.89 in) |
| Maximum | 500 mm (19.69 in) | 261.8 mm (10.3 in) | 196.3 mm (7.73 in) |

# In-Sight 2800 with Multi Torch and 12 mm Lens

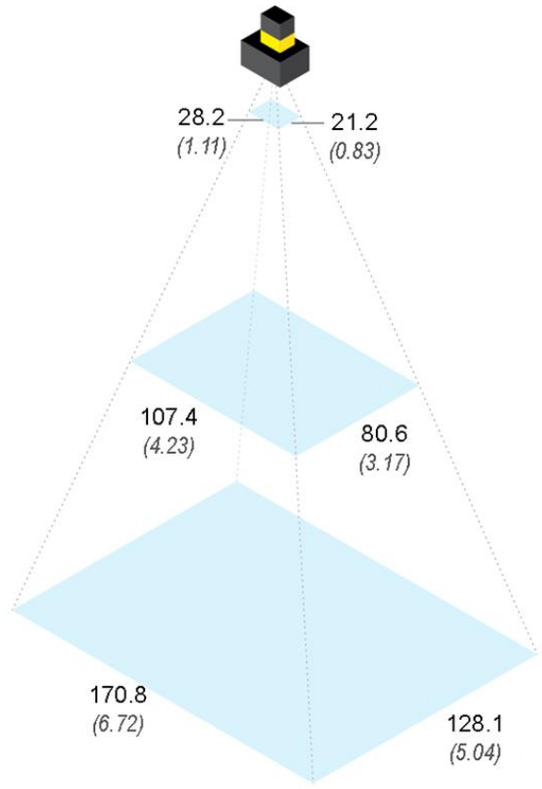


| | Working Distance | Horizontal FOV | Vertical FOV |
|---|---|---|---|
| Minimum | 50 mm (1.97 in) | 28.2 mm (1.11 in) | 21.2 mm (0.83 in) |

| | Working Distance | Horizontal FOV | Vertical FOV |
|---|---|---|---|
| Midpoint | 300 mm (11.8 in) | 107.4 mm (4.23 in) | 80.6 mm (3.17 in) |
| Maximum | 500 mm (19.69 in) | 170.8 mm (6.72 in) | 128.1 mm (5.04 in) |

# In-Sight 2800 with Multi Torch and 16 mm lens

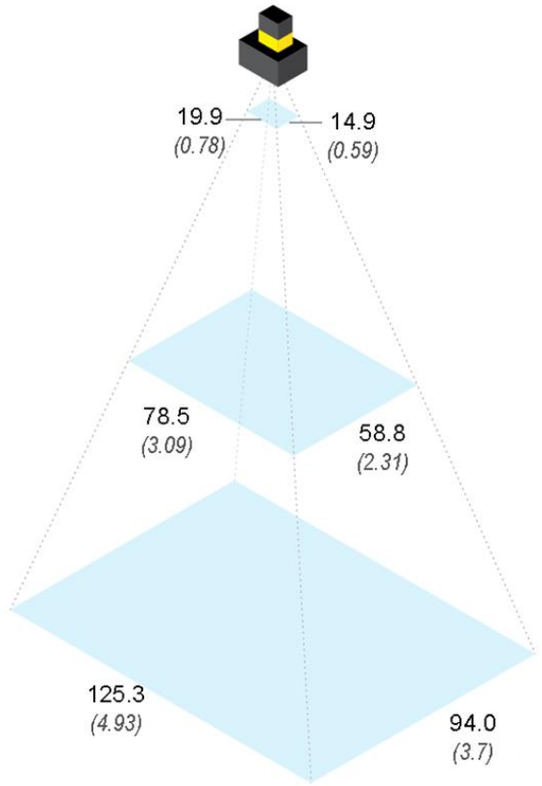


| | Working Distance | Horizontal FOV | Vertical FOV |
|---|---|---|---|
| Minimum | 50 mm (1.97 in) | 19.9 mm (0.78 in) | 14.9 mm (0.59 in) |
| Midpoint | 300 mm (11.8 in) | 78.5 mm (3.09 in) | 58.8 mm (2.31 in) |
| Maximum | 500 mm (19.69 in) | 125.3 mm (4.93 in) | 94.0 mm (3.7 in) |

# In-Sight 2800 Mini with 6.2 mm Lens

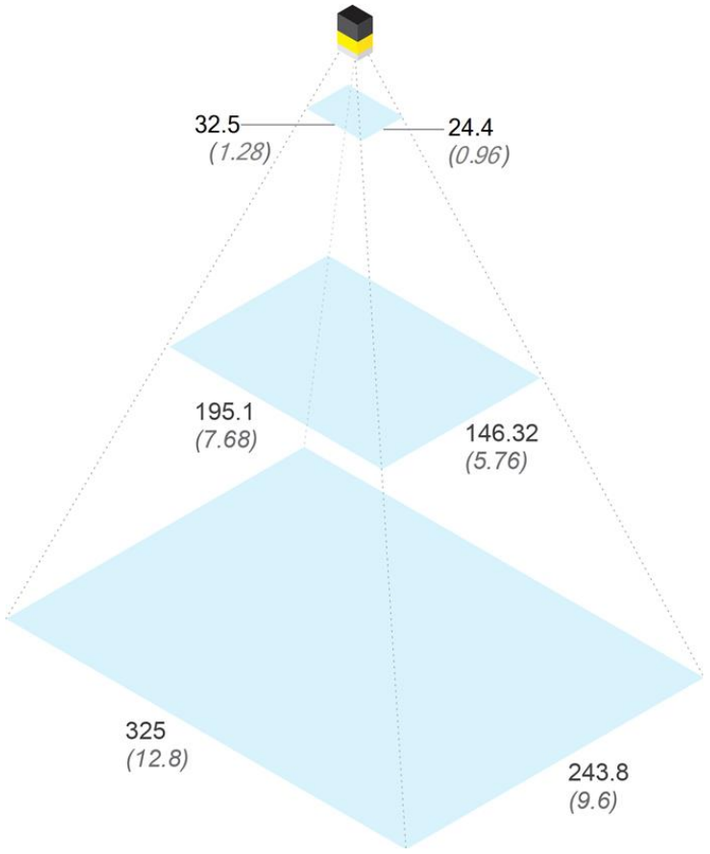


| | Working Distance | Horizontal FOV | Vertical FOV |
|---|---|---|---|
| Minimum | 50 mm (1.97 in) | 32.5 mm (1.28 in) | 24.4 mm (0.96 in) |
| Midpoint | 300 mm (11.8 in) | 195.1 mm (7.68 in) | 146.3 mm (5.76 in) |
| Maximum | 500 mm (19.69 in) | 325 mm (12.8 in) | 243.8 mm (9.60 in) |

# In-Sight 2800 Mini with 16 mm Lens

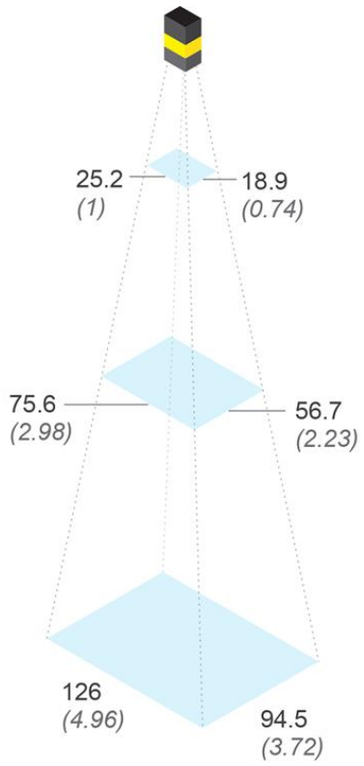


| | Working Distance | Horizontal FOV | Vertical FOV |
|---|---|---|---|
| Minimum | 100 mm (3.94 in) | 25.2 mm (1 in) | 18.9 mm (0.74 in) |
| Midpoint | 300 mm (11.8 in) | 75.6 mm (2.98 in) | 56.7 mm (2.23 in) |
| Maximum | 500 mm (19.69 in) | 126 mm (4.96 in) | 94.5 mm (3.72 in) |

# In-Sight 2800 with High-Powered Illumination Accessory (HPIA) and 6.2 mm Lens

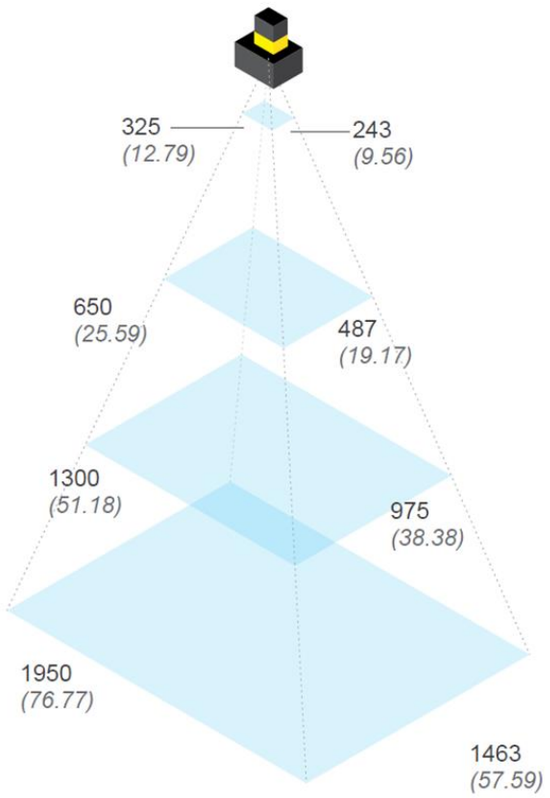


| Working Distance | Horizontal FOV | Vertical FOV |
|---|---|---|
| 500 mm (19.68 in) | 325 mm (12.79 in) | 243 mm (9.56 in) |
| 1000 mm (39.37 in) | 650 mm (25.59 in) | 487 mm (19.17 in) |
| 2000 mm (78.74 in) | 1300 mm (51.18 in) | 975 mm (38.38 in) |
| 3000 mm (118.11 in) | 1950 mm (76.77 in) | 1463 mm (57.59 in) |

For applications with a working distance of 2000 mm or more, Cognex recommends using the clear lens cover that comes with the In-Sight 2800 HPIA model.

# In-Sight 2800 with High-Powered Illumination Accessory (HPIA) and 16 mm Lens

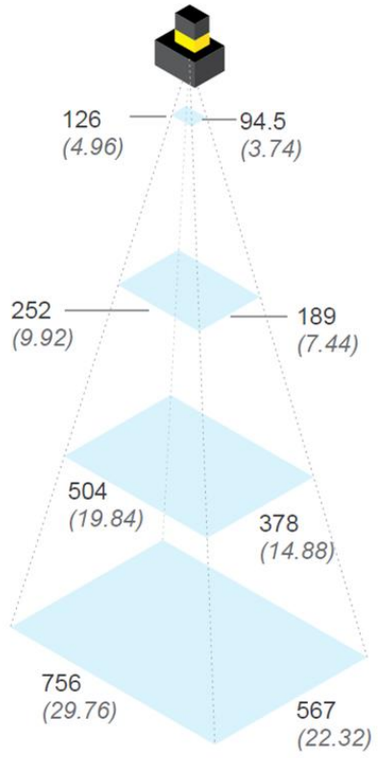


| Working Distance | Horizontal FOV | Vertical FOV |
|---|---|---|
| 500 mm (19.68 in) | 126 mm (4.96 in) | 94.5 mm (3.74 in) |
| 1000 mm (39.37 in) | 252 mm (9.92 in) | 189 mm (7.44 in) |
| 2000 mm (78.74 in) | 504 mm (19.84 in) | 378 mm (14.88 in) |

| Working Distance | Horizontal FOV | Vertical FOV |
|---|---|---|
| 3000 mm (118.11 in) | 756 mm (29.76 in) | 567 mm (22.32 in) |

For applications with a working distance of 2000 mm or more, Cognex recommends using the clear lens cover that comes with the In-Sight 2800 HPIA model.

# In-Sight 2802 with 8 mm High Speed Liquid Lens

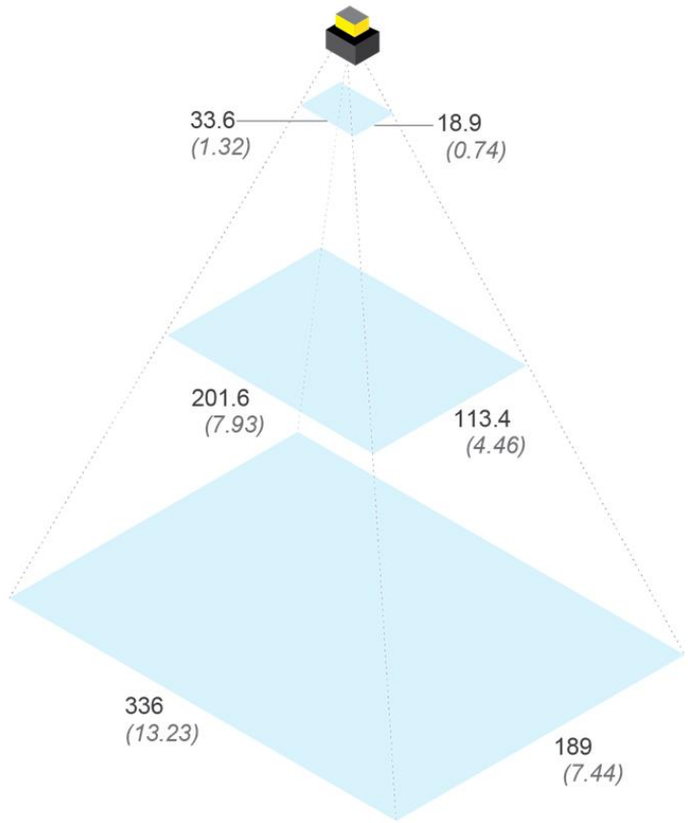


| | Working Distance | Horizontal FOV | Vertical FOV |
|---|---|---|---|
| Minimum | 50 mm (1.97 in) | 33.6 mm (1.32 in) | 18.9 mm (0.74 in) |

| | Working Distance | Horizontal FOV | Vertical FOV |
|---|---|---|---|
| Midpoint | 300 mm (11.8 in) | 201.6 mm (7.93 in) | 113.4 mm (4.46 in) |
| Maximum | 500 mm (19.69 in) | 336 mm (13.23 in) | 189 mm (7.44 in) |

# In-Sight 2802 with Multi Torch and 12 mm Lens

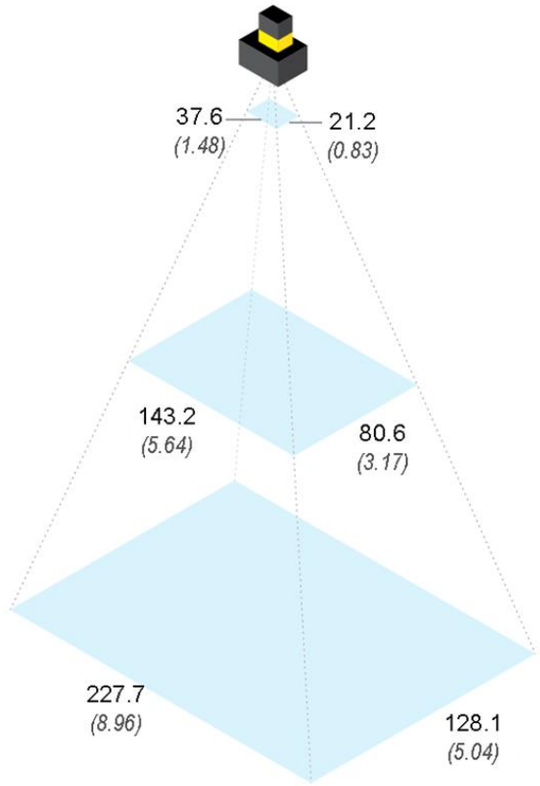


| | Working Distance | Horizontal FOV | Vertical FOV |
|---|---|---|---|
| Minimum | 50 mm (1.97 in) | 37.6 mm (1.48 in) | 21.2 mm (0.83 in) |
| Midpoint | 300 mm (11.8 in) | 143.2 mm (5.64 in) | 80.6 mm (3.17 in) |
| Maximum | 500 mm (19.69 in) | 227.7 mm (8.96 in) | 128.1 mm (5.04 in) |

# In-Sight 2802 with Multi Torch and 16 mm Lens

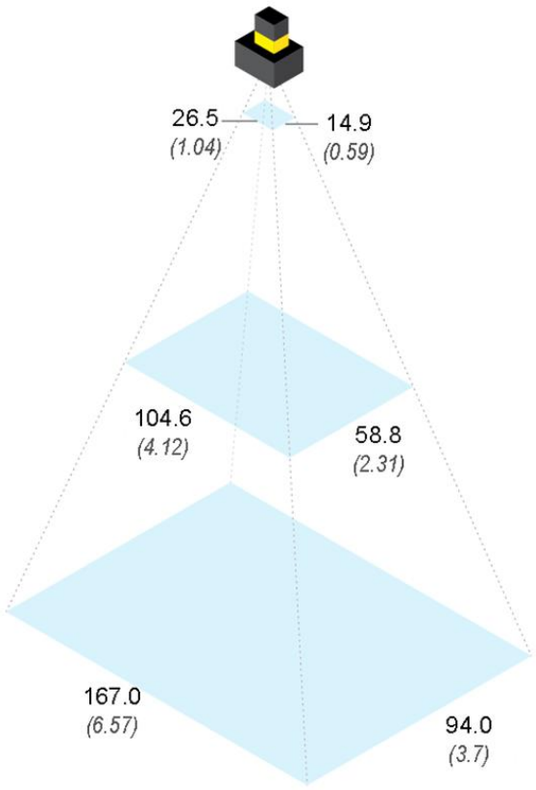


| | Working Distance | Horizontal FOV | Vertical FOV |
|---|---|---|---|
| Minimum | 50 mm (1.97 in) | 26.5 mm (1.04 in) | 14.9 mm (0.59 in) |
| Midpoint | 300 mm (11.8 in) | 104.6 mm (4.12 in) | 58.8 mm (2.31 in) |
| Maximum | 500 mm (19.69 in) | 167.0 mm (6.57 in) | 94.0 mm (3.7 in) |

# Connecting the Vision System

| | |
|---|---|
| | |
| | *Connecting the Ethernet Cable* on page 38 |

# Mounting the Vision System

The vision system provides mounting holes for attachment to a mounting surface.

---

**CAUTION:** The vision system has to be grounded, either by mounting the vision system to a fixture that is electrically grounded or by attaching a wire from the vision system's mounting fixture to frame ground or Earth ground. If a ground wire is used, it has to be attached to one of the four mounting points on the bottom plate of the vision system and not to the mounting points on the front of the vision system.

---

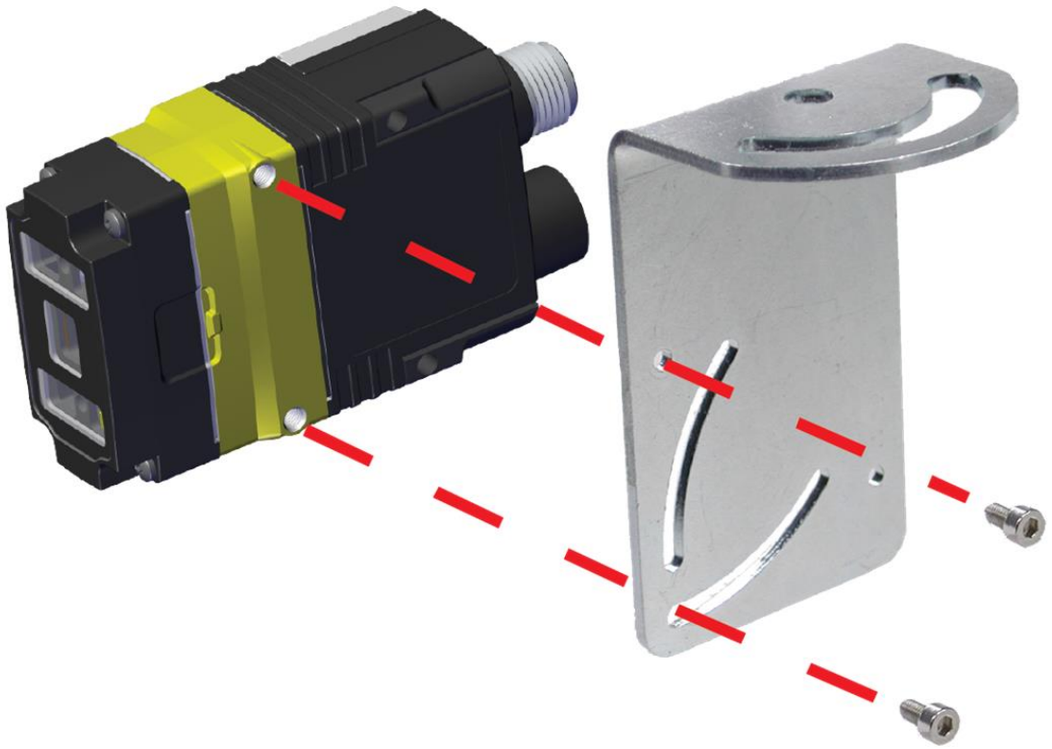

Align the holes on the mounting surface with the mounting holes on the vision system. Insert the M3X3.5 screws into the mounting holes.

**Note**:
Mounting the vision system at a slight angle (15°) reduces reflections and improves performance.

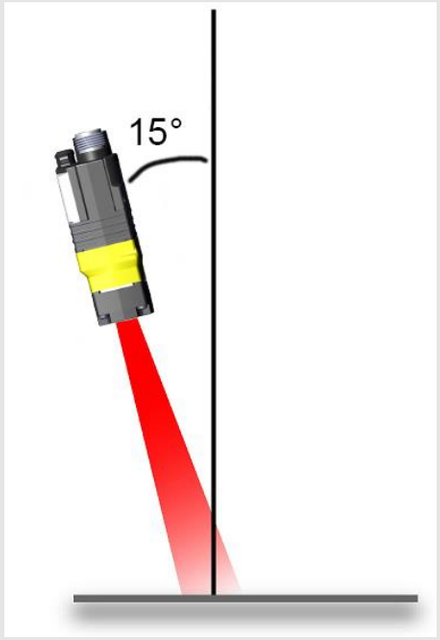

# Connecting the Ethernet Cable

**CAUTION:** The Ethernet cable shield has to be grounded at the far end. If the far end device is not grounded, add a ground wire in compliance with local electrical codes. The cable is typically plugged into a switch or router, which has to have a grounded Ethernet connector. Use a digital voltmeter to validate the grounding.

1. Connect the M12 connector of the Ethernet cable to the vision system ENET connector.
2. Connect the RJ-45 connector of the Ethernet cable to a switch/router or PC, as applicable.

**Note**: Besides powering the vision system through a Breakout Cable, it is possible to power through PoE (Power over Ethernet) connection as well, in which case it is not necessary to use a Breakout Cable.
IS2800 Mini configurations support PoE connection. The Multi Torch configuration does not support PoE connection.

# Connecting the Power and I/O Breakout Cable

**CAUTION:** To reduce emissions, connect the far end of the Breakout cable shield to frame ground.

**Note**:

- Perform wiring or adjustments to I/O devices when the vision system is not receiving power.
- You can clip unused wires short or use a tie made of non-conductive material to tie them back. Keep bare wires separated from the +24 V DC wire.

1. Verify that the 24 V DC power supply is unplugged and not receiving power.
2. Attach the +24 V DC connector of the Power and I/O Breakout cable and Ground wires to the corresponding terminals on the power supply. For more information, see *Specifications* on page 40.
3. Attach the M12 connector of the Power and I/O Breakout Cable to the 24 V DC connector of the vision system.
4. Restore power to the 24 V DC power supply and turn it on if necessary.

# Specifications

The following sections list general specifications for the vision system.

## In-Sight 2800 Vision System

| Specification | In-Sight 2800 |
|---|---|
| Weight | 6.2 mm: 141 g<br>16 mm: 169 g<br>Right angle configuration adds 50 g |
| Power | 24 V DC +/- 10%, USB 5V 500mA |
| 24 V Supply | 24 V DC ± 10%<br>LPS or NEC class 2 |
| | Power consumption without USB device attached:<br>• Average ≤ 5 W using High-Powered Light<br>• Average ≤ 6 W using High Frequency High-Powered Light<br>• Peak ≤ 1.6 A using internal illumination |
| Operating Temperature | 0–40°C (32–104°F) |
| Storage Temperature | -10–60°C (14–140°F) |
| Humidity | <95% non-condensing |

| Specification | In-Sight 2800 |
|---|---|
| Environmental | IP67<br><br>**Note**: IP67 rating applies only if all blind plugs and cables are attached properly, or the provided connector plug is installed. Also, make sure that the IP67-rated cover is installed properly. |
| Shock (Shipping and Storage) | IEC 60068-2-27: 1000 shocks, semi-sinusoidal, 11 g, 10 ms<br>ISTA-1A Standardized Testing - Packaged Products 150 lb or less |
| Vibration (Shipping and Storage) | IEC 60068-2-6: vibration test in each of the three main axis for 2 hours @ 10 Gs (10 to 500 Hz at 100m/s$^2$ / 15 mm)<br>FedEx Vibration Testing for packaged products 150 lbs or less |

# In-Sight 2800 Series Vision System Image Sensor

| Specification | In-Sight 2800 | In-Sight 2801 | In-Sight 2802 |
|---|---|---|---|
| Image Sensor | 1/2.8-inch CMOS monochrome and color | | |
| Image Sensor Properties | Pixel size: 2.8 µm (H) x 2.8 µm (V) | | |
| Image Resolution (pixels) | 720 x 540 (SVGA) | 1440 x 1080 (1.6 mp) | 1920 x 1080 pixels (2 mp) |

| Specification | In-Sight 2800 | In-Sight 2801 | In-Sight 2802 |
|---|---|---|---|
| Electronic Shutter Speed | Minimum exposure: 29 µs<br>Maximum exposure: 10 ms (with internal illumination)<br>Maximum exposure: 200 ms (with external illumination) | | |
| Image Acquisition at Full Resolution | Up to 45 Hz | | |
| Lens Type | Multi Torch:<br>• Manual focus: 16 mm, 12 mm, 8 mm<br>• Autofocus: 16 mm (High Speed Liquid Lens), 12 mm (High Speed Liquid Lens), 8 mm (High Speed Liquid Lens)<br>High-Powered Illumination Accessory (HPIA):<br>• Autofocus: 6.2 mm (High Speed Liquid Lens), 16 mm (High Speed Liquid Lens)<br>IS2800 Mini:<br>• Manual: 6.2 mm, 16 mm<br>• Autofocus: 6.2 mm, 16 mm (High Speed Liquid Lens) | | Multi Torch:<br>• Manual focus: 16 mm, 12 mm<br>• Autofocus: 16 mm (High Speed Liquid Lens), 12 mm (High Speed Liquid Lens)<br>IS2800 Mini:<br>• Autofocus: 6.2 mm (High Speed Liquid Lens) |

# LED and Laser Wavelengths

The following table shows LED types and the related peak wavelengths.

| Model | LED | Wavelength |
|---|---|---|
| In-Sight 2800 Mini with 6.2mm Lens Illumination/with 16mm Lens and High Powered Illumination | White | Chromaticity coordinates acc. to CIE 1931 • Cx 0.34 (typ.) • Cy 0.33 (typ.) |
| | Blue | 465 nm |
| | Red | 617 nm |
| | IR | 850 nm |
| In-Sight 2800 with Multi Torch Illumination | Multicolor | • 453 nm (blue)<br>• 525 nm (green)<br>• 625 nm (red)<br>• Color temperature: 6740 Kelvin (white) Chromaticity coordinates acc. to CIE 1931<br>  • Cx 0.31 (typ.)<br>  • Cy 0.32 (typ.) |
| | IR | 850 nm |

# Regulations and Conformity

**Note**: For the most current CE and UKCA declaration and regulatory conformity information, see the Cognex support site: cognex.com/support.

In-Sight 2800 vision systems have Regulatory Model numbers 50208, 50210, 50215, 50216, and meet or exceed the requirements of all applicable standards organizations for safe operation. However, as with any electrical equipment, the best way to ensure safe operation is to operate them according to the agency guidelines that follow. Please read these guidelines carefully before using your device.

| Safety and Regulatory | |
|---|---|
| Manufacturer | Cognex Corporation<br>One Vision Drive<br>Natick, MA 01760 USA |
| CE | In-Sight 2800 1.6 MP: Regulatory Model 50208<br>In-Sight 2800 1.6 MP L-shaped: Regulatory Model 50210<br>In-Sight 2800 2 MP: Regulatory Model 50215<br>In-Sight 2800 2 MP L-shaped: Regulatory Model 50216<br>This is a class A product. In a domestic environment this product may cause radio interference in which case the user may be required to take immediate measures.<br>This equipment complies with the essential requirements of the EU Directive 2014/30/EU. Declarations are available from your local representative. |
| EU RoHS | Compliant to the most recent applicable directive. |

| Safety and Regulatory | |
|---|---|
| FCC | FCC Part 15, Class A<br>This equipment has been tested and found to comply with the limits for a Class A digital device, pursuant to part 15 of the FCC Rules. These limits are designed to provide reasonable protection against harmful interference when the equipment is operated in a commercial environment. This equipment generates, uses, and can radiate radio frequency energy and, if not installed and used in accordance with the instruction manual, may cause harmful interference to radio communications. Operation of this equipment in a residential area is likely to cause harmful interference in which case the user will be required to correct the interference at his own expense. |
| Korea<br> | This device is certified for office use only and if used at home, there can be frequency interference problems.<br>A급 기기(업무용 방송통신기자재): 이 기기는 업무용(A급) 전자파적합기기로서 판매자 또는 사용자는 이 점을 주의하시기 바라며, 가정외의 지역에서 사용하는 것을 목적으로 합니다.<br>In-Sight 2800 1.6 MP: R-R-CGX-50208<br>In-Sight 2800 1.6 MP L-shaped: R-R-CGX-50210<br>In-Sight 2800 2 MP: R-R-CGX-50215<br>In-Sight 2800 2 MP L-shaped: R-R-CGX-50216 |
| TÜV | In-Sight 2800 1.6 MP: Regulatory Model 50208<br>In-Sight 2800 1.6 MP L-shaped: Regulatory Model 50210<br>In-Sight 2800 2 MP: Regulatory Model 50215<br>In-Sight 2800 2 MP L-shaped: Regulatory Model 50216 |
| | NRTL: TÜV SÜD SCC/NRTL OSHA Scheme for UL/CAN 61010-1. |
| | CB report available upon request. TÜV SÜD, IEC/EN 61010-1. |
| UK CA | In-Sight 2800 1.6 MP: Regulatory Model 50208<br>In-Sight 2800 1.6 MP L-shaped: Regulatory Model 50210<br>In-Sight 2800 2 MP: Regulatory Model 50215<br>In-Sight 2800 2 MP L-shaped: Regulatory Model 50216<br>This is a class A product. In a domestic environment this product may cause radio interference in which case the user may be required to take immediate measures. This equipment complies with the essential requirements of the Electromagnetic Compatibility Regulations 2016. Declarations are available from your local representative. |

# 中国大陆RoHS (Information for China RoHS Compliance)

根据中国大陆《电子信息产品污染控制管理办法》(也称为中国大陆RoHS)，以下部份列出了本产品中可能包含的有毒有害物质或元素的名称和含量。




| | Hazardous Substances 有害物质 | | | | | |
|---|---|---|---|---|---|---|
| Part Name 部件名称 | Lead (Pb) 铅 | Mercury (Hg) 汞 | Cadmium (Cd) 镉 | Hexavalent Chromium (Cr (VI)) 六价铬 | Polybrominated biphenyls (PBB) 多溴联苯 | Polybrominated diphenyl ethers (PBDE) 多溴二苯醚 |
| Regulatory Model 50208 Regulatory Model 50210 Regulatory Model 50215 Regulatory Model 50216 | X | O | O | O | O | O |

This table is prepared in accordance with the provisions of SJ/T 11364.
这个标签是根据SJ / T 11364 的规定准备的。

O: Indicates that said hazardous substance contained in all of the homogeneous materials for this part is below the limit requirement of GB / T26572 - 2011.
表示本部件所有均质材料中含有的有害物质低于GB / T26572 - 2011 的限量要求。

X: Indicates that said hazardous substance contained in at least one of the homogeneous materials used for this part is above the limit requirement of GB / T26572 - 2011.
表示用于本部件的至少一种均质材料中所含的危害物质超过GB / T26572 - 2011 的限制要求。

# For European Community Users

Cognex complies with Directive 2012/19/EU OF THE EUROPEAN PARLIAMENT AND OF THE COUNCIL of 4 July 2012 on waste electrical and electronic equipment (WEEE).

This product has required the extraction and use of natural resources for its production. It may contain hazardous substances that could impact health and the environment, if not properly disposed.

In order to avoid the dissemination of those substances in our environment and to diminish the pressure on the natural resources, we encourage you to use the appropriate take-back systems for product disposal. Those systems will reuse or recycle most of the materials of the product you are disposing in a sound way.

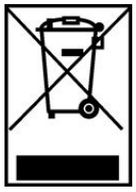
The crossed out wheeled bin symbol informs you that the product should not be disposed of along with municipal waste and invites you to use the appropriate separate take-back systems for product disposal.

If you need more information on the collection, reuse, and recycling systems, please contact your local or regional waste administration.

You may also contact your supplier for more information on the environmental performance of this product.

Copyright © 2026
Cognex Corporation. All Rights Reserved.