COGNEX

Advanced machine vision made easy

In-Sight® 3900 Series

Reference Manual

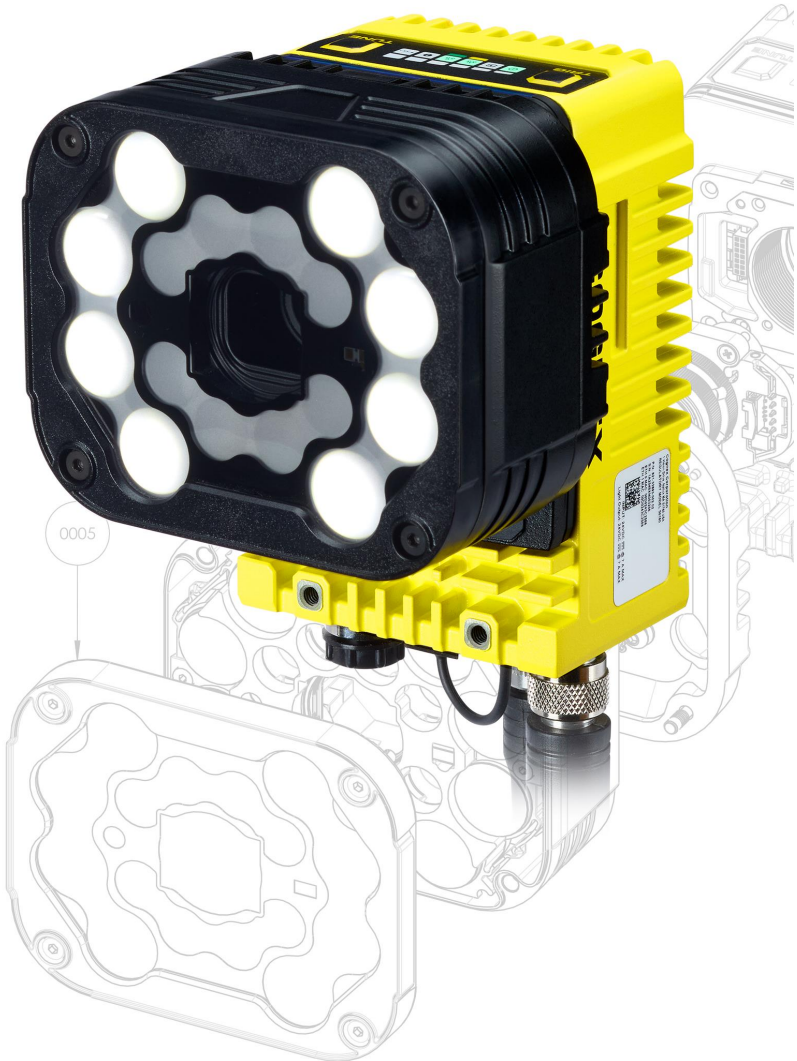

2026 September 24

Legal Notices

The software described in this documentation is provided "as is" and "as available," without warranty of any kind, express or implied, including but not limited to the warranties of merchantability, fitness for a particular purpose, and non-infringement. In no event shall Cognex Corporation and its global affiliates (collectively, “Cognex”) be liable for any claims, damages, or other liability arising from, out of, or in connection with the software or your use of the software.

Your use of this software is governed by the full terms and conditions of the Cognex Software License Agreement. For complete licensing details and legal terms, please visit https://www.cognex.com/terms-and-conditions.

The information in this document is subject to change without notice and should not be construed as a commitment by Cognex. Cognex is not responsible for any errors that may be present in either this document or the associated software.

Companies, names, and data used in examples herein are fictitious unless otherwise noted. No part of this document may be reproduced or transmitted in any form or by any means, electronic or mechanical, for any purpose, nor transferred to any other media or language without the written permission of Cognex Corporation.

Portions of the hardware and software provided by Cognex may be covered by one or more U.S. and foreign patents, as well as pending U.S. and foreign patents listed on the Cognex web site at: cognex.com/patents.

In the event of any inconsistency between the English language version of this documentation and any other language version, the English language version shall take precedence.

Copyright © 2026. Cognex Corporation. All Rights Reserved.

The following are registered U.S. trademarks of Cognex Corporation:

2DMAX, 3D LIGHTBURST TECHNOLOGY, ADVANTAGE, ALIGNPLUS, ASSEMBLYPLUS, COGNEX, COGNEX VISION FOR INDUSTRY, CVL, DATAMAN, DVT, EASYBUILDER, EDGE INTELLIGENCE, HOTBARS, IDMAX, IN-SIGHT, LIGHTBURST, MX, OMNIVIEW, PATFIND, PATFLEX, PATINSPECT, PATMAX, PATMAX REDLINE, PATQUICK, POWERGRID, QUICKSORT, ULTRALIGHT, VISION SOLUTIONS, VISIONPRO, VISIONVIEW

The following are trademarks of the Cognex Corporation:

1DMAX, 3D SYMBOLIC LIGHT, 3D-LOCATE, 3DMAX, ONEVISION, PINPOINT, RANGEMAX, SLX, VIDI, OCRMAX, INSPECTEDGE, VISION SOLUTIONS

Portions copyright © Microsoft Corporation. All rights reserved.

Portions copyright © MadCap Software, Inc. All rights reserved.

Other product and company trademarks identified herein are the trademarks of their respective owners.

Precautions

To reduce the risk of injury or equipment damage, observe the following precautions when you install the Cognex product:

- The vision system requires a UL or NTRL-listed power supply that meets the following rating requirements:
  - 24 VDC (+/- 10%) output connection using a UL or NTRL-listed LPS or NEC Class 2 power supply
  - Any other voltage creates a risk of fire or shock and can damage the components. Applicable national and local wiring standards and rules must be followed.
- This product is intended for industrial use in automated manufacturing or similar applications.
- The safety of any system incorporating this product is the responsibility of the assembler of the system.
- Do not install Cognex products where they are exposed to environmental hazards such as excessive heat, dust, moisture, humidity, impact, vibration, corrosive substances, flammable substances, or static electricity.
- Route cables and wires away from high-current wiring or high-voltage power sources to reduce the risk of damage or malfunction from the following causes: over-voltage, line noise, electrostatic discharge (ESD), power surges, or other irregularities in the power supply.
- Do not expose the image sensor to laser light. Image sensors can be damaged by direct, or reflected, laser light. If your application requires laser light that might strike the image sensor, use a lens filter at the corresponding laser wavelength. For suggestions, contact your local integrator or application engineer.
- This product does not contain user-serviceable parts. Do not make electrical or mechanical modifications to product components. Unauthorized modifications can void your warranty.
- Changes or modifications not expressly approved by the party responsible for regulatory compliance could void the user's authority to operate the equipment.
- Include service loops with cable connections.
- Ensure that the cable bend radius begins at least six inches from the connector. Cable shielding can be degraded or cables can be damaged or wear out faster if a service loop or bend radius is tighter than 10X the cable diameter.
- This device should be used in accordance with the instructions in this manual.
- All specifications are for reference purposes only and can change without notice.

Symbols

The following symbols indicate safety precautions and supplemental information:

WARNING: This symbol indicates a hazard that could cause death, serious personal injury or electrical shock.

CAUTION: This symbol indicates a hazard that could result in property damage.

Note: This symbol indicates additional information about a subject.

Tip: This symbol indicates suggestions and shortcuts that might not otherwise be apparent.

Table of Contents

Legal Notices 2
Precautions 3
Symbols 4
Table of Contents 5
Getting Started 7
About the In-Sight 3900 Series 7
Vision System Layout 7
Connector Layout 8
LED and Button Panel Layout 8
Indicator LEDs 10
In-Sight 3900 Series Accessories 12
Lenses 12
Lens Covers 17
Integrated Lights 18
Integrated Light Accessories 20
Supported Lights 20
Mounting Brackets 21
Cables 22
Setting Up Your In-Sight Vision System 24
Mounting the Vision System 24
Mounting Bracket (BKT-INS-01) 24
Converter Mounting Bracket (ISB-7000-7K) 25
Converter Mounting Bracket (ISB-7000-5K) 25
Installing Lenses and Lighting 26
Installing the Bandpass Filter 26
Installing Lenses with Multi Torch 28
Attaching Lens Cover 31
Installing High Speed Liquid Lens with Torch-HR 32
Remove the Illumination Accessory PCB 34
Connecting Cables 36
Connecting the EtherCAT Cable 36
Connecting the Ethernet Cable 37
Connecting the Power and I/O Breakout Cable 37
Connecting Right-Angled Cables 38
Using Your In-Sight Vision System 39
Installing In-Sight Vision Suite 39
Trigger Types 39
External Triggers 39
Industrial Protocols 40
Specifications 41
In-Sight 3900 Series Vision System 41
In-Sight 3900 Series Vision System Image Sensor 42
Spectral Response Diagrams 44

In-Sight 3901 Spectral Response Diagrams 44
In-Sight 3905 Spectral Response Diagrams 45
In-Sight 3916 and 3925 Spectral Response Diagrams 46
LED Wavelengths 47
Multi-Torch RGBW-IR Integrated Lights 48
Torch-HR Integrated Lights 48
Dimensions 49
In-Sight 3900 - Smart Camera Only 49
In-Sight 3900 with 15 mm Lens Cover 50
In-Sight 3900 with 45 mm Lens Cover 50
In-Sight 3900 with 60 mm Lens Cover 51
In-Sight 3900 with 75 mm Lens Cover 51
In-Sight 3900 Multi-Torch with Standard Front Cover 52
In-Sight 3900 Multi-Torch with Dome Attachment 52
Field of View and Working Distance 53
In-Sight 3901 FoV Values (1.6 MP) 53
In-Sight 3905 FoV Values with 3 MP Mode 55
In-Sight 3905 FoV Values (5 MP) 57
In-Sight 3916 FoV Values with 8 MP Mode 59
In-Sight 3916 FoV Values with 12 MP Mode 62
In-Sight 3916 FoV Values (16 MP) 65
In-Sight 3925 FoV Values (25 MP) 68
High-Speed Liquid Lens Focus Distances 71
Acquisition Trigger Input 72
High-Speed Outputs 73
Connecting to NPN Lines 73
Connecting to PNP Lines 73
Cable Specifications 75
Breakout Cable 75
Ethernet Cable 76
EtherCAT Adapter Cable 76
External Light Connector 78
In-Sight 3900 - Cable Bend Radius 79
Cleaning and Maintenance 80
Clean the Housing 80
Clean the Vision System Image Sensor Window 80
Clean the Vision System Lens Cover 80
Regulations and Conformity 81
For European Community Users 82
中国 RoHS 合规声明 / China RoHS Compliance Declaration 82

Getting Started

This section provides general information about the In-Sight 3900 series vision system and the accessories and systems.

About the In-Sight 3900 Series

The In-Sight 3900 series is a vision system that provides high speed and accuracy using AI. It supports a wide range of manufacturing applications, including defect detection, assembly verification, and character reading.

The vision system is embedded with a full set of robust rule-based tools and edge learning technology, with support for deploying Advanced AI tools using OneVision.

Vision System Layout

The image and table below shows the main elements of the vision system.



View	Number	Description
Front	1	C-mount flange
	2	Integrated Illumination connector
	3	Imager
	4	Lens connector
Bottom	5	Connectors
Top	6	LED and button panel
2/3	7	Ring LED indicator

Connector Layout

The image and table below shows the connectors on the bottom of the vision system.

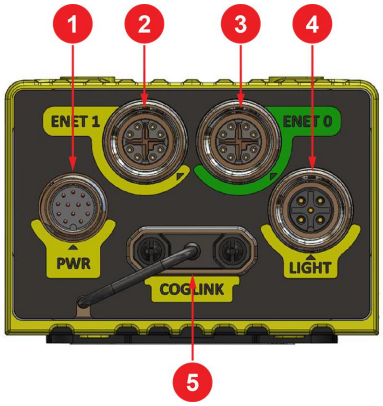

Number	Description
1	Power I/O Breakout cable connector
2	Ethernet connector 1 (data communication and configuration)
3	Ethernet connector 0 (Industrial Ethernet, data communication, and configuration)
4	Light connector
5	Coglink/USB-C connector

LED and Button Panel Layout

The image and table below shows the indicator LEDs and the buttons on the top of the vision system.

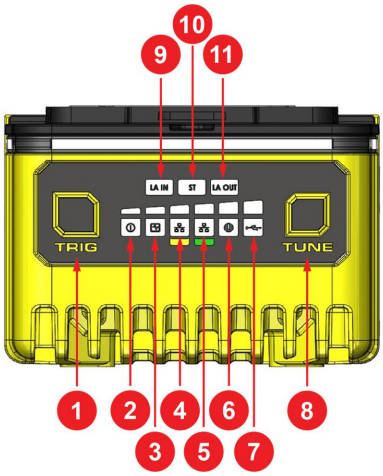

Number	Description
1	Trigger button
2	Power LED indicator
3	Train status LED indicator

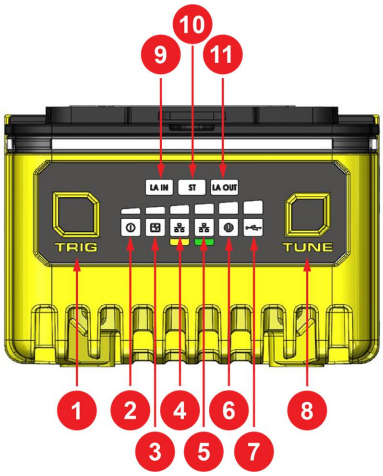

4	Ethernet 1 status LED
5	Ethernet 0 status LED
6	Error LED indicator
7	Coglink/USB-C status LED
8	Tune button
9	EtherCAT Link Activity In LED
10	EtherCAT Status LED
11	EtherCAT Link Activity Out LED

Indicator LEDs

The table summarizes the functions of the indicator LEDs on In-Sight 3900 vision systems.

Indicator	Color/Status	Meaning
Ring LED indicator	GREEN, blinking	The Ring LED indicators blink in GREEN when the vision system produces a pass result. **Note**: In case of a pass result, the Pass/Fail indicator LED is also blinking in GREEN.
	RED, blinking	The Ring LED indicators blink in RED when the vision system produces a fail result. **Note**: In case of a fail result, the Pass/Fail indicator LED is also blinking in RED.
	WHITE	The Ring LED indicators are WHITE when you trigger the Identify function in In-Sight Vision Suite.
Power LED indicator	ON	The vision system is ON.
	OFF	The vision system is OFF.
Train/Trigger status LED indicator	ON	If the vision system has a trained code, this LED is GREEN.
	OFF	If the vision system has no trained code, this LED is OFF.
Pass/Fail LED indicator	GREEN, blinking	The vision system produces a pass result. **Note**: In case of a pass result, the Ring LED indicators are also blinking in GREEN.
	RED, blinking	The vision system produces a fail result. **Note**: In case of a fail result, the Ring LED indicators are also blinking in RED.
Communication LED indicators	ON	The Communication LEDs blink when the vision system detects network traffic. The color of each LED depends on the network speed: • RED: 10 Mbps or below • YELLOW: 10 Mbps to 100 Mbps • GREEN: 1000 Mbps **Note**: The vision system monitors network speed and updates the Communication LED every 50 ms.
	OFF	The LED is OFF when there is no Ethernet connection.
Error	ON	The LED is ON when the vision system detects an error.
LA IN	ON	The Link Activity LED is ON when there is an EtherCAT connection.
	ON, flickering	The Link Activity LED flickers during EtherCAT data transfer.
	OFF	The Link Activity LED is OFF when there is no EtherCAT connection.

Indicator	Color/Status	Meaning
ST	GREEN ON	The Status LED is steady GREEN when the EtherCAT connection is running.
	GREEN, blinking	The Status LED blinks GREEN when the EtherCAT connection is in PRE-OPERATIONAL state.
	GREEN, single flash	The Status LED flashes once GREEN when the EtherCAT connection is in SAFE-OPERATIONAL state.
	GREEN OFF	The GREEN Status LED is OFF when the EtherCAT connection is in INIT state.
	RED ON	The Status LED is RED when a critical communication or application controller occurs.
	RED, double flash	The Status LED is RED when an EtherCAT Watchdog Timeout error occurs.
	RED, single flash	The Status LED is RED when a local error occurs.
	RED, blinking	The Status LED is RED when a general configuration error occurs.
	RED OFF	The Status LED is OFF when there is no error, the EtherCAT communication of the vision system is running.
LA OUT	ON	The Link Activity LED is ON when there is an EtherCAT connection.
	ON, blinking	The Link Activity LED blinks during EtherCAT data transfer.
	OFF	The Link Activity LED is OFF when there is no EtherCAT connection.

In-Sight 3900 Series Accessories

You can purchase the following components separately. For a list of options and accessories, contact your local Cognex sales representative.

Lenses

This section lists the lenses supported by the In-Sight 3900 vision system. The tables group lenses by vision system configuration and indicate lens cover compatibility.

Note:
Keep the following in mind:

- Moritex lenses previously had the prefix LMC in the product number (for example ML-M0625UR was previously named LMC-ML-M0625UR). If you purchased a Moritex lens under the previous product number, you can still refer to the compatibility tables using the product number without the LMC prefix.
- For more information about lens focus distance ranges, see *High-Speed Liquid Lens Focus Distances* on page 71.

In-Sight 3901 and 3905 Lenses

The following table shows the lenses compatible with the In-Sight 3901 and 3905 vision systems:

Accessory	Product Number	Illustration	IS3901	IS3905 (3 MP mode)	IS3905	Compatible Lens Covers
8 mm High Speed Liquid Lens - Visible and Near-IR Light **Note**: Compatible with IS3901 if using Multi Torch. Compatible with IS3901/3905 (3 MP mode) if using C-mount cover.	CLN-C08F8FS-HSLL		✓	✓		15, 45 mm lens covers
10 mm High Speed Liquid Lens - Visible and Near-IR Light **Note**: Compatible with IS3901 if using Multi Torch. Compatible with IS3901/3905 (3 MP mode)/3905 if using C-mount cover.	CLN-C10F5FS-HSLL		✓	✓	✓	

Accessory	Product Number	Illustration	IS3901	IS3905 (3 MP mode)	IS3905	Compatible Lens Covers
16 mm High Speed Liquid Lens - Visible and Near-IR Light	CLN-C16F8FS-HSLL		✓	✓	✓	45 mm lens covers
24 mm High Speed Liquid Lens - Visible and Near-IR Light	CLN-C24F6FS-HSLL		✓	✓	✓	
35 mm High Speed Liquid Lens - Visible and Near IR Light	CLN-C35F8FS-HSLL		✓	✓	✓	
16 mm Manual Focus lens for Multi Torch - Visible and Near IR Light	CLN-C16F8FS		✓	✓	✓	
24 mm Manual Focus lens for Multi Torch - Visible and Near-IR Light	CLN-C24F6FS		✓	✓	✓	
8 mm Moritex HR series lens	ML-M0818HR		✓			
12 mm Moritex HR series lens	ML-M1218HR		✓			45 60, 75 mm lens covers
16 mm Moritex HR series lens	ML-M1618HR		✓			
25 mm Moritex HR series lens	ML-M2518HR		✓			
35 mm Moritex HR series lens	ML-M3520HR		✓			
50 mm Moritex HR series lens	ML-M5025HR		✓			60, 75 mm lens covers

Accessory	Product Number	Illustration	IS3901	IS3905 (3 MP mode)	IS3905	Compatible Lens Covers
4 mm Moritex UR series lens	ML-M0420UR		✓	✓	✓	N/A, Cognex recommends using connector covers (380-CON-PLUGS)
6 mm Moritex UR series lens	ML-M0625UR		✓	✓	✓	
8 mm Moritex UR series lens	ML-M0822UR		✓	✓	✓	45 mm lens cover
12 mm Moritex UR series lens	ML-M1218UR		✓	✓	✓	45, 60, 75 mm lens covers
16 mm Moritex UR series lens	ML-M1616UR		✓	✓	✓	
25 mm Moritex UR series lens	ML-M2516UR		✓	✓	✓	
35 mm Moritex UR series lens	ML-M3520UR		✓	✓	✓	
50 mm Moritex UR series lens	ML-M5025UR		✓	✓	✓	60, 75 mm lens covers
75 mm Moritex UR series lens	ML-M7528UR		✓	✓	✓	75 mm lens cover
100 mm Moritex UR series lens (supporting 2.5-micron pixels)	ML-U10028UR-18C		✓	✓	✓	

In-Sight 3916 and 3925 Lenses

The following table shows the lenses compatible with the In-Sight 3916 and 3925 vision systems:

Accessory	Product Number	Illustration	IS3916 (8 MP mode)	IS3916 (12 MP mode)	IS3916	IS3925	Compatible Lens Covers
16 mm HSLL - high resolution	CLN-C16F65-HSLL-HR		✓	✓			60, 75 mm lens covers
25 mm HSLL - high resolution	CLN-C25F65-HSLL-HR		✓	✓			
35 mm HSLL - high resolution	CLN-C35F06-HSLL-HR		✓	✓			
6 mm Moritex SR series lens	ML-U0618SR-18C		✓	✓	✓		N/A, Cognex recommends using connector covers (380-CON-PLUGS)
8 mm Moritex SR series lens	ML-U0817SR-18C		✓	✓	✓		
12 mm Moritex SR series lens	ML-U1217SR-18C		✓	✓	✓		75 mm lens cover
16 mm Moritex SR series lens	ML-U1615SR-18C		✓	✓	✓		
25 mm Moritex SR series lens	ML-U2515SR-18C		✓	✓	✓		
35 mm Moritex SR series lens	ML-U3518SR-18C		✓	✓	✓		60, 75 mm lens covers
50 mm Moritex SR series lens	ML-U5022SR-18C		✓	✓	✓		
100 mm Moritex UR series lens (supporting 2.5-micron pixels)	ML-U10028UR-18C		✓	✓	✓		75 mm lens cover

Accessory	Product Number	Illustration	IS3916 (8 MP mode)	IS3916 (12 MP mode)	IS3916	IS3925	Compatible Lens Covers
8 mm Moritex ZR series lens	ML-U0828ZR-19C		✓	✓	✓	✓	N/A, Cognex recommends using connector covers (380-CON-PLUGS)
12 mm Moritex ZR series lens	ML-U1228ZR-19C		✓	✓	✓	✓	75 mm lens cover
16 mm Moritex ZR series lens	ML-U1628ZR-19C		✓	✓	✓	✓	
25 mm Moritex ZR series lens	ML-U2528ZR-19C		✓	✓	✓	✓	
35 mm Moritex ZR series lens	ML-U3528ZR-19C		✓	✓	✓	✓	
50 mm Moritex ZR series lens	ML-U5028ZR-19C		✓	✓	✓	✓	

Telecentric Lenses

Moritex telecentric lenses support all In-Sight 3900 configurations. Telecentric lenses provide high-contrast, high-resolution, and low-distortion results by reducing perspective errors and magnification changes. These lenses are suitable for alignment and guidance applications.

Note: For more information, download the Telecentric Lens Catalog from https://www.cognex.com/en/tools-and-resources/resource-center/telecentric-lens-catalog.

Lens Covers

Accessory	Product Number	Illustration
15 mm Plastic Lens Cover	COV-380-CMNT-15	
45 mm Plastic Lens Cover	COV-380-CMNT-45	
60 mm Plastic Lens Cover	COV-380-CMNT-60	
75 mm Plastic Lens Cover	COV-380-CMNT-75	
30 mm Lens Cover Extender	COV-7000-CMNT-LGX	
Multi Torch front cover - Diffused	380-TORCH-COVDIF	
Multi Torch front cover - Cross-Polarized	380-TORCH-COVPOL	
Multi Torch front cover - Clear	380-TORCH-COVCLR	
ESD safe Multi Torch front cover	380-TORCH-COVCLESD	
Torch-HR front cover - Polarizer	380-TORCH-HR-COVPL	
Torch-HR front cover - Clear	380-TORCH-HR-COVCL	
Torch-HR front cover - Diffuse	380-TORCH-HR-COVDF	
Dome Attachment for 380 platform Multi Torch and DataMan HPIT	380-TORCH-DOME	
Covers for integrated light and autofocus lens connectors on faceplate	380-CON-PLUGS	

Integrated Lights

Accessory	Product Number	Illustration
Multi Torch Accessory Kit for autofocus lenses (RGBW-IR Light w/ ToF and Laser Aimer) Includes: • Multi Torch Illumination module • Mount for illumination module (High Speed Liquid Lenses only) • Diffused cover • Illumination PCB • 2 mm hex tool Accessory model 50231	380-TORCH-MULTI-AF	
Multi Torch Accessory Kit for manual focus lenses (RGBW-IR w/ ToF and Laser Aimer) Includes: • Multi Torch Illumination module • Mount for illumination module (manual focus lenses only) • Diffused cover • Illumination PCB • 2 mm hex tool Accessory model 50231	380-TORCH-MULTI-MF	
Multi Torch PCB	380-LIGHT-PCB	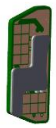
Red Torch-HR Accessory kit for high resolution In-Sight 3900 models Includes: • Red Torch-HR illumination module • Diffused cover • Illumination cable • 2 mm hex tool Accessory model: 50190	380-TORCH-RED-HR	

Accessory	Product Number	Illustration
White Torch-HR Accessory kit for high resolution In-Sight 3900 models Includes: • White Torch-HR illumination module • Diffused cover • Illumination cable • 2 mm hex tool Accessory model: 50190	380-TORCH-WHITE-HR	

WARNING: Multi-Torch and Torch-HR devices equipped with a Time-of-Flight sensor, the device has been tested to be under the limits of a Class 1 Laser device.



CAUTION: Multi Torch and Torch-HR devices equipped with a target aimer have been tested in accordance with IEC 60825-1. 3rd ed. 2014, and have been certified to be under the limits of a Class 2 Laser device.

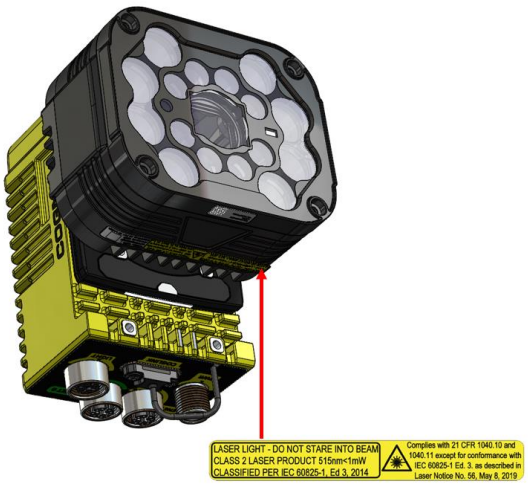

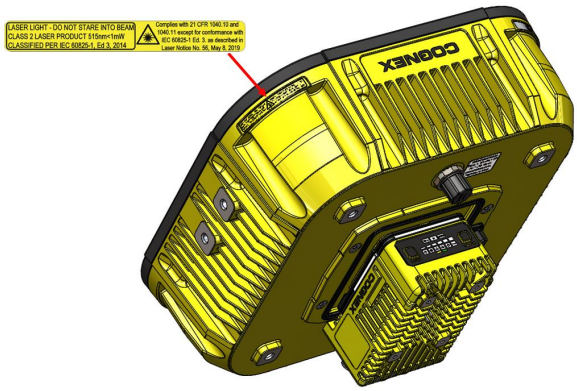

Integrated Light Accessories

Accessory	Product Number	Illustration	IS3901	IS3905 (3 MP mode)	IS3905
Blue bandpass filter for Multi Torch	380-TORCH-BP450		✓	✓	✓
Red bandpass filter for Multi Torch	380-TORCH-BP635		✓	✓	✓

Supported Lights

The In-Sight 3900 supports analog lights and smart lights.

There are over 90 smart lights in a variety of sizes and forms, which are available separately. All smart lights are available in red, blue, or white colors. This document only provides an overview of the types of smart lights that are available. For a detailed list of the supported lights in all available sizes, go to Machine Vision Lighting or contact Cognex support.

Note:
In-Sight 3900 supports analog lights which need a different setting for intensity control. For more information, see the following documentation:

- *External Light Connector* on page 78
- The *Camera Configuration* section of the *In-Sight Vision Suite Software Manual* on the Cognex Support Site

The following table provides information on the types of lights available:

Accessory	Product Number	Illustration
Bar Lights Available lengths: 41-242 mm	CEL-BA	
Backlights Available lengths: 27-224 mm	CEL-BL	
Coaxial Lights Available lengths: 20-50 mm	CEL-CX	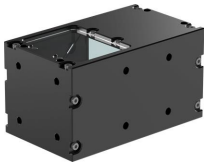
Dome Lights Available diameters: 80-285 mm	CEL-DM3	
Diffuse Square Lights Available lengths: 48-120 mm	CEL-DQH	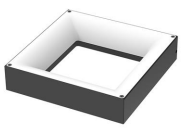

Accessory	Product Number	Illustration
Diffuse Ring Lights Available diameter: 150 mm	CEL-DRW	
Ring Lights Available diameters: 42-210 mm	CEL-RH	
Low-Angle Ring Lights Available lengths: 75-120 mm	CEL-RL	

Mounting Brackets

Accessory	Product Number	Illustration
U-shaped mounting bracket for In-Sight 3900 with Torch-HR, M6 mounting holes	DMBK-PVT-HPIT-380	
Mounting bracket with M3, M4 and 1/4 - 20 mounting holes	BKT-INS-01	
Converter mounting bracket with M3 socket head screws/wrench	ISB-7000-7K	
Converter mounting bracket with Phillips flat head M3 screws and M4 screws	ISB-7000-5K	

Cables

This section lists the cables supported by the In-Sight 3900 vision system. The tables group cables by function.

Note:
Cables are sold separately.

For cable setup instructions, see *Connecting Cables* on page 36.

Power and Breakout Cables

The Breakout cable provides connections to an external power supply, the acquisition trigger input, general-purpose inputs, high-speed outputs, and RS-232 serial communications. The Breakout cable is not terminated.

For cable specifications, see *Breakout Cable* on page 75.

Accessory	Product Number	Illustration
Power and I/O Breakout Cable, M12-12 to Flying Lead	CCB-PWRIO- xx (straight, xx specifies length: 5m, 10m, 15m)	
Power and I/O Breakout Cable, M12-12 to Flying Lead	CCB-PWRIO-xxR (right-angled, xx specifies length: 5m, 10m, 15m)	

Ethernet Cables

The Ethernet cable is used to connect the vision system to other network devices.

For cable specifications, see *Ethernet Cable* on page 76.

Accessory	Product Number	Illustration
Ethernet Cable, X-coded M12-8 to RJ-45	CCB-84901-2001-xx (straight, xx specifies length: 2m, 5m, 10m, 15m, 30m)	
Ethernet Cable, X-coded M12-8 to RJ-45	CCB-84901-2RBT-xx (straight, xx specifies length: 2m, 5m, 10m)	
Ethernet Cable, X-coded M12-8 to RJ-45	CCB-84901-2002-xx (right-angled, xx specifies length: 2m, 5m, 10m)	

EtherCAT Adapter Cables

The EtherCAT adapter cable breaks out the EtherCAT input and output ports of the vision system to individual connectors.

For cable specifications, see *EtherCAT Adapter Cable* on page 76.

Accessory	Product Number	Illustration
EtherCAT Adapter Cable	CCB-ECAT-30	

External Light Cables

The LIGHT connector of the vision system is used to connect the External Light cable to an external lighting device, providing power and strobe control. You can connect the External Light cable to either a continuous or strobed lighting device.

Trigger cables allow the vision system to strobe lights that do not natively support strobing.

For cable specifications, see *External Light Connector* on page 78.

Accessory	Product Number	Illustration
External Light Cable, Yellow **Note**: This cable supports intensity control.	IVSL-5PM12-J300 IVSL-5PM12-J500 IVSL-5PM12-J1000 IVSL-5PM12-J2000	
External Light Cable, Black **Note**: This cable supports intensity control and is used with standard SVL lights.	IVSL-M12-NSB-300 IVSL-M12-NSB-1000 IVSL-M12-NSB-2000	
External Light Cable, Grey **Note**: This cable does not support intensity control.	CCB-M12LTF-xx (xx specifies length: 0.5m, 1m, 2m, 5m)	
Light Extension Cable, 1 m	CCB-M12-5P-1	
Light Extension Cable, 5 m	CCB-M12-5P-5	
Trigger Cable, Black M12 to M12 cable with a small in-line capacitor, 0.5 m	ICQ-CB-0.5-IFL-M12	
Trigger Cable, Moritex, M12 (M)-M12 (F), 1 m	M-M12-1M-M12-1W-TR	
Trigger Cable, Moritex, M12 (M)-M12 (F), 3 m	M-M12-3M-M12-1W-TR	

Setting Up Your In-Sight Vision System

Read this section to learn how the vision system connects to its standard components and accessories.

Note: If a standard component is missing or damaged, immediately contact your Cognex Authorized Service Provider (ASP) or Cognex Technical Support.

Mounting the Vision System

The vision system provides mounting holes for attachment to a mounting surface.

CAUTION: The vision system has to be grounded, either by mounting the vision system to a fixture that is electrically grounded or by attaching a wire from the mounting fixture of the vision system to frame ground or Earth ground. If a ground wire is used, it has to be attached to one of the mounting points on the bottom plate of the vision system and not to the mounting points on the front of the vision system.

Mounting Bracket (BKT-INS-01)

To mount the vision system using the BKT-INS-01 mounting bracket:

1. Align the mounting bracket with the mounting holes on the vision system. If using the M3 mounting holes, you can attach the mounting bracket in either orientation.
2. Insert the M3 screws into the mounting holes and tighten. The maximum torque is 0.90 Nm (8 in-lb).

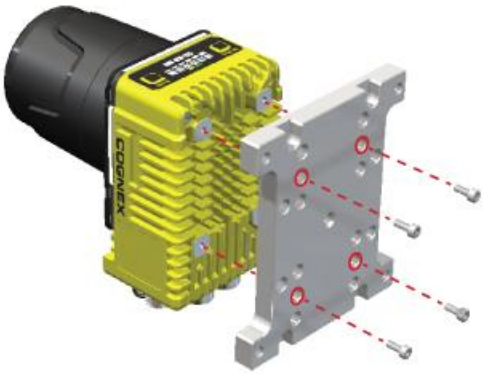

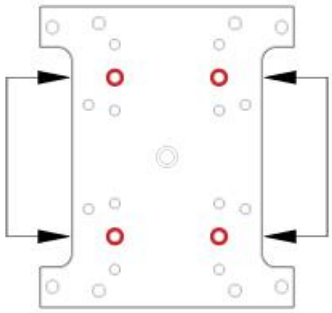

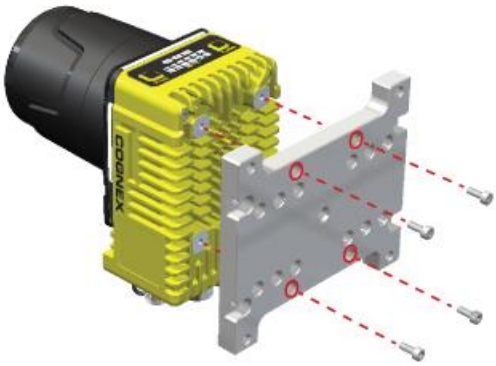

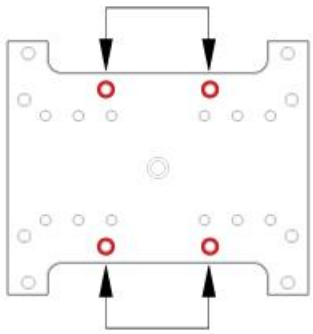

Converter Mounting Bracket (ISB-7000-7K)

To mount the vision system using the ISB-7000-7K converter mounting bracket:

1. Align the converter mounting bracket with the mounting holes on the vision system.
2. Insert the M3 screws into the mounting holes and use a 2.5 mm hex wrench to tighten. The maximum torque is 0.90 Nm (8 in-lb).



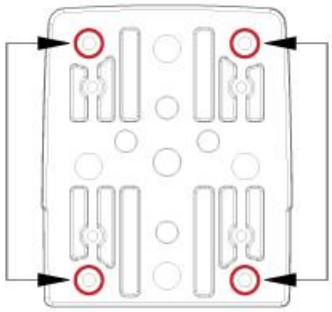

Converter Mounting Bracket (ISB-7000-5K)

To mount the vision system using the ISB-7000-5K converter mounting bracket:

1. Align the converter mounting bracket with the mounting holes on the vision system.
2. Insert the Phillips flat head screws into the mounting holes and tighten. The maximum torque is 0.56 Nm (5 in-lb).



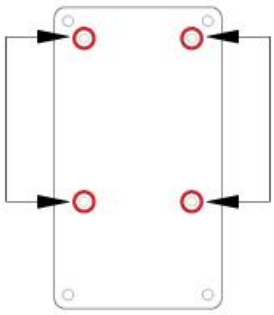

Installing Lenses and Lighting

The following sections describe how to install lenses and lighting accessories.

Installing the Bandpass Filter

To install the bandpass filter:

1. Attach the back of the adapter to the sensor.

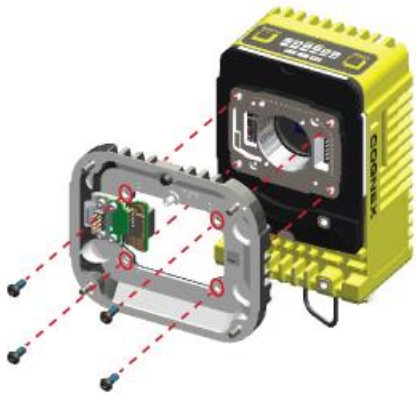

2. Insert the lens and tighten the two captive screws.

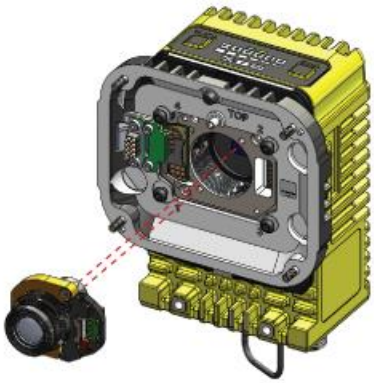

3. Attach the front of the adapter to the sensor.



4. Observing the tightening sequence below, tighten all four screws to 0.5 Nm using a torque wrench.

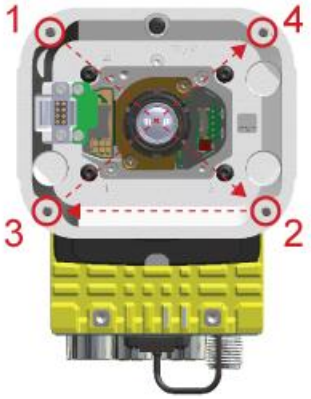

5. Remove the front cover of the adapter.



6. Insert the bandpass filter into the sensor.



7. Replace the front cover of the adapter.



Installing Lenses with Multi Torch

This procedure is valid for both the High Speed Liquid Lens and the Manual Lens installations.

1. Remove the adapter from the sensor.



2. Unscrew the two captive screws holding the lens.



3. Remove the lens from the sensor. Do not pull on the lens itself but on the housing of the lens.

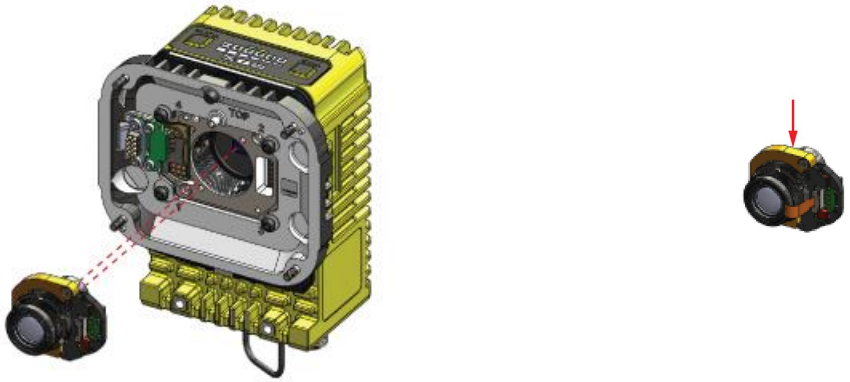

4. Insert the new lens and tighten the two captive screws.



5. Tighten one of the M2 x 8 mm screws halfway, then tighten the other M2 x 8 mm screw halfway. Incrementally tighten each screw to 0.34 Nm using a torque wrench.



6. Replace the adapter on the sensor.



7. Observing the tightening sequence below, tighten all four screws to 0.5 Nm using a torque wrench.

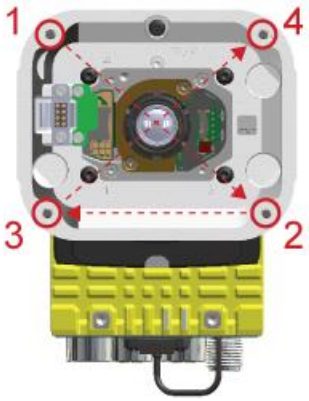

Attaching Lens Cover

To attach any of the lens covers available for the vision system:

1. Place the base of the lens cover on the reader and screw it in. The recommended torque is 0.5 Nm.





2. Attach the top part and turn it clockwise until it latches on the base.





Installing High Speed Liquid Lens with Torch-HR

To install high speed liquid lens with Torch-HR:

1. Cautiously snap the cable into the vision system. Connect the side with the black cover to the vision system, and connect the side with the 2D code to the Torch-HR.



2. Screw in the four screws to attach the lens to the vision system.

> **Note**: When using a C-mount lens, screw the lens into the C-mount threads instead of attaching the liquid lens. The illumination module installation is the same.



3. Bend the other end of the cable and feed the cable through the back of the illumination module.

CAUTION: Only snap the cable into place after you have completely attached the vision system to the illumination module with the screws. Otherwise, the cable can break.

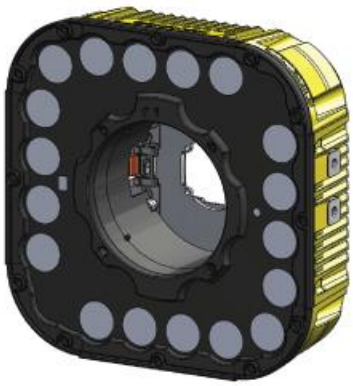

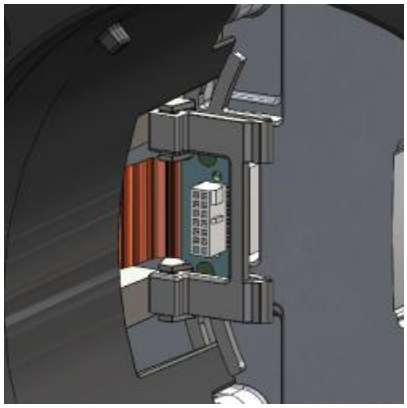



4. Screw in the four screws from the illumination module into the vision system. Tighten each screw to 0.75 Nm.

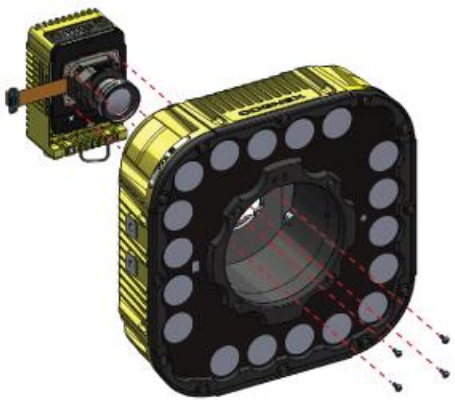

5. Snap the cable into place in the illumination module.

6. Align the slots in the cover with the illumination module. Twist slightly to lock the cover in.

Note: You can remove the lens cover at any time by twisting it in the opposite direction. Removing the lens cover allows for access to the lens or installing a new lens without disassembling the Torch-HR.

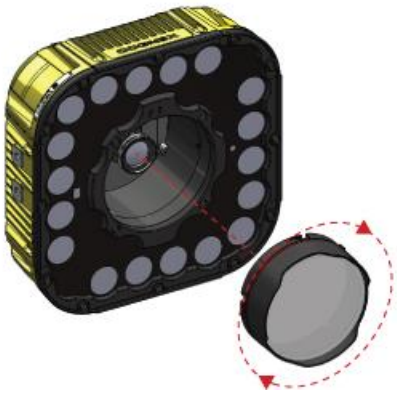

Remove the Illumination Accessory PCB

If the illumination accessory (380-TORCH-MULTI-AF or 380-TORCH-MULTI-MF) must be uninstalled from the vision system, complete the following steps to safely remove the PCB and avoid damage to the vision system.

CAUTION: Do not hot-plug the illumination accessory. Verify that the vision system is not receiving power when you connect or disconnect the illumination accessory. Failure to remove power during this procedure may result in damage to the vision system, or the illumination accessory, or both.

1. Remove power from the vision system.
2. Use a 2 mm hex wrench to remove the four spacer screws. Remove the spacer.



3. The vision system faceplate includes two lift points on either side of the PCB. Position an insulated extractor tool, for example, Jonard Tools S-340 DIP/IC Extractor, under the edges of the PCB.



4. Once the extractor is engaged under the edges of the PCB, gently pull upward to disengage the PCB from the internal connector and remove the PCB.



5. Verify the removal process did not damage mating components.

Connecting Cables

This section describes how to connect the cables used with your vision system.

CAUTION: All cable connectors are keyed to fit the connectors on the vision system. Do not force the connections or damage may occur.

Connecting the EtherCAT Cable

Connect the EtherCAT adapter cable to the ENET0 connector of the vision system.

Note: Do not plug the EtherCAT adapter cable into an Ethernet network. You could damage your Ethernet network and disable your EtherCAT set.

The vision system provides two 100 MBit EtherCAT ports in a single physical connector through the ENET0 connector. One of the ports acts as input, and the other one as output.

- If you connect an M12 to RJ-45 Ethernet cable to the EtherCAT connector, you connect to the IN port.
- If you connect with the EtherCAT adapter cable, both the IN and OUT ports are available.



EtherCAT Physical Topologies

The vision system supports the following physical topologies:

- Star
- Line
- Ring

Star EtherCAT Topology

The star topology connects each vision system to the PLC individually. This topology offers increased availability, as each vision system can be reached individually.

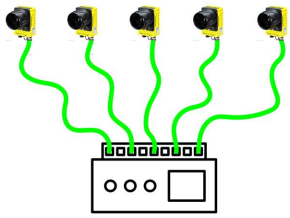

Line EtherCAT Topology

The line topology connects the vision systems in a daisy chain. The output of one adapter cable is plugged into the input of the next one. The line starts at the output from the PLC and ends at the input connector of the last vision system. This topology reduces the cabling needed to connect all vision systems.

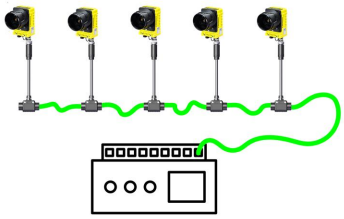

Ring EtherCAT Topology

The ring topology connects the vision systems in a daisy chain. The output of one adapter cable is plugged into the input of the next one. The ring starts at the output from the PLC, and ends at the output of the last vision system connected back to the PLC. This topology offers redundancy, since a vision system can be reached from either direction.

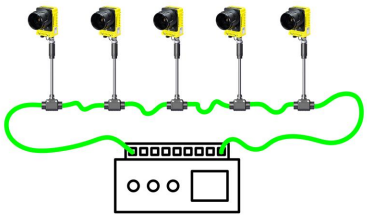

Connecting the Ethernet Cable

CAUTION: The Ethernet cable shield has to be grounded at the far end. If the far end device is not grounded, add a ground wire in compliance with local electrical codes. The cable is typically plugged into a switch or router, which has to have a grounded Ethernet connector. Use a digital voltmeter to validate the grounding.

1. Connect the M12 connector of the Ethernet cable to the green ENET0 connector of the vision system.
2. Connect the RJ-45 connector of the Ethernet cable to a switch, router, or PC.

Connecting the Power and I/O Breakout Cable

CAUTION: To reduce emissions, connect the far end of the Breakout cable shield to frame ground.

1. Verify that the 24 V DC power supply is unplugged and not receiving power.
2. Attach the +24 V DC connector of the Power and I/O Breakout cable and Ground wires to the corresponding terminals on the power supply. For more information, see *Breakout Cable* on page 75.
3. Attach the M12 connector of the Power and I/O Breakout Cable to the 24 V DC connector of the vision system.
4. Restore power to the 24 V DC power supply and turn it on if necessary.

Note:

- Perform wiring or adjustments to I/O devices when the vision system is not receiving power.
- You can clip unused wires short or use a tie made of non-conductive material to tie them back. Keep bare wires separated from the +24 V DC wire.

Connecting Right-Angled Cables

When connecting right-angled Ethernet and right-angled power cables, route the Ethernet cables toward the back of the vision system and the power cables at an angle away from the Ethernet cables, as shown in the following illustrations.

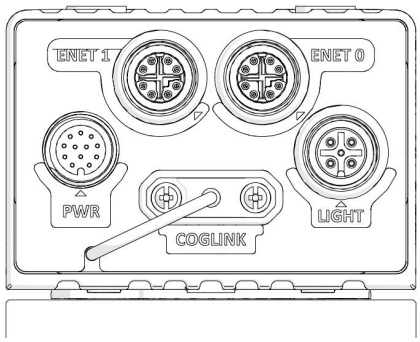

In-Sight 3900 back view

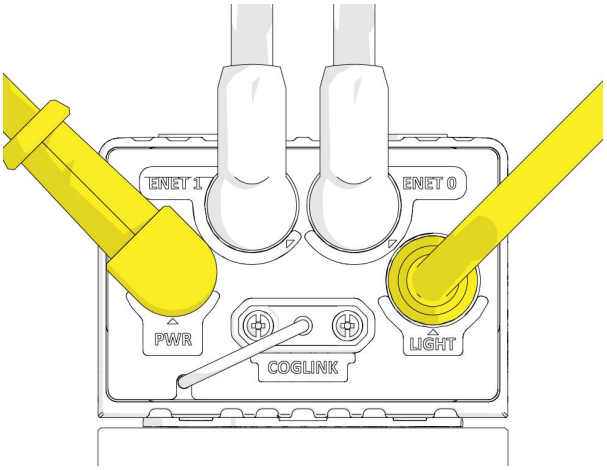

Orientation of right-angled Ethernet and power cables

Using Your In-Sight Vision System

This section provides information on the installation of In-Sight Vision Suite, trigger types, and protocols.

Installing In-Sight Vision Suite

Follow the steps below to install and connect your vision system to the In-Sight Vision Suite.

1. Download the latest version of the In-Sight Vision Suite from support.cognex.com/ and follow the on-screen steps.
2. Connect the 3900 series vision system to your PC.
3. Launch the In-Sight Vision Suite and click **Refresh**.
4. Select a vision system from the list and click **Connect**.

Trigger Types

The In-Sight 3900 vision systems support the following trigger modes:

- **Self**: The vision system acquires an image and runs the job continuously at a time interval you configure.
- **Single** (external trigger): Acquires a single image and runs the current job on the acquired image. The vision system relies on an external trigger source.

External Triggers

If you are using external triggering, you can use any of the following methods to trigger your vision system.

- Press the trigger button on the vision system.
- Send a trigger command over Native Mode.
- Send a trigger through the trigger input line in Spreadsheet.
- Send a trigger through the network using UDP.
- Send a trigger through factory protocols (FFP).
- Send a trigger through the WebHMI trigger button.
- Send a trigger through industrial protocols from a Programmable Logic Controller (PLC).

Industrial Protocols

Industrial Ethernet:

- PROFINET
- EtherNet/IP
- EtherCAT
- SLMP
- ModbusTCP

Data Communication:

- MQTT
- TCP/IP
- (S)FTP
- RS-232C

For more information, see **Industrial Communications** in the *In-Sight Spreadsheet Help* documentation.

Specifications

The following sections list general specifications for the vision system.

In-Sight 3900 Series Vision System

Specification	In-Sight 3900
Job Processing Memory	8 GB
Lens Type	C-Mount, Cognex High Speed Liquid Lens Autofocus, or Cognex manual focus lens.
Trigger	1 opto-isolated, acquisition trigger input.
Discrete Inputs	1 opto-isolated, acquisition trigger input. Up to 3 general-purpose inputs when connected to the Breakout cable.
Discrete Outputs	Up to 4 high-speed outputs when connected to the Breakout cable.
Status LEDs	Pass/Fail LED and Indicator Ring, Network LED, Error LED, and EtherCAT status LEDs.
High Speed Liquid Lens Lifespan	Number of focus cycles: 1800 M cycles
Job and Image Storage Memory	128 GB non-volatile flash memory, unlimited storage using remote network device.
Image Processing Memory	Dynamic allocation shared with Job Processing Memory
Network Communication	2 Ethernet ports, 1 Gb port (ENET0) for Industrial Ethernet and data communication and configuration 2.5 Gb port (ENET1) for data communications and configuration (no Industrial Ethernet) Both support DHCP, static, and link-local IP address configuration. 10/100/1000/2500 BaseT with auto MDIX. IEEE 802.3 TCP/IP protocol
Communication Protocols	Industrial Ethernet: • PROFINET • EtherNet/IP • EtherCAT • SLMP • ModbusTCP Data Communication: • MQTT • TCP/IP • (S)FTP • RS-232C
Power Consumption	24 V DC ± 10%, 2.0 A maximum.
Power Output	24 V DC at 1.0 A maximum to external light.
Material	Die-cast and extruded aluminum and zinc housing.

Specification	In-Sight 3900
Finish	Painted.
Mounting	Four M3 threaded mounting holes. See *Mounting Brackets* on page 21 for supported mounts. Pattern: 38.5 × 58.5 mm (1.52 × 2.60 in)
Weight	In-Sight 3900 with no accessories attached: 768 g (27.1 oz.). • with 15 mm plastic C-mount cover (COV-380-CMNT-15): 806 g (28.4 oz.) - no lens included. • with 45 mm plastic C-Mount cover (COV-380-CMNT-45): 832 g (29.4 oz.) - no lens included. • with 60 mm plastic C-Mount cover (COV-380-CMNT-60): 842 g (29.5 oz.) - no lens included. • with 75 mm plastic C-Mount cover (COV-380-CMNT-75): 851 g (30.0 oz.) - no lens included. • with Multi-Torch Illumination, High Speed Liquid Lens (16 mm), and standard front cover: 1010 g (35.6 oz.) • with Multi-Torch Illumination, High Speed Liquid Lens (16 mm), and dome attachment: 1137 g (40.1 oz.) • with Torch HR Illumination, High Speed Liquid Lens (25 mm): 2956 g (94.8 oz.)
Ambient/Environment Temperature	0° C to 40° C (32° F to 104° F)
Storage Temperature	-20° C to 80° C (-4° F to 176° F)
Humidity	< 95% non-condensing
Environmental	Altitude: 2000 m, indoor use only, pollution degree II
Protection	IP67 with all cables properly attached (or the provided connector plug installed) and the IP67-rated cover, or Multi Torch attachment properly installed.
Shock (Shipping and Storage)	IEC 60068-2-27: 18 shocks (3 shocks in each polarity in each [X, Y, Z] axis) 80 Gs (800 m/s^2 at 11 ms, half-sinusoidal) with cables or cable plugs and a 150 gram or lighter lens attached.
Vibration (Shipping and Storage)	IEC 60068-2-6: vibration test in each of the three main axis for 2 hours at 10 Gs (10 to 500 Hz at 100 m/s^2 / 15 mm) with cables or cable plugs and a 150 gram or lighter lens attached.
Regulations/Conformity	CE, FCC, KCC, TÜV SÜD NRTL, EU RoHS, China RoHS

In-Sight 3900 Series Vision System Image Sensor

The following table describes the image sensor specifications for In-Sight 3901 and In-Sight 3905.

Specification	IS3901M	IS3901C	IS3905M	IS3905C
Bit Depth	8-bit monochrome	24-bit color	8-bit monochrome	24-bit color
Frames Per Second (Maximum, Full Resolution)[1]	125 FPS (250 FPS binned)	125 FPS	32 FPS	
Sensor Type	1/2.3" CMOS, global shutter		2/3" CMOS, global shutter	

[1] Color images require additional job processing.

Specification	IS3901M	IS3901C	IS3905M	IS3905C
Image Sensor Properties	6.3 mm diagonal, 3.45 × 3.45 µm square pixels		11.1 mm diagonal, 3.45 × 3.45 µm square pixels	
Maximum Image Resolution (pixels)	1440 × 1080 (1.6 MP mode)		2448 × 2048 (5 MP mode)	
Additional Selectable Image Resolutions (pixels)	720 × 540 (binned) (0.4 MP mode)	N/A	2048 × 1536 (3 MP mode), 1440 × 1080 (1.6 MP mode)	
Electronic Shutter Speed	19.5 µs to 200,000 µs		19.1 µs to 200,000 µs	

The following table describes the image sensor specifications for In-Sight 3916 and In-Sight 3925.

Specification	IS3916M	IS3916C	IS3925M	IS3925C
Bit Depth	8-bit monochrome	24-bit color	8-bit monochrome	24-bit color
Frames Per Second (Maximum, Full Resolution)[1]	28 FPS		21 FPS	
Sensor Type	1.1" CMOS, global shutter		1.2" CMOS, global shutter	
Image Sensor Properties	16.8 mm diagonal, 2.74 x 2.74 µm square pixels		19.3 mm diagonal, 2.74 x 2.74 µm square pixels	
Maximum Image Resolution (pixels)	5320 × 3032 (16 MP mode)		5320 × 4600 (25 MP mode)	
Additional Selectable Image Resolutions (pixels)	4096 × 3000 (12 MP mode), 2840 × 2840 (8 MP mode)		5320 × 3032 (16 MP mode), 4096 × 3000 (12 MP mode), 2840 × 2840 (8 MP mode)	
Electronic Shutter Speed	29.1 µs to 200,000 µs		29.1 µs to 200,000 µs	

[1] Color images require additional job processing.

Spectral Response Diagrams

The diagrams in this section represent the response of the vision system to different wavelengths of light.

In-Sight 3901 Spectral Response Diagrams

The following diagram represents the response of In-Sight 3901M to different wavelengths of light:

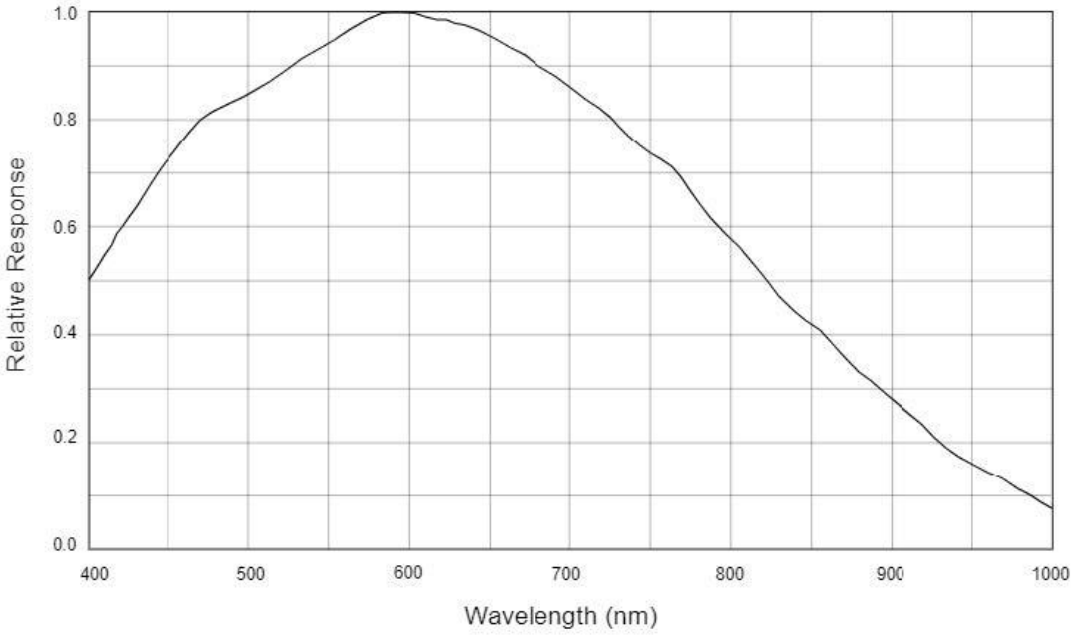

The following diagram represents the response of In-Sight 3901C to different wavelengths of light:

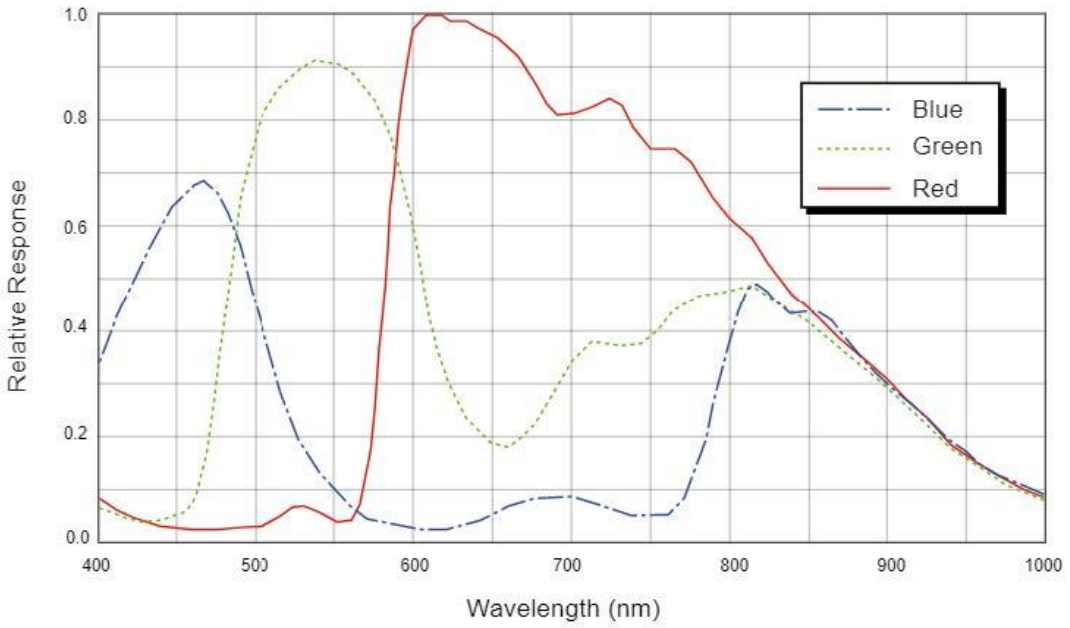

In-Sight 3905 Spectral Response Diagrams

The following diagram represents the response of In-Sight 3905M to different wavelengths of light:

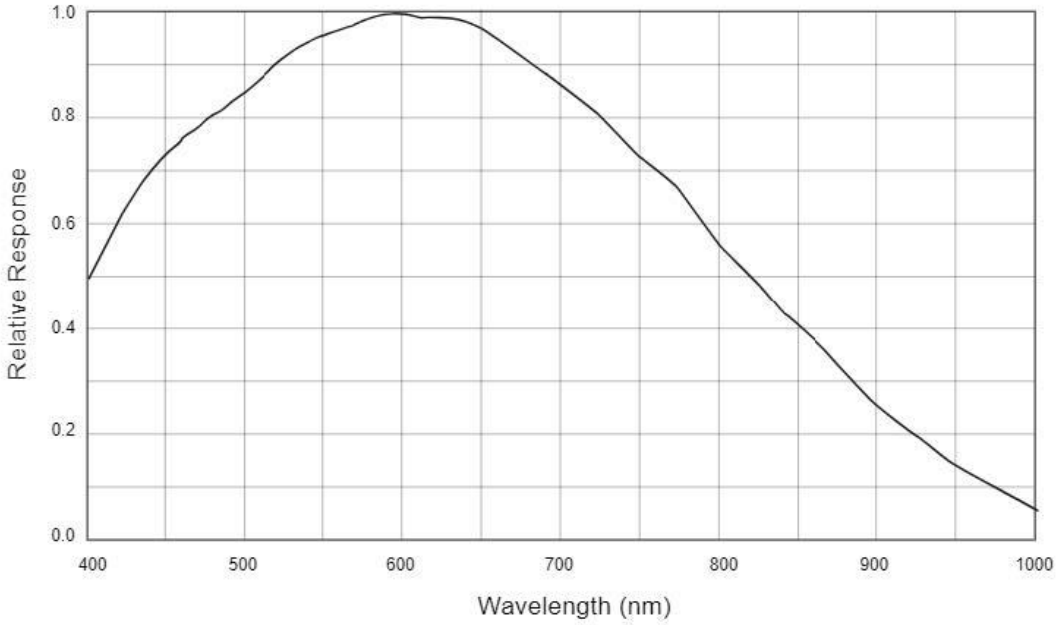

The following diagram represents the response of In-Sight 3905C to different wavelengths of light:

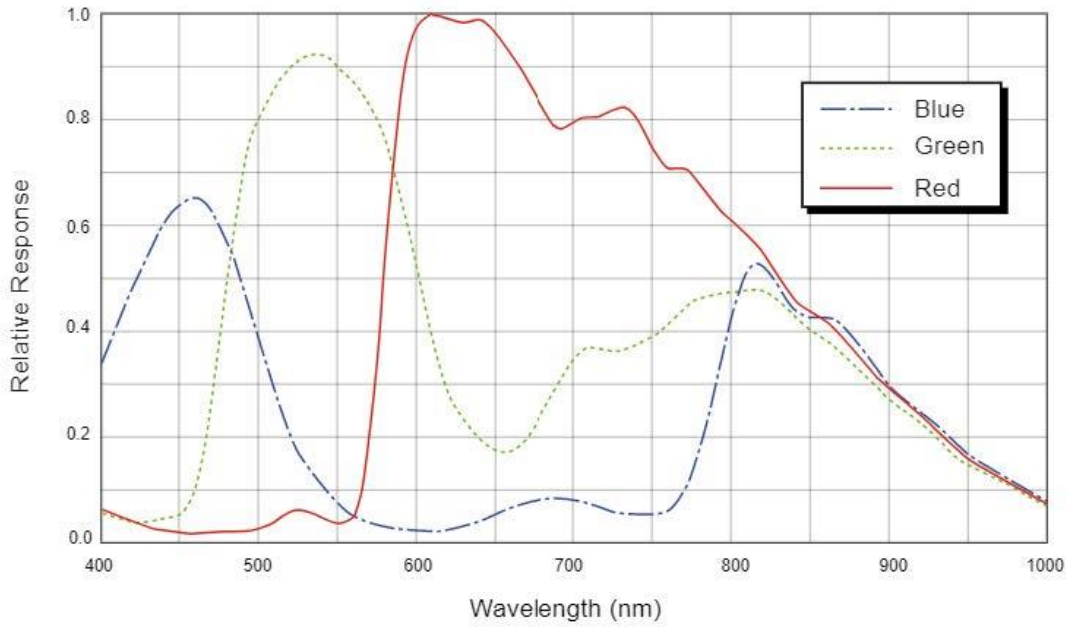

In-Sight 3916 and 3925 Spectral Response Diagrams

The following diagram represents the response of In-Sight 3916M and 3925M to different wavelengths of light:

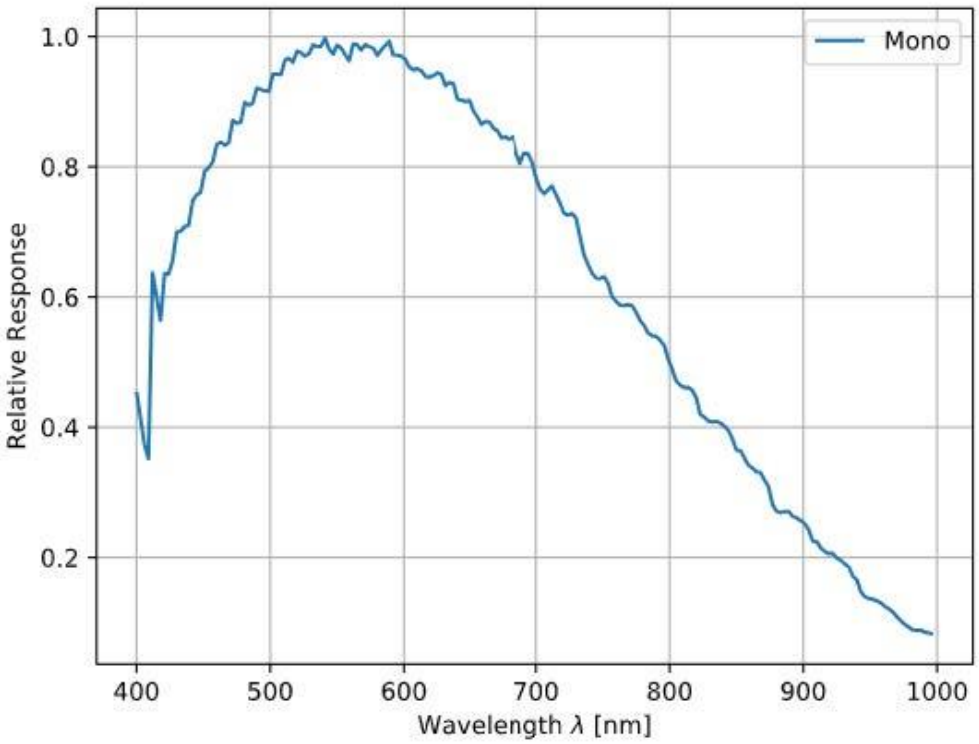

The following diagram represents the response of In-Sight 3905C and 3925C to different wavelengths of light:

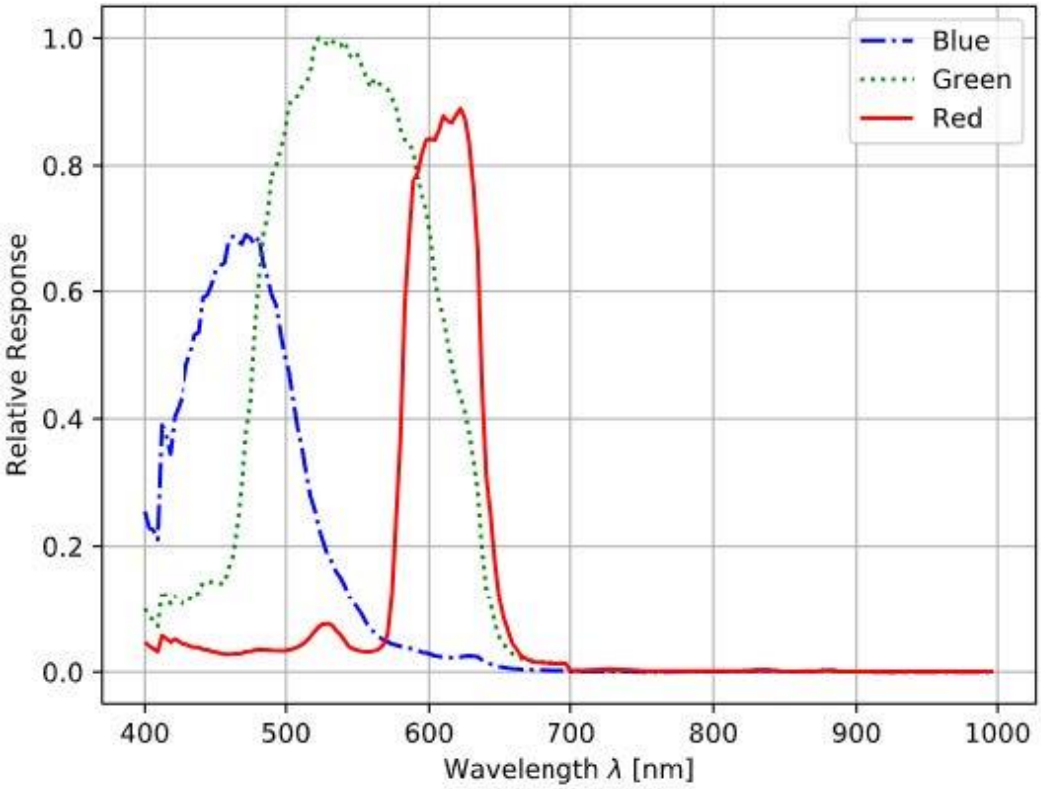

LED Wavelengths

The following table shows LED types and the related peak wavelengths.

Model	LED	Wavelength

In-Sight 3900 with Multi-Torch Illumination	Multicolor	• 453 nm (blue)
		• 525 nm (green)
		• 625 nm (red)
		• Color temperature: 6740 Kelvin (white)
		Chromaticity coordinates acc. to CIE 1931
		  • Cx 0.31 (typ.)
		  • Cy 0.32 (typ.)
		• IR Wavelength: 850 nm
		Note: For color vision systems, select the White option.

In-Sight 3900 with Torch-HR	Red	617 nm (AMBER)
	White	Cx 0.321, Cy 0.327 acc. to CIE 1931 (WHITE)

Multi-Torch RGBW-IR Integrated Lights

The following information describes the maximum supported exposure time and duty cycle for Multi-Torch RGBW-IR integrated lights:

Maximum Exposure	Maximum Duty Cycle
8 ms	4%

Torch-HR Integrated Lights

The following table presents the maximum possible exposure time and duty cycle for Torch HR integrated lights:

Variant	Power	Maximum Power Consumption (A)	Maximum Exposure (ms)	Maximum Duty Cycle
Red	Internal	1.22	10	2%
Red	External	2.25	10	6%
White	Internal	1.15	4	1%
White	External	2.3	4	3%

Dimensions

The following sections list dimensions of the vision system.

Note:

- Dimensions are in millimeters and are for reference purposes only.
- All specifications are for reference purposes only and can change without notice.
- For the In-Sight 3900 technical drawings, see https://support.cognex.com/en/products/in-sight-3900.

In-Sight 3900 - Smart Camera Only

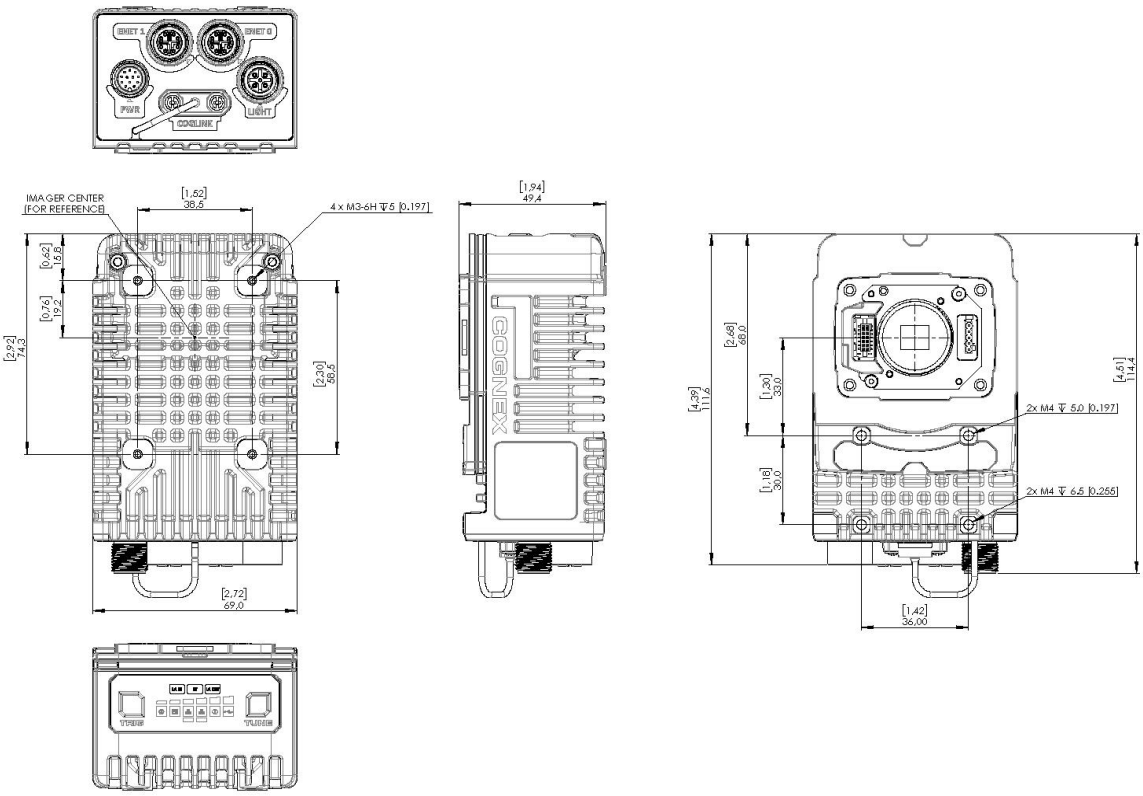

In-Sight 3900 with 15 mm Lens Cover

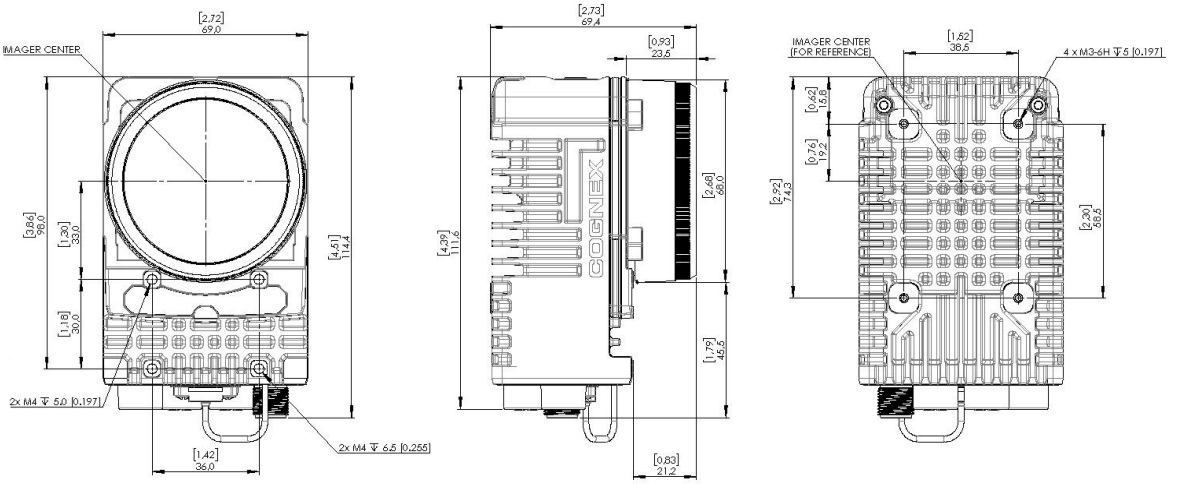

In-Sight 3900 with 45 mm Lens Cover

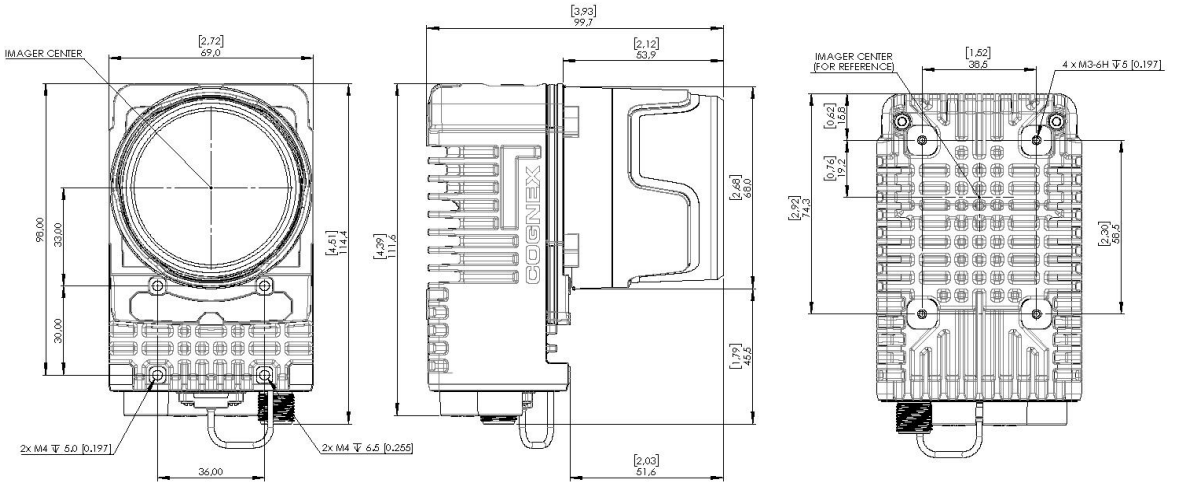

In-Sight 3900 with 60 mm Lens Cover

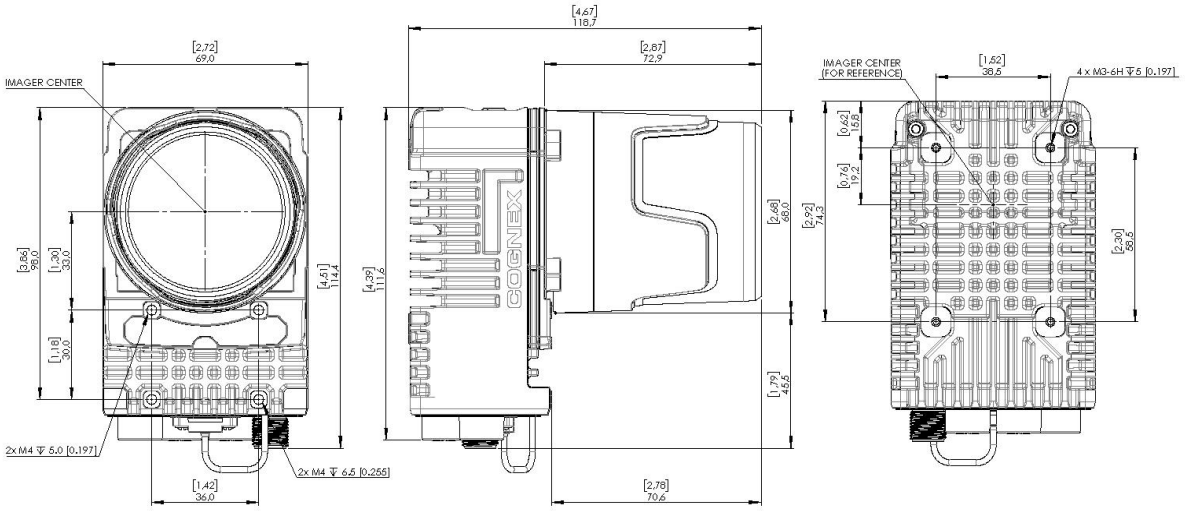

In-Sight 3900 with 75 mm Lens Cover

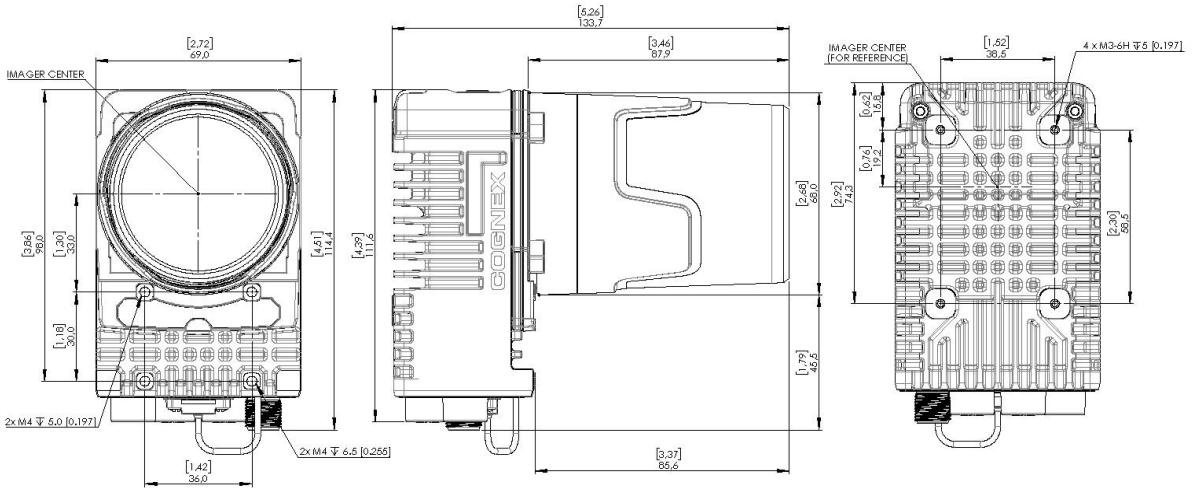

In-Sight 3900 Multi-Torch with Standard Front Cover

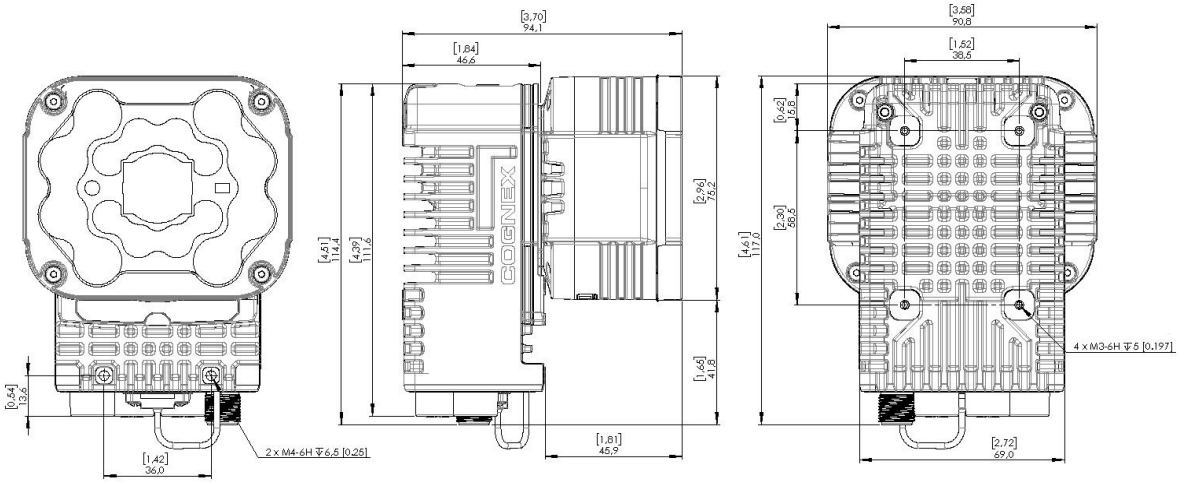

In-Sight 3900 Multi-Torch with Dome Attachment

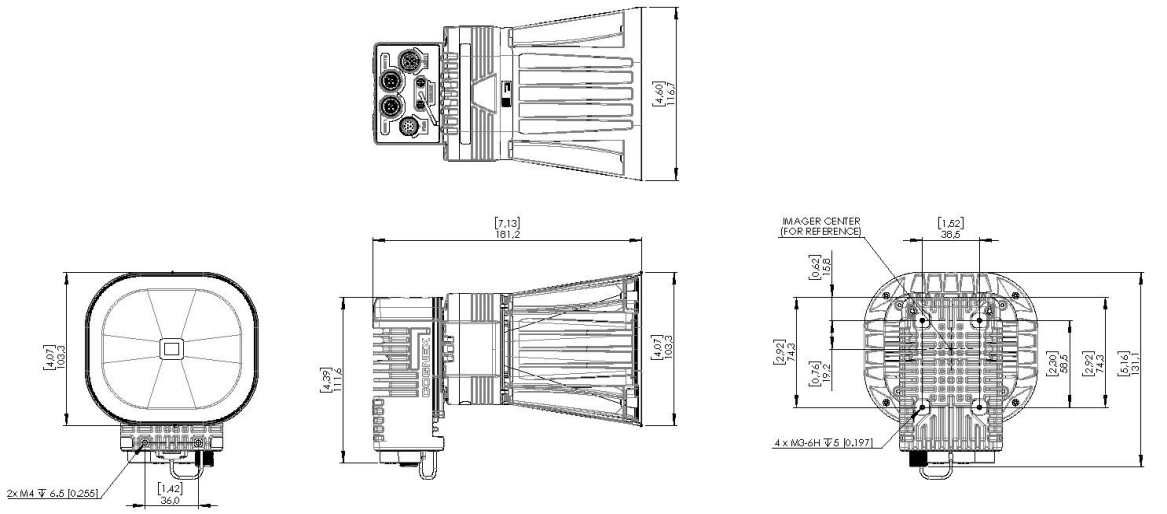

Field of View and Working Distance

This section provides the Field of View (FoV) values for the various In-Sight 3900 vision system configurations.

Note: FOV values are illustrative and represent a typical lens of the given focal length. They do not define HSLL minimum or maximum focus distances.

In-Sight 3901 FoV Values (1.6 MP)

This section describes the Field of View (FoV) of the vision system at different focal lengths, with the Z dimension measured from the C-mount flange.

16 mm Focal Length:

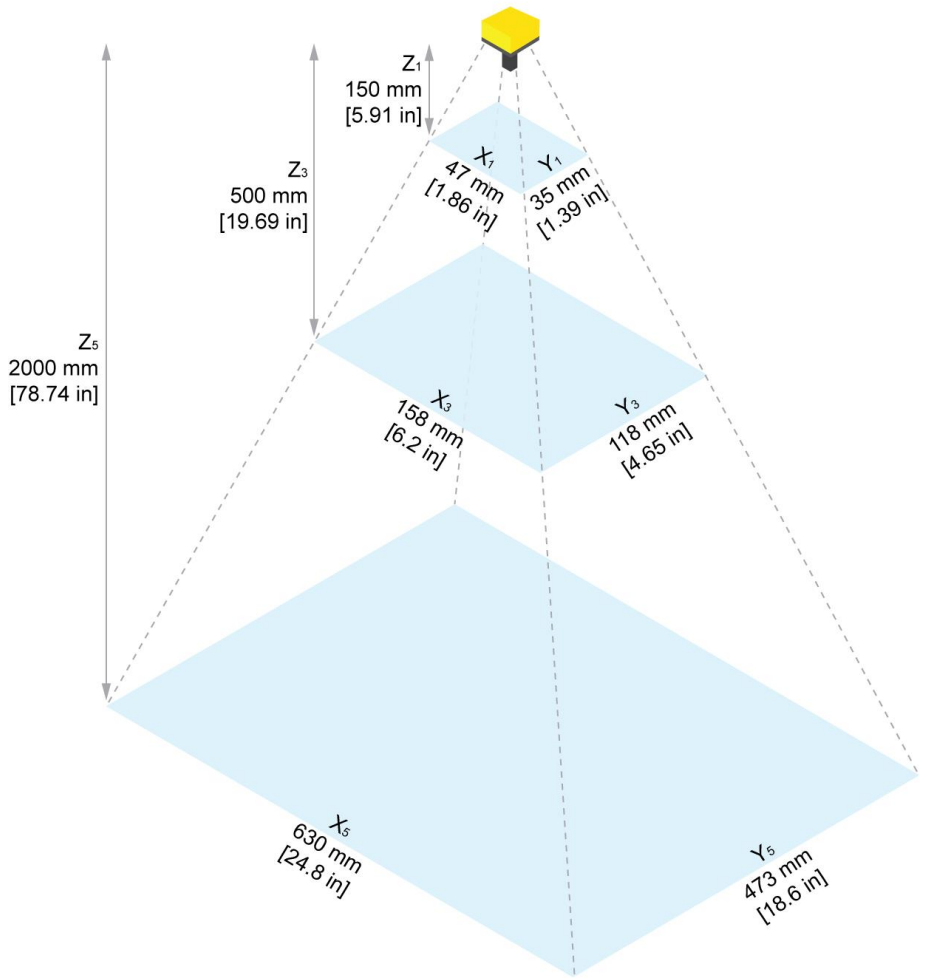

Working Distance	Horizontal Values	Vertical Values	Diagonal Values
150 mm [5.91 in]	47 mm [1.86 in]	35 mm [1.39 in]	59 mm [2.33 in]
200 mm [7.87 in]	63 mm [2.48 in]	47 mm [1.86 in]	79 mm [3.1 in]
500 mm [19.69 in]	158 mm [6.2 in]	118 mm [4.65 in]	197 mm [7.75 in]
1000 mm [39.37 in]	315 mm [12.4 in]	236 mm [9.3 in]	394 mm [15.5 in]
2000 mm [78.74 in]	630 mm [24.8 in]	473 mm [18.6 in]	788 mm [31 in]

24 mm Focal Length:

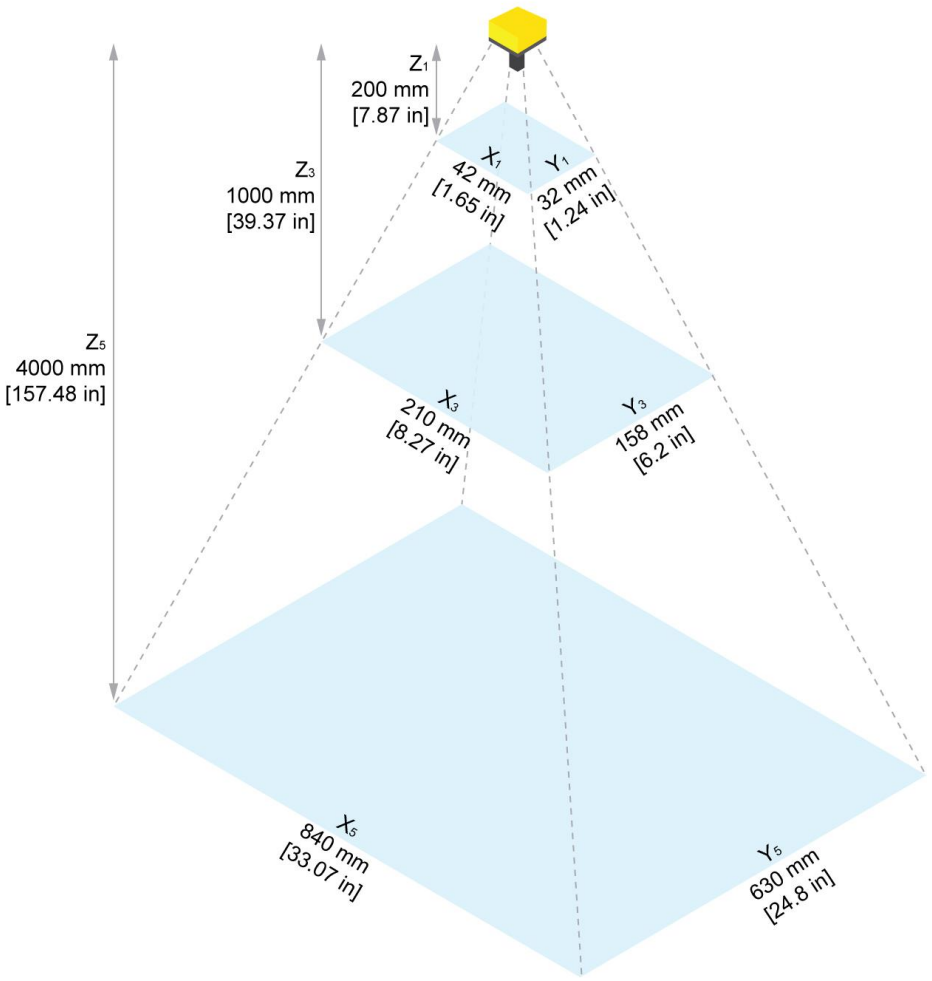

Working Distance	Horizontal Values	Vertical Values	Diagonal Values
200 mm [7.87 in]	42 mm [1.65 in]	32 mm [1.24 in]	53 mm [2.07 in]
500 mm [19.69 in]	105 mm [4.13 in]	79 mm [3.1 in]	131 mm [5.17 in]
1000 mm [39.37 in]	210 mm [8.27 in]	158 mm [6.2 in]	263 mm [10.33 in]
2000 mm [78.74 in]	420 mm [16.54 in]	315 mm [12.4 in]	525 mm [20.67 in]
4000 mm [157.48 in]	840 mm [33.07 in]	630 mm [24.8 in]	1050 mm [41.34 in]

In-Sight 3905 FoV Values with 3 MP Mode

This section describes the Field of View (FoV) of the vision system at different focal lengths, with the Z dimension measured from the C-mount flange.

16 mm Focal Length:

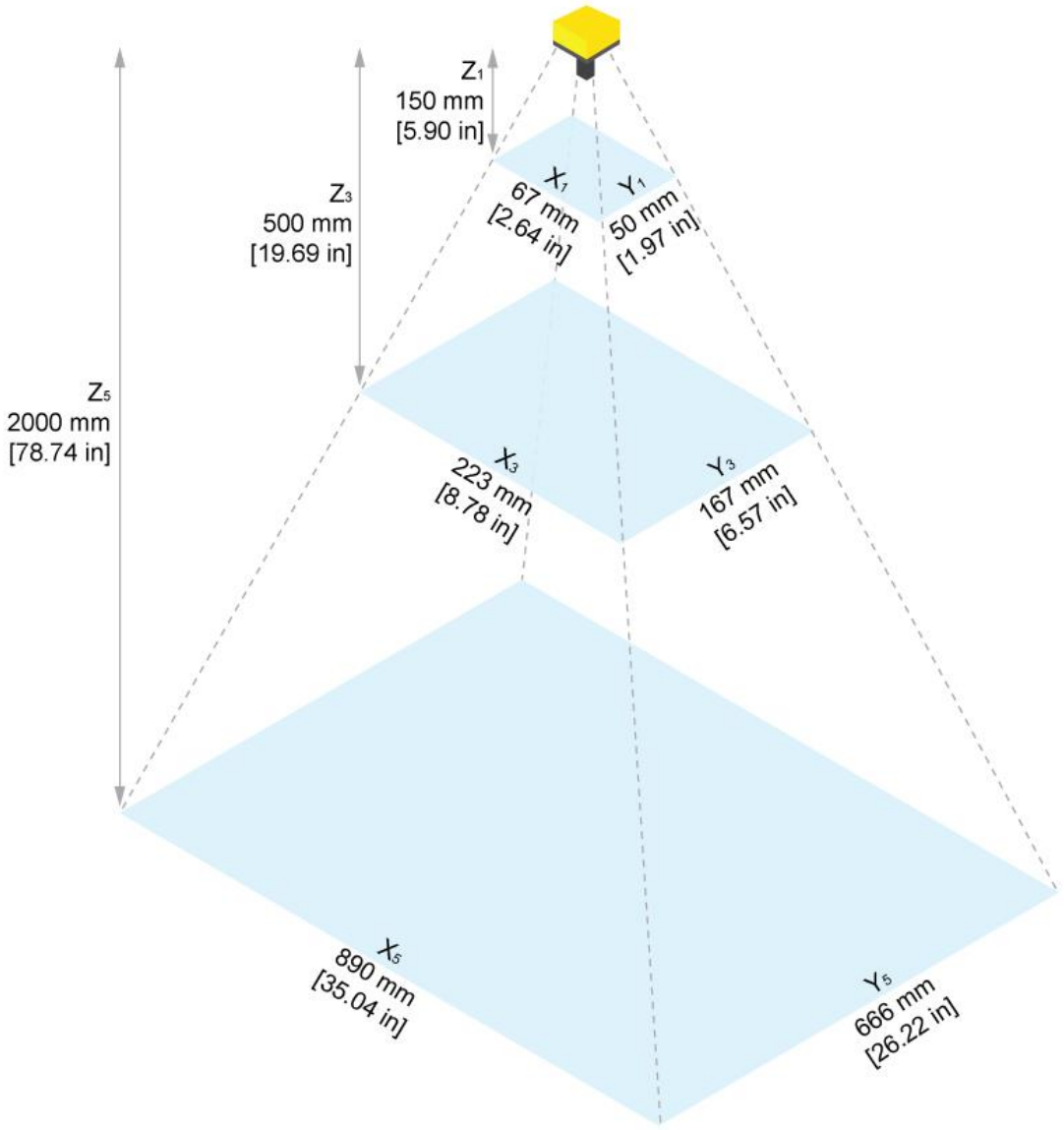

Working Distance	Horizontal Values	Vertical Values	Diagonal Values
150 mm [5.90 in]	67 mm [2.64 in]	50 mm [1.97 in]	83 mm [3.27 in]
200 mm [7.87 in]	89 mm [3.50 in]	67 mm [2.64 in]	111 mm [4.37 in]
500 mm [19.69 in]	223 mm [8.78 in]	167 mm [6.57 in]	278 mm [10.94 in]
1000 mm [39.37 in]	445 mm [17.52 in]	333 mm [13.11 in]	579 mm [22.80 in]
2000 mm [78.74 in]	890 mm [35.04 in]	666 mm [26.22 in]	1112 mm [43.78 in]

24 mm Focal Length:

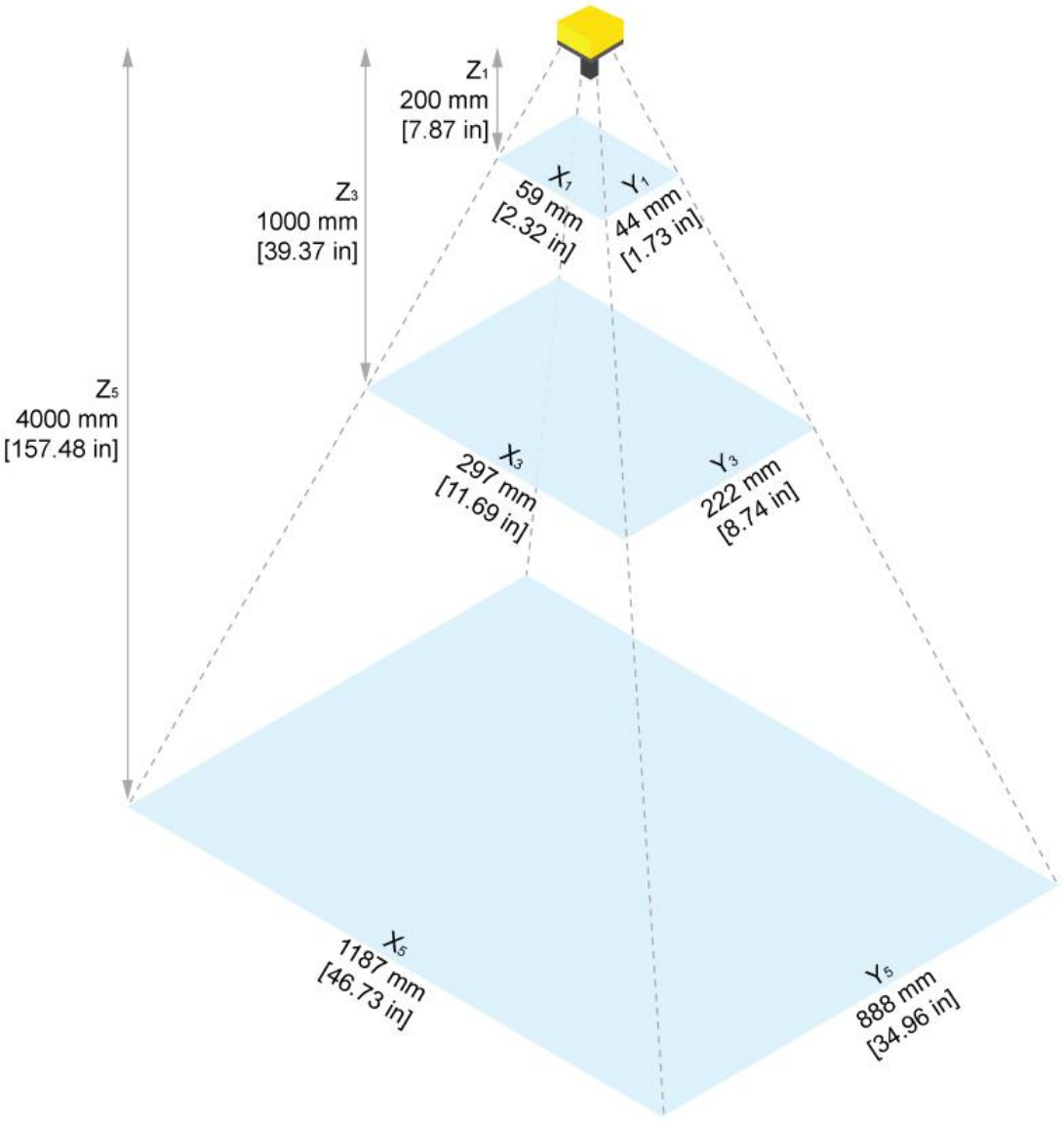

Working Distance	Horizontal Values	Vertical Values	Diagonal Values
200 mm [7.87 in]	59 mm [2.32 in]	44 mm [1.73 in]	74 mm [2.91 in]
500 mm [19.69 in]	148 mm [5.83 in]	111 mm [4.37 in]	185 mm [7.28 in]
1000 mm [39.37 in]	297 mm [11.69 in]	222 mm [8.74 in]	371 mm [14.60 in]
2000 mm [78.74 in]	593 mm [23.35 in]	444 mm [17.48 in]	741 mm [29.17 in]
4000 mm [157.48 in]	1187 mm [46.73 in]	888 mm [34.96 in]	1482 mm [58.35 in]

In-Sight 3905 FoV Values (5 MP)

This section describes the Field of View (FoV) of the vision system at different focal lengths, with the Z dimension measured from the C-mount flange.

16 mm Focal Length:

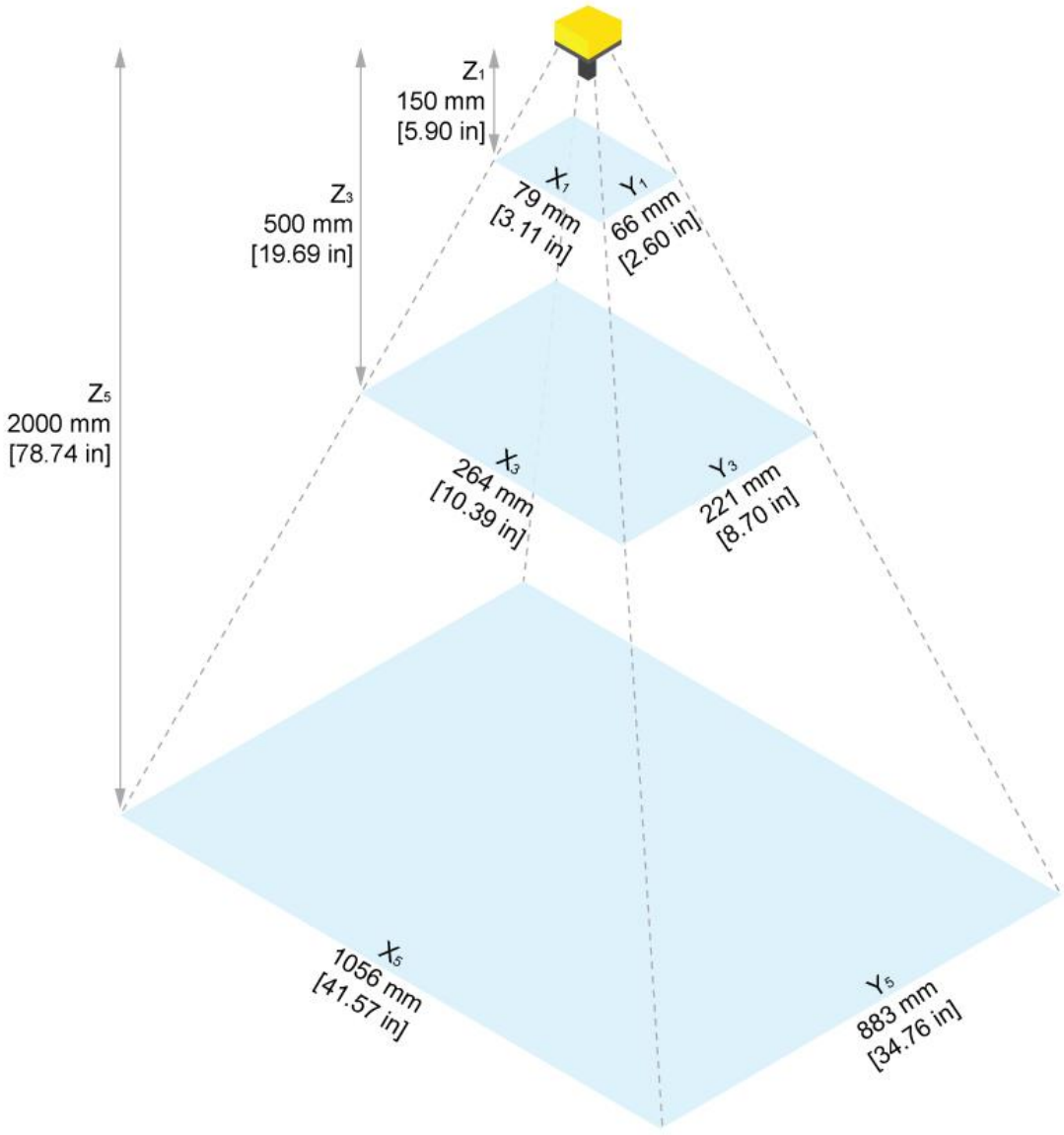

Working Distance	Horizontal Values	Vertical Values	Diagonal Values
150 mm [5.90 in]	79 mm [3.11 in]	66 mm [2.60 in]	103 mm [4.06 in]
200 mm [7.87 in]	106 mm [4.17 in]	88 mm [3.46 in]	138 mm [5.43 in]
500 mm [19.69 in]	264 mm [10.39 in]	221 mm [8.70 in]	344 mm [13.54 in]
1000 mm [39.37 in]	528 mm [20.79 in]	442 mm [17.40 in]	688 mm [27.09 in]
2000 mm [78.74 in]	1056 mm [41.57 in]	883 mm [34.76 in]	1376 mm [54.17 in]

24 mm Focal Length:

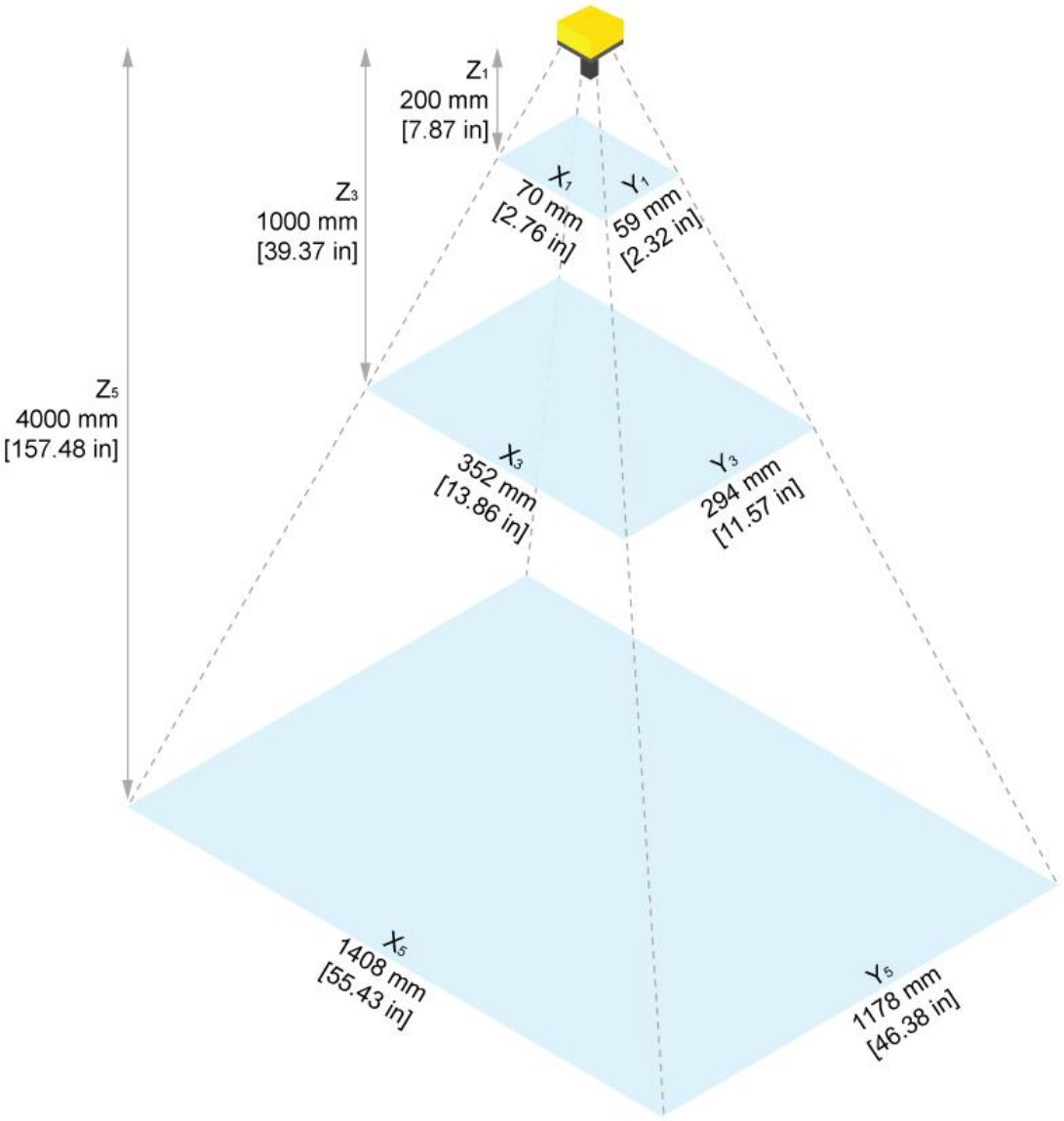

Working Distance	Horizontal Values	Vertical Values	Diagonal Values
200 mm [7.87 in]	70 mm [2.76 in]	59 mm [2.32 in]	92 mm [3.62 in]
500 mm [19.69 in]	176 mm [6.93 in]	147 mm [5.79 in]	229 mm [9.02 in]
1000 mm [39.37 in]	352 mm [13.86 in]	294 mm [11.57 in]	459 mm [18.07 in]
2000 mm [78.74 in]	704 mm [27.72 in]	589 mm [23.19 in]	918 mm [36.14 in]
4000 mm [157.48 in]	1408 mm [55.43 in]	1178 mm [46.38 in]	1835 mm [72.24 in]

In-Sight 3916 FoV Values with 8 MP Mode

This section describes the Field of View (FoV) of the vision system at different focal lengths, with the Z dimension measured from the C-mount flange.

16 mm Focal Length:

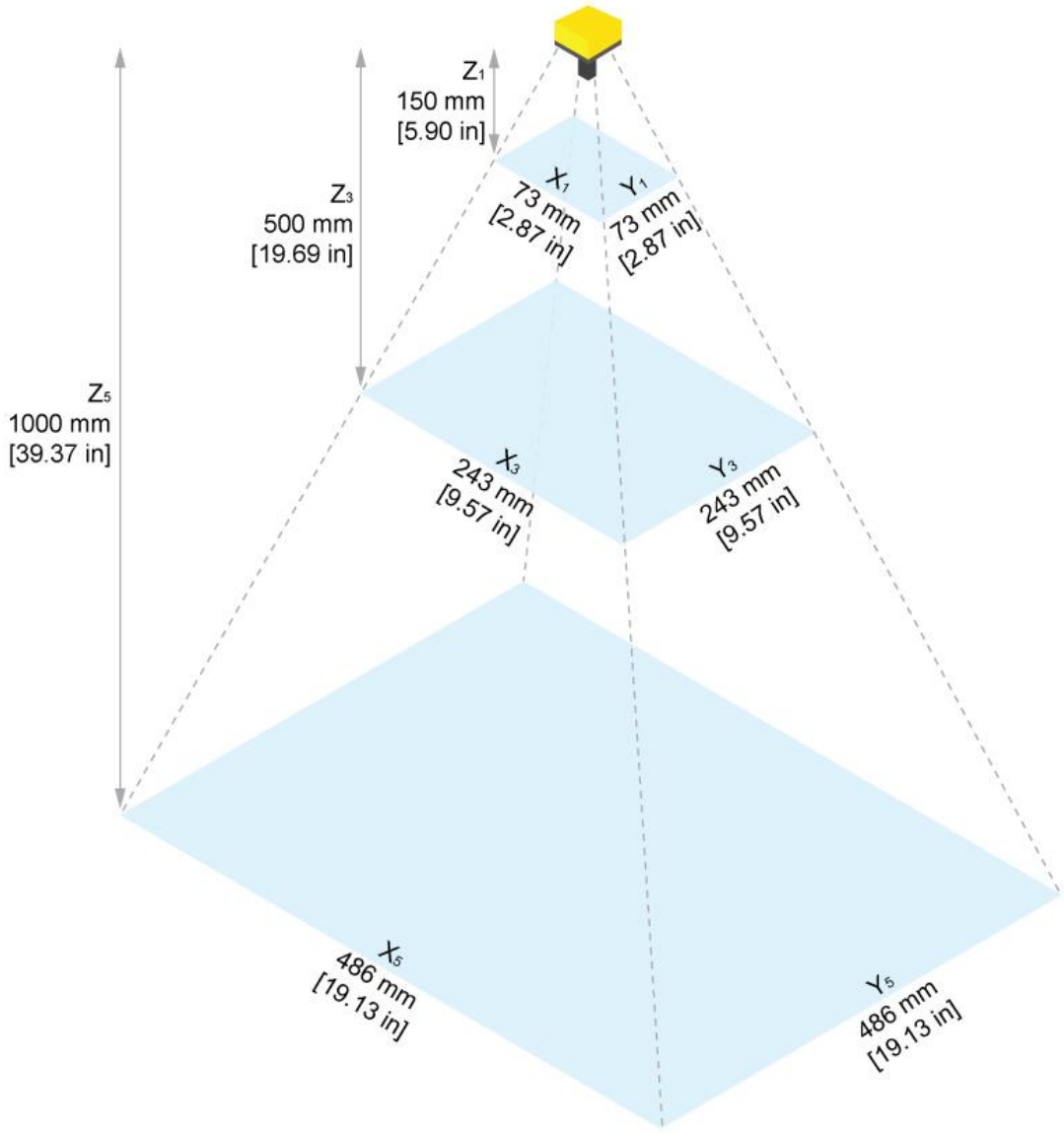

Working Distance	Horizontal Values	Vertical Values	Diagonal Values
150 mm [5.90 in]	73 mm [2.87 in]	73 mm [2.87 in]	103 mm [4.06 in]
250 mm [9.84 in]	122 mm [4.80 in]	122 mm [4.80 in]	172 mm [6.77 in]
500 mm [19.69 in]	243 mm [9.57 in]	243 mm [9.57 in]	344 mm [13.54 in]
750 mm [29.53 in]	365 mm [14.37 in]	365 mm [14.37 in]	516 mm [20.31 in]
1000 mm [78.74 in]	486 mm [41.57 in]	486 mm [41.57 in]	687 mm [27.05 in]

25 mm Focal Length:

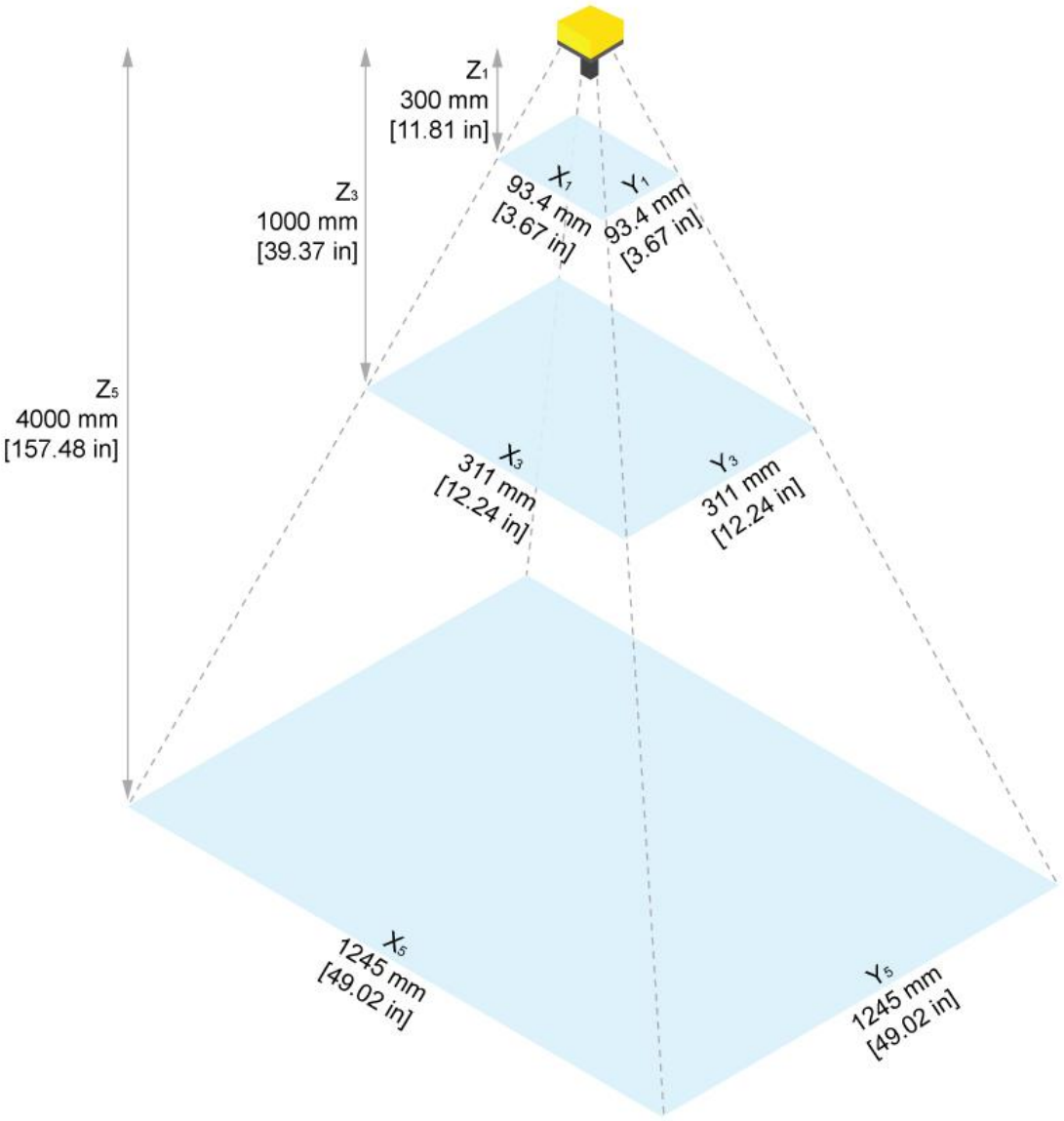

Working Distance	Horizontal Values	Vertical Values	Diagonal Values
300 mm [11.81 in]	93 mm [3.66 in]	93 mm [3.66 in]	132 mm [5.20 in]
500 mm [19.69 in]	155 mm [6.10 in]	155 mm [6.10 in]	220 mm [8.66 in]
1000 mm [39.37 in]	311 mm [12.24 in]	311 mm [12.24 in]	440 mm [17.32 in]
2000 mm [78.74 in]	620 mm [24.40 in]	620 mm [24.40 in]	880 mm [34.65 in]
4000 mm [157.48 in]	1240 mm [48.80 in]	1240 mm [48.80 in]	1760 mm [69.29 in]

35 mm Focal Length:

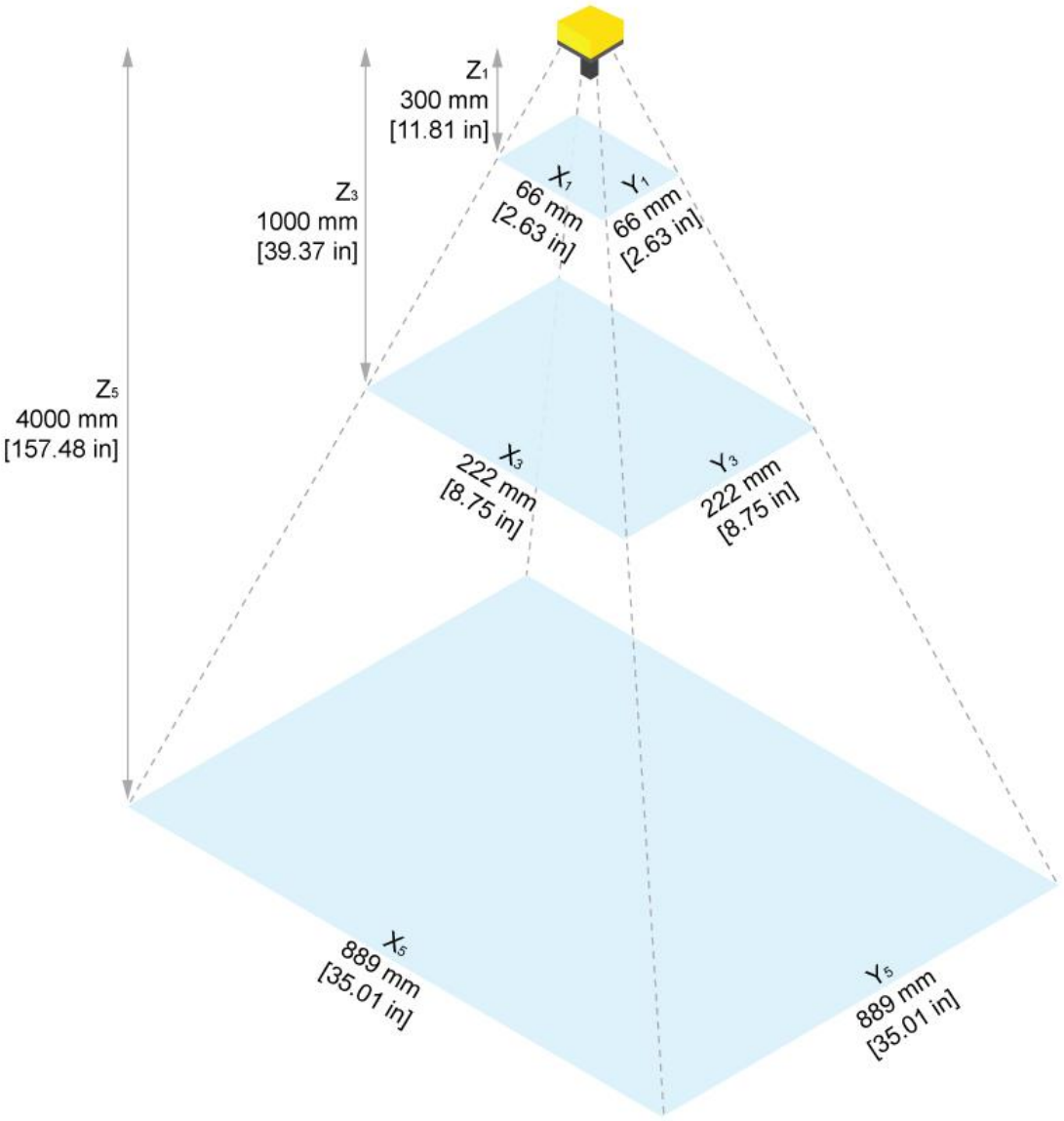

Working Distance	Horizontal Values in mm	Vertical Values in mm	Diagonal Values in mm
300 mm [11.81 in]	66.7 mm [2.63 in]	66.7 mm [2.63 in]	94.3 mm [3.72 in]
500 mm [19.69 in]	111 mm [4.37 in]	111 mm [4.37 in]	157 mm [6.18 in]
1000 mm [39.37 in]	222 mm [8.74 in]	222 mm [8.74 in]	315 mm [12.40 in]
2000 mm [78.74 in]	445 mm [17.52 in]	445 mm [17.52 in]	629 mm [24.76 in]
4000 mm [157.48 in]	889 mm [35.0 in]	889 mm [35.0 in]	1258 mm [49.53 in]

In-Sight 3916 FoV Values with 12 MP Mode

This section describes the Field of View (FoV) of the vision system at different focal lengths, with the Z dimension measured from the C-mount flange.

16 mm Focal Length:

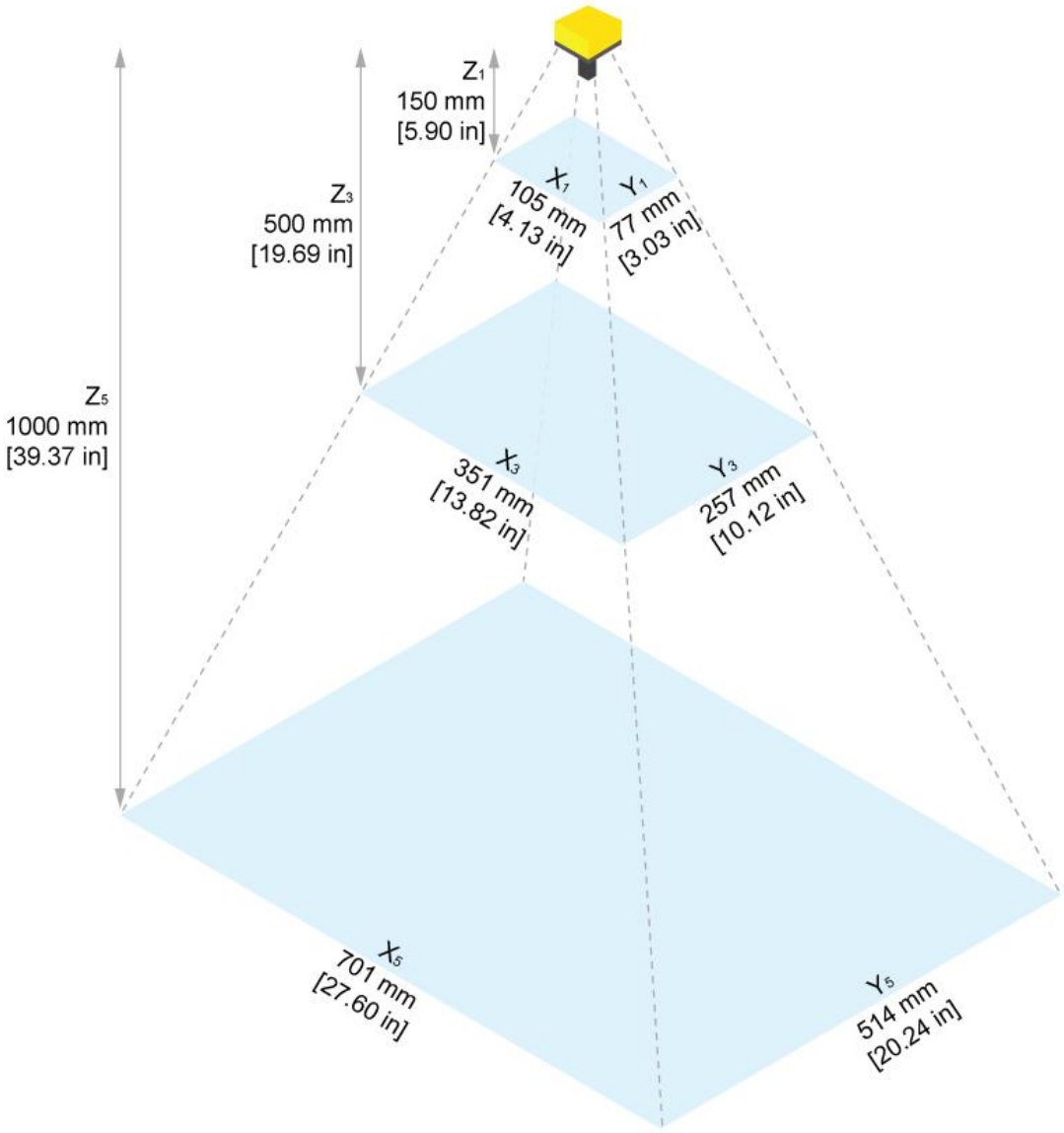

Working Distance	Horizontal Values	Vertical Values	Diagonal Values
150 mm [5.90 in]	105 mm [4.13 in]	77 mm [3.03 in]	130 mm [5.12 in]
250 mm [9.84 in]	175 mm [6.89 in]	128 mm [5.03 in]	217 mm [8.54 in]
500 mm [19.69 in]	351 mm [13.82 in]	257 mm [10.12 in]	435 mm [17.13 in]
750 mm [29.53 in]	526 mm [20.70 in]	386 mm [15.20 in]	652 mm [25.67 in]
1000 mm [78.74 in]	701 mm [27.60 in]	514 mm [20.24 in]	869 mm [34.21 in]

25 mm Focal Length:

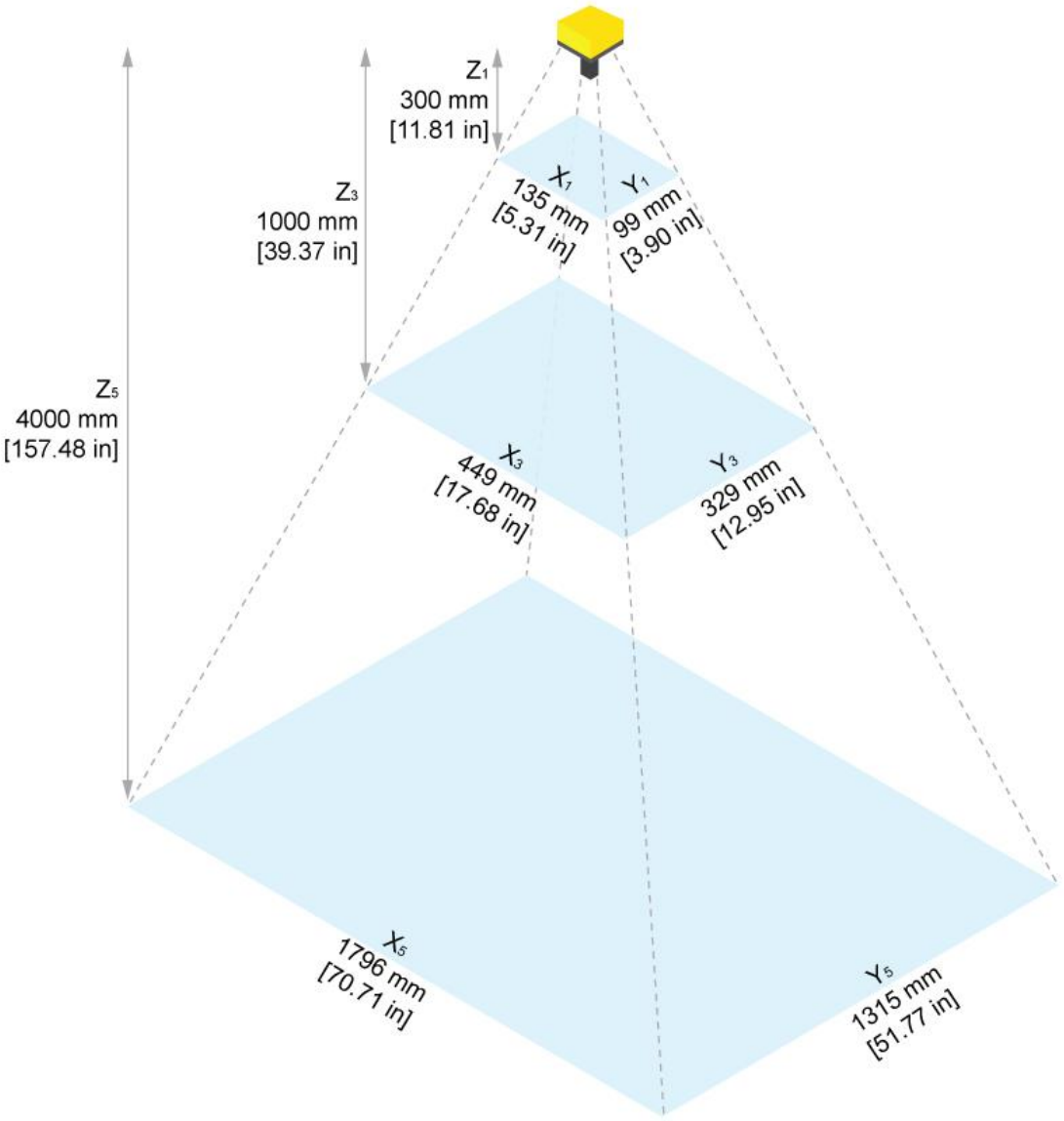

Working Distance	Horizontal Values	Vertical Values	Diagonal Values
300 mm [11.81 in]	135 mm [5.31 in]	99 mm [3.90 in]	167 mm [6.57 in]
500 mm [19.69 in]	225 mm [8.86 in]	165 mm [6.50 in]	279 mm [10.98 in]
1000 mm [39.37 in]	449 mm [17.68 in]	329 mm [12.95 in]	557 mm [21.93 in]
2000 mm [78.74 in]	898 mm [35.35 in]	658 mm [25.91 in]	1113 mm [43.82 in]
4000 mm [157.48 in]	1796 mm [70.71 in]	1315 mm [51.77 in]	2226 mm [87.64 in]

35 mm Focal Length:

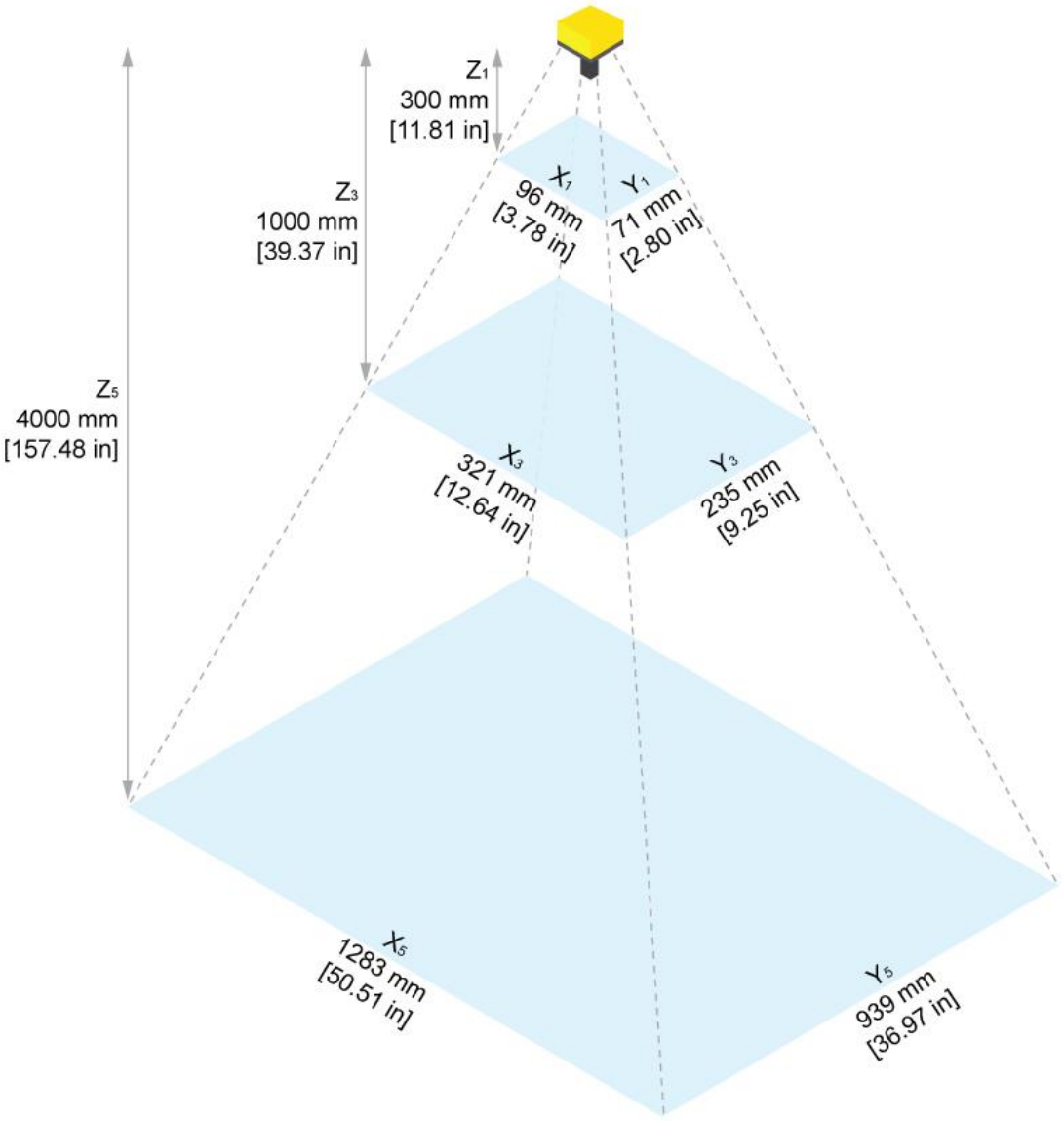

Working Distance	Horizontal Values in mm	Vertical Values in mm	Diagonal Values in mm
300 mm [11.81 in]	96 mm [3.78 in]	71 mm [2.80 in]	119 mm [4.69 in]
500 mm [19.69 in]	160 mm [6.30 in]	118 mm [4.65 in]	199 mm [7.83 in]
1000 mm [39.37 in]	321 mm [12.64 in]	235 mm [9.25 in]	398 mm [15.67 in]
2000 mm [78.74 in]	642 mm [25.28 in]	470 mm [18.50 in]	796 mm [31.34 in]
4000 mm [157.48 in]	1283 mm [50.51 in]	939 mm [36.97 in]	1590 mm [62.60 in]

In-Sight 3916 FoV Values (16 MP)

This section describes the Field of View (FoV) of the vision system at different focal lengths, with the Z dimension measured from the C-mount flange.

16 mm Focal Length:

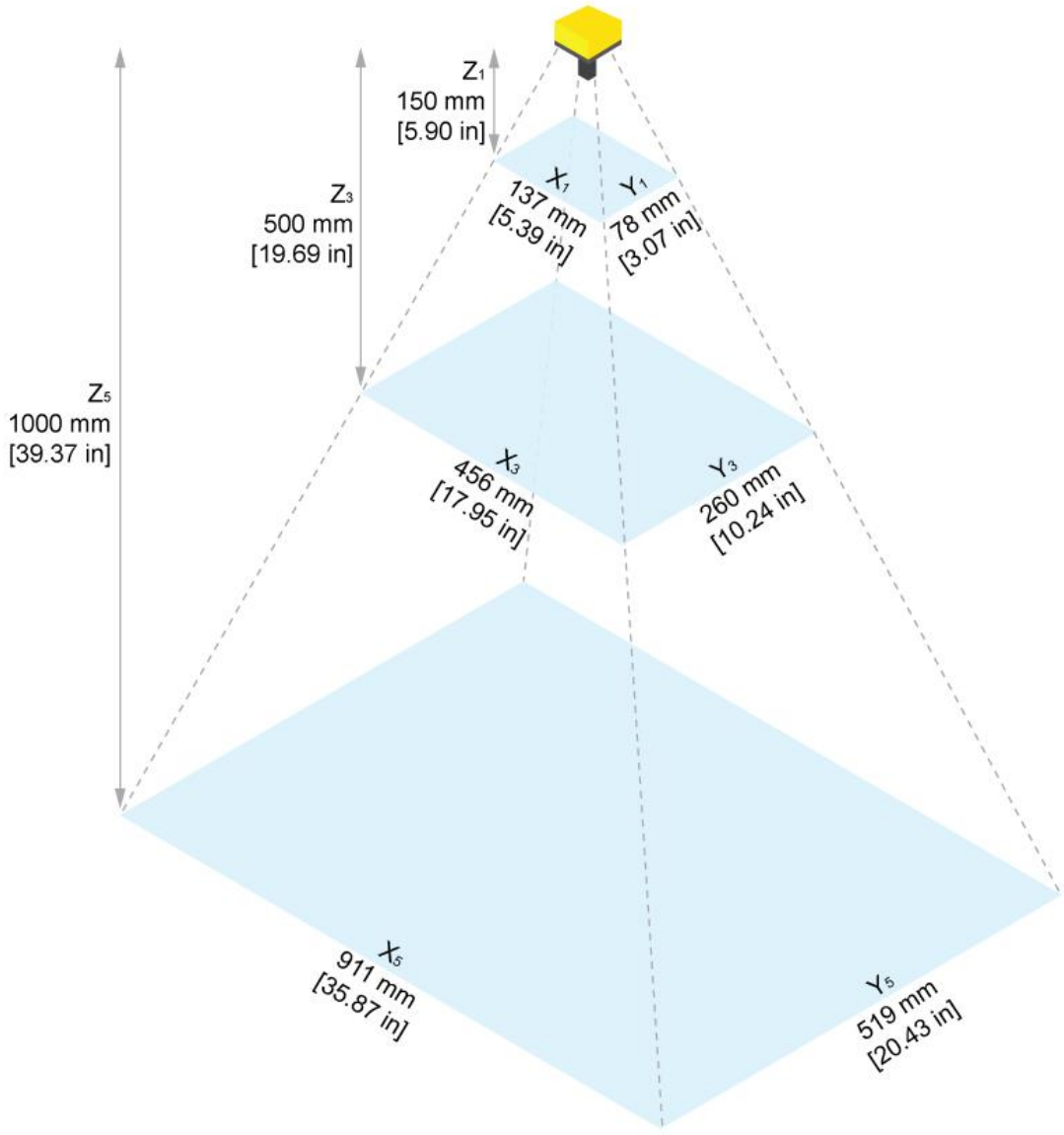

Working Distance	Horizontal Values	Vertical Values	Diagonal Values
150 mm [5.90 in]	137 mm [5.39 in]	78 mm [3.07 in]	158 mm [62.20 in]
250 mm [9.84 in]	228 mm [8.98 in]	130 mm [5.12 in]	262 mm [10.31 in]
500 mm [19.69 in]	456 mm [17.95 in]	260 mm [10.24 in]	525 mm [20.67 in]
750 mm [29.53 in]	684 mm [26.93 in]	390 mm [15.35 in]	787 mm [30.98 in]
1000 mm [78.74 in]	911 mm [35.87 in]	519 mm [20.43 in]	1048 mm [41.26 in]

25 mm Focal Length:

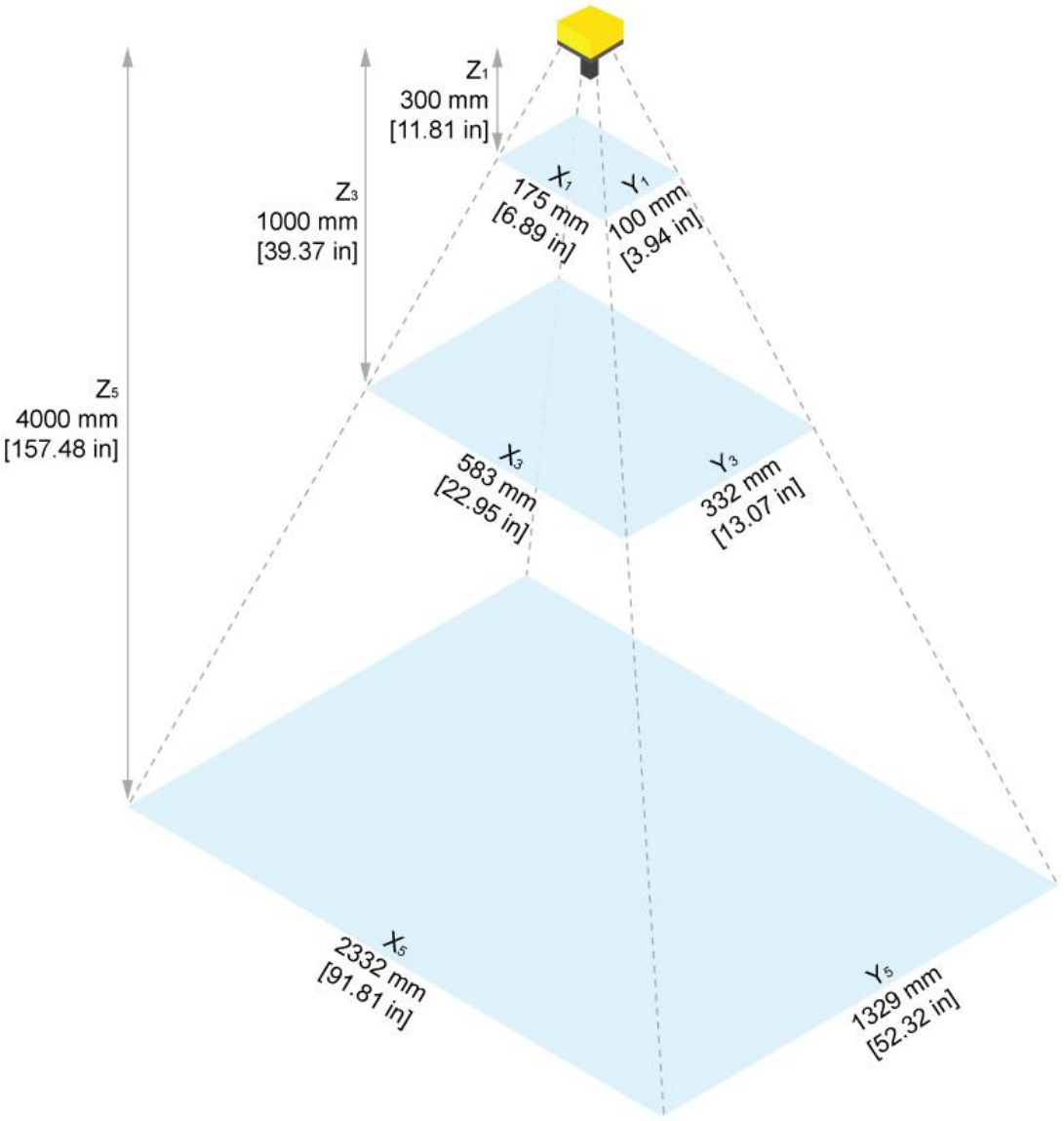

Working Distance	Horizontal Values	Vertical Values	Diagonal Values
300 mm [11.81 in]	175 mm [6.89 in]	100 mm [3.94 in]	202 mm [7.95 in]
500 mm [19.69 in]	292 mm [11.50 in]	167 mm [6.57 in]	336 mm [13.23 in]
1000 mm [39.37 in]	583 mm [22.95 in]	332 mm [13.07 in]	671 mm [26.42 in]
2000 mm [78.74 in]	1166 mm [45.91 in]	664 mm [26.14 in]	1342 mm [52.83 in]
4000 mm [157.48 in]	2332 mm [91.81 in]	1329 mm [52.32 in]	2684 mm [105.67 in]

35 mm Focal Length:

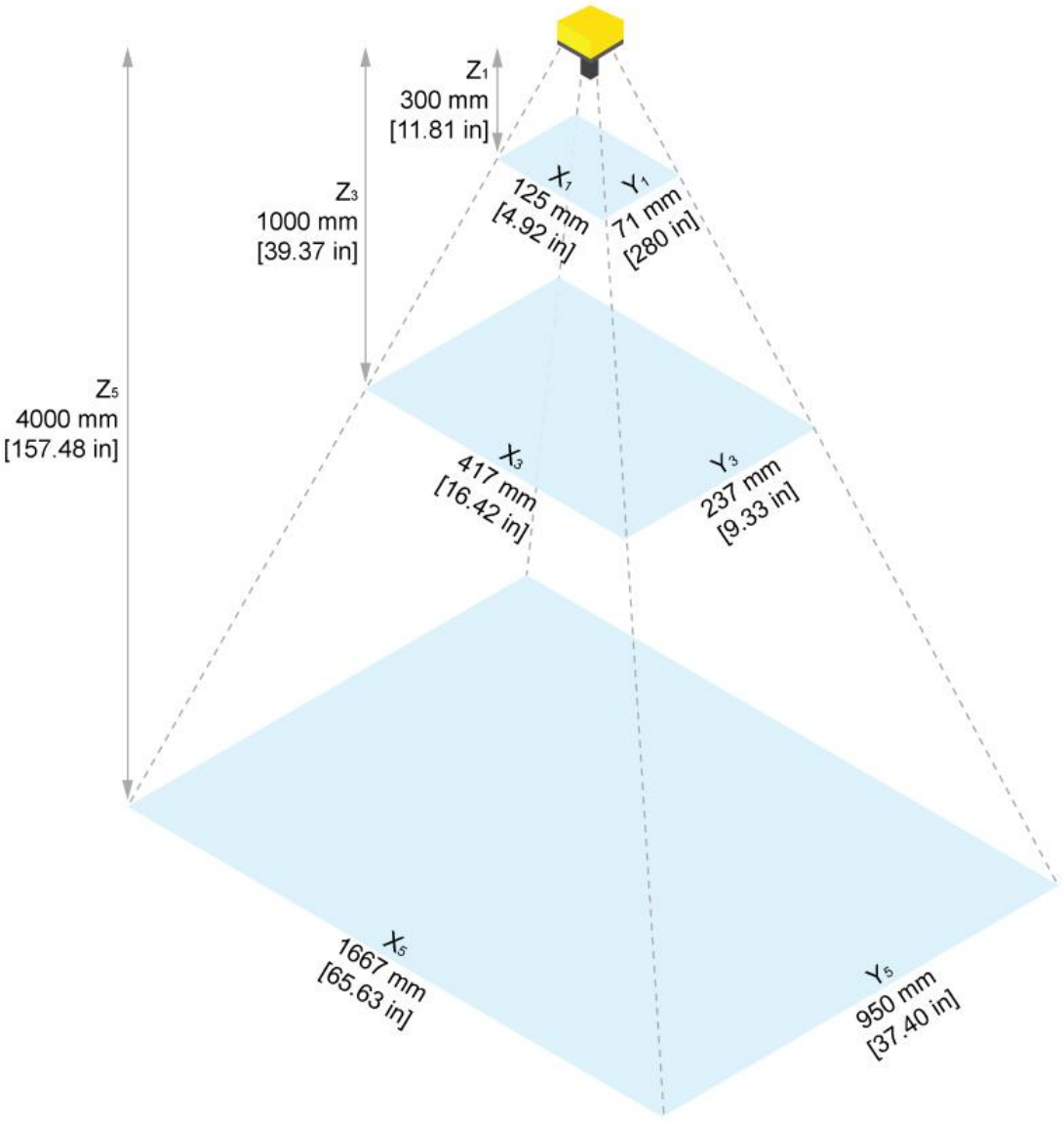

Working Distance	Horizontal Values in mm	Vertical Values in mm	Diagonal Values in mm
300 mm [11.81 in]	125 mm [4.92 in]	71 mm [2.80 in]	144 mm [5.67 in]
500 mm [19.69 in]	208 mm [8.19 in]	118 mm [4.65 in]	239 mm [9.41 in]
1000 mm [39.37 in]	417 mm [16.42 in]	237 mm [9.33 in]	480 mm [18.90 in]
2000 mm [78.74 in]	834 mm [32.83 in]	474 mm [18.66 in]	959 mm [37.76 in]
4000 mm [157.48 in]	1667 mm [65.63 in]	950 mm [37.40 in]	1919 mm [75.55 in]

In-Sight 3925 FoV Values (25 MP)

This section describes the Field of View (FoV) of the vision system at different focal lengths, with the Z dimension measured from the C-mount flange.

16 mm Focal Length:

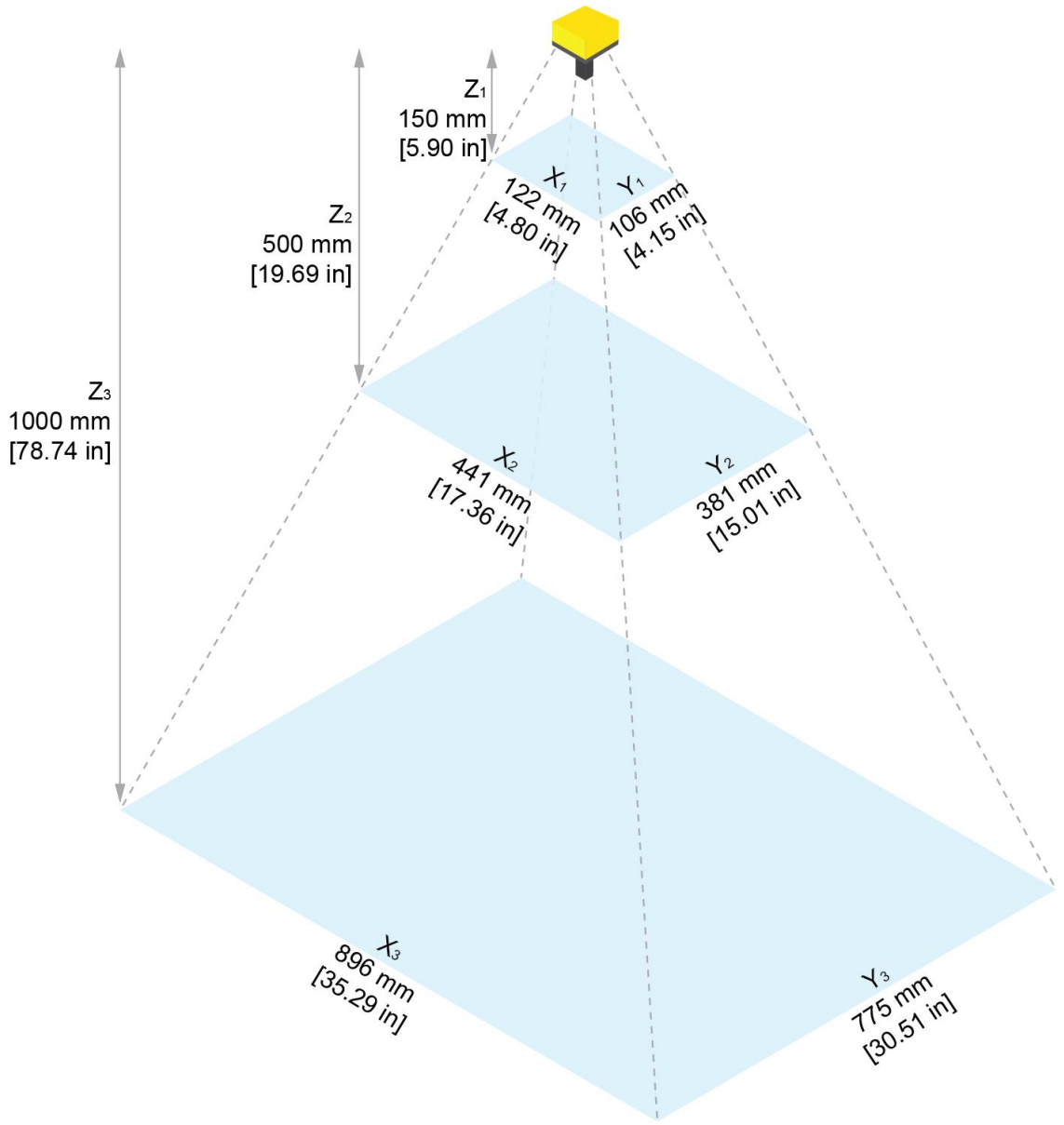

Working Distance	Horizontal Values	Vertical Values	Diagonal Values
150 mm [5.90 in]	122 mm [4.80 in]	106 mm [4.15 in]	161 mm [6.35 in]
250 mm [9.84 in]	213 mm [8.39 in]	184 mm [7.26 in]	282 mm [11.09 in]
500 mm [19.69 in]	441 mm [17.36 in]	381 mm [15.01 in]	583 mm [22.94 in]
750 mm [29.53 in]	669 mm [26.71 in]	578 mm [22.76 in]	884 mm [34.80 in]
1000 mm [78.74 in]	896 mm [35.29 in]	775 mm [30.51 in]	1185 mm [46.65 in]

25 mm Focal Length:

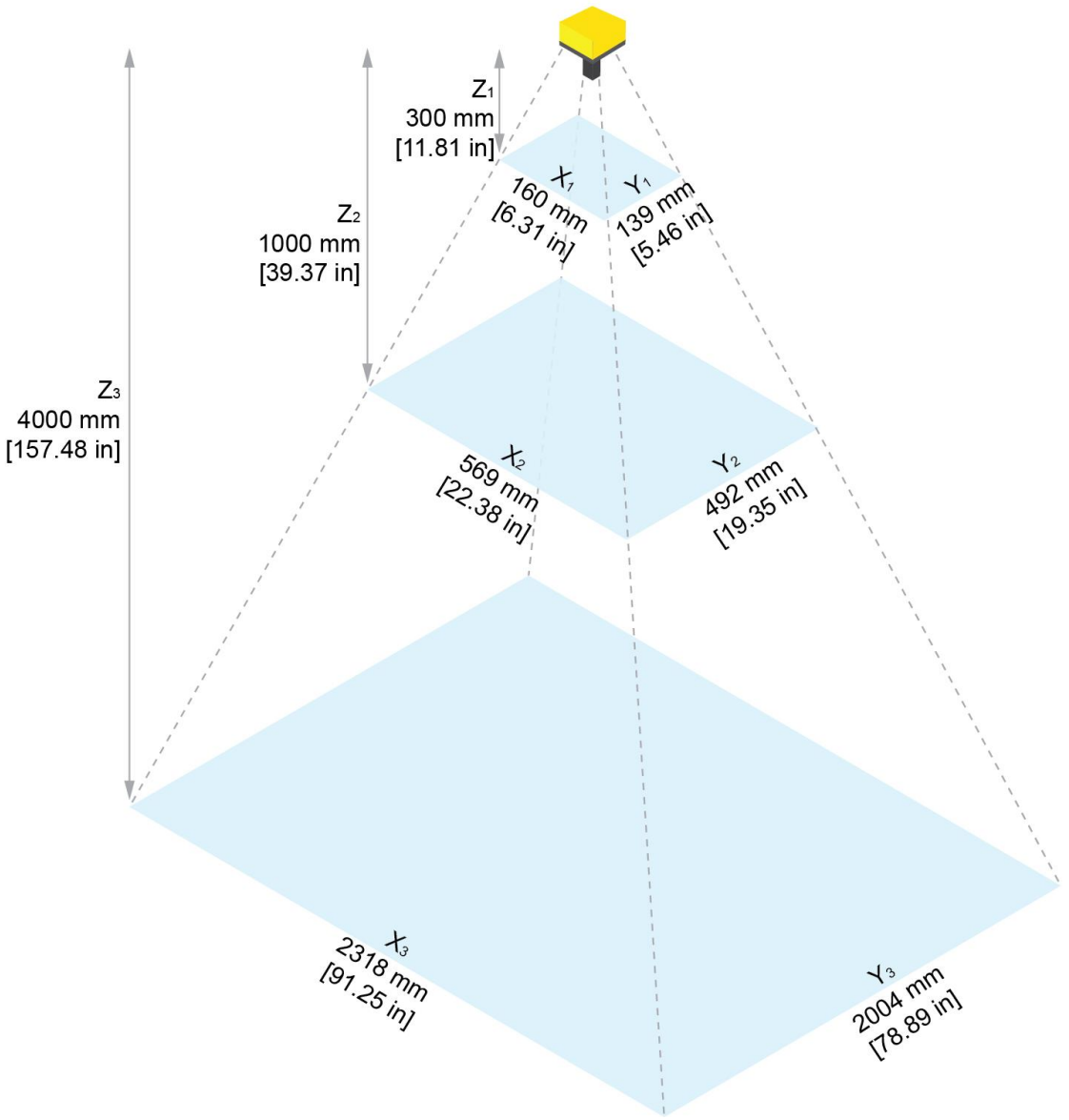

Working Distance	Horizontal Values	Vertical Values	Diagonal Values
300 mm [11.81 in]	160 mm [6.31 in]	139 mm [5.46 in]	212 mm [8.35 in]
500 mm [19.69 in]	277 mm [10.90 in]	239 mm [9.43 in]	366 mm [14.41 in]
1000 mm [39.37 in]	569 mm [22.38 in]	492 mm [19.35 in]	752 mm [29.59 in]
2000 mm [78.74 in]	1152 mm [45.34 in]	996 mm [39.20 in]	1522 mm [59.94 in]
4000 mm [157.48 in]	2318 mm [91.25 in]	2004 mm [78.89 in]	3064 mm [120.63 in]

35 mm Focal Length:

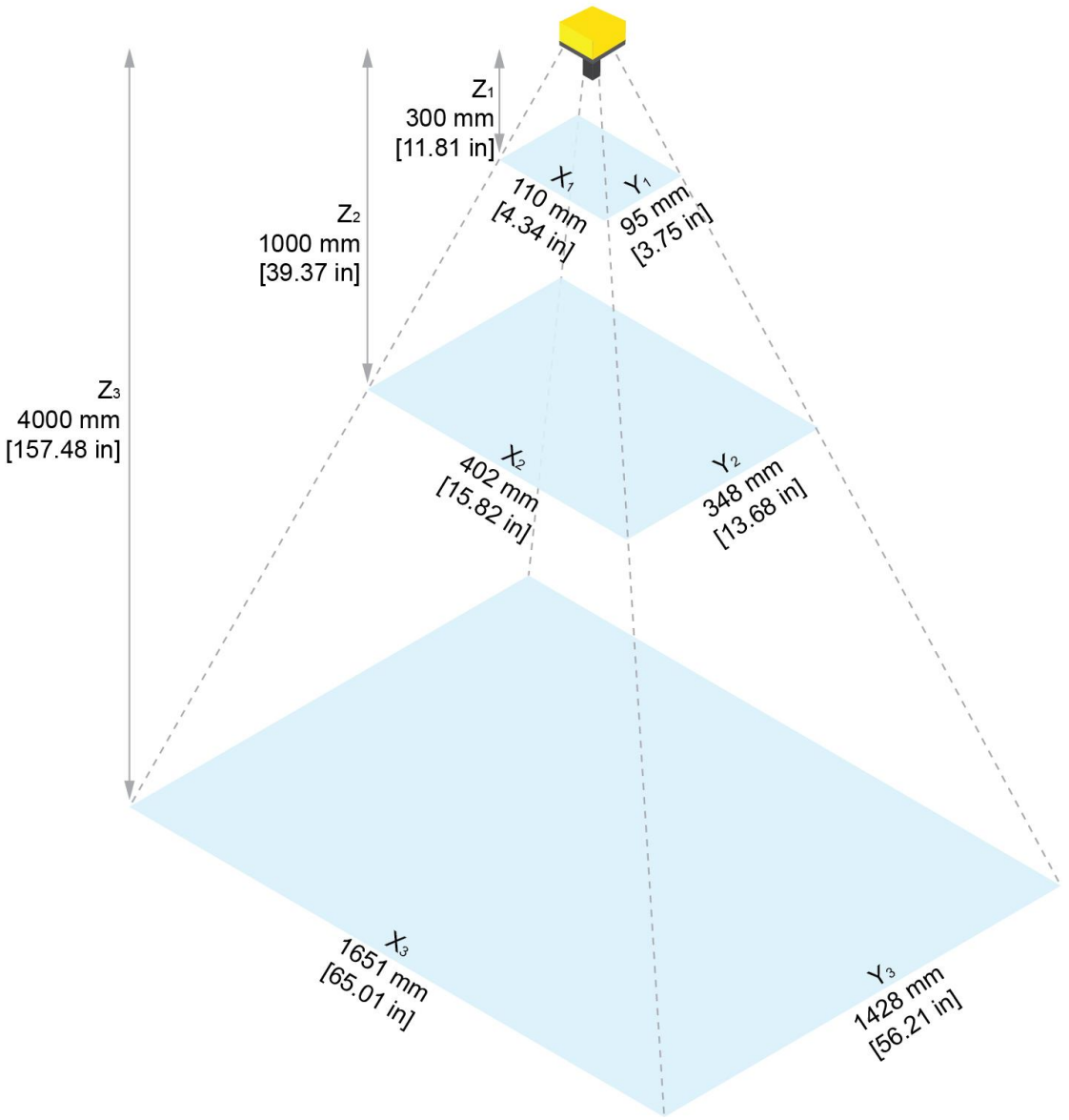

Working Distance	Horizontal Values in mm	Vertical Values in mm	Diagonal Values in mm
300 mm [11.81 in]	110 mm [4.34 in]	95 mm [3.75 in]	146 mm [5.74 in]
500 mm [19.69 in]	194 mm [7.62 in]	167 mm [6.59 in]	256 mm [10.07 in]
1000 mm [39.37 in]	402 mm [15.82 in]	348 mm [13.68 in]	531 mm [20.91 in]
2000 mm [78.74 in]	818 mm [32.21 in]	708 mm [27.85 in]	1082 mm [42.59 in]
4000 mm [157.48 in]	1651 mm [65.01 in]	1428 mm [56.21 in]	2183 mm [85.94 in]

High-Speed Liquid Lens Focus Distances

The following table lists the focus distance ranges for High-Speed Liquid Lens (HSLL) supported by the In-Sight 3900 vision system, measured from the C-mount flange.

Lens model	Minimum focus distance (mm)	Maximum focus distance (mm)
CLN-C08F8FS-HSLL – 8 mm HSLL	100	1000
CLN-C10F5FS-HSLL – 10 mm HSLL	200	1000
CLN-C16F8FS-HSLL – 16 mm HSLL	250	4000
CLN-C24F6FS-HSLL – 24 mm HSLL	250	4000
CLN-C35F8FS-HSLL – 35 mm HSLL	500	4000
CLN-C16F65-HSLL-HR – 16 mm HSLL, high resolution	150	1000
CLN-C25F65-HSLL-HR – 25 mm HSLL, high resolution	300	4000
CLN-C35F06-HSLL-HR – 35 mm HSLL, high resolution	500	4000

Acquisition Trigger Input

The vision system features one acquisition trigger input, which is optically isolated. You can configure the acquisition trigger input to trigger from an NPN (current sinking) or PNP (current sourcing) device.

Specification	Description
Voltage	ON: 15 to 28 V DC (24 DC nominal) OFF: 0 to 5 V DC (11.5 V DC nominal threshold)
Current (Typical)	ON: 2.6 mA to 4.9 mA from 15 to 28 V Input OFF: <830 µA for < 5 V DC Resistance: ~6 kOhms
Delay	24 µs maximum latency between leading edge of trigger and start of acquisition. Input pulse should be a minimum of 1 ms wide.

- To trigger from an NPN type photoelectric sensor or PLC output, connect COMMON IN to +24 VDC and connect IN 0 to the output of the photoelectric sensor. When the output turns ON, it pulls TRIGGER down to 0 VDC, turning the opto-coupler ON.
- To trigger from a PNP photoelectric sensor or PLC output, connect IN 0 to the output of the photoelectric sensor and connect COMMON IN to 0 VDC. When the output turns ON, it pulls TRIGGER up to +24 VDC, turning the opto-coupler ON.

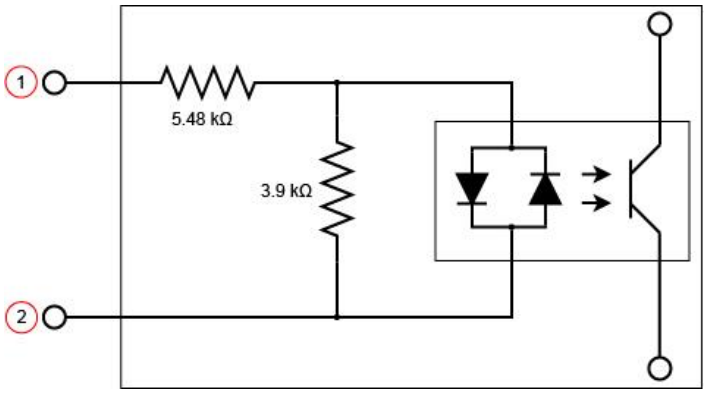

Number	Input
1	IN 0
2	COMMON IN

High-Speed Outputs

Specification	Description
Voltages	V_{MAX}: 26 V DC through external load V_{OL}: ≤ ± 3 V @ 50 mA
Current	I_{MAX}: 50 mA maximum sink or source current
	Each line is protected against over-current, short circuits and transients from switching inductive loads. High current inductive loads require an external protection diode.

Connecting to NPN Lines

To connect the vision system to NPN lines:

1. Connect the external load between the output (NPN OUT HSOUTx) and the positive supply voltage (<26 VDC).
2. Connect COMMON OUT to ground.

The output pulls down to less than 3 V DC when ON, which causes current to flow through the load. When the output is OFF, no current flows through the load.

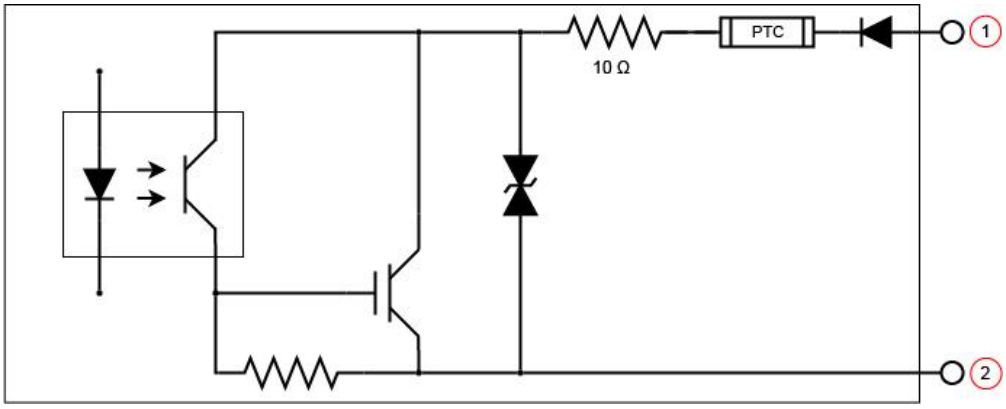

Number	Output
1	NPN OUT
2	COMMON OUT

Connecting to PNP Lines

To connect the vision system to PNP lines:

1. Connect the external load between the output (PNP OUT HSOUTx) and the negative supply voltage (0 VDC).
2. Connect the COMMON OUT to positive DC voltage.

When Common OUT is connected to a 24 V DC power supply, the output pulls up greater than 21 V DC when ON, and current flows through the load. When the output is OFF, no current flows through the load.

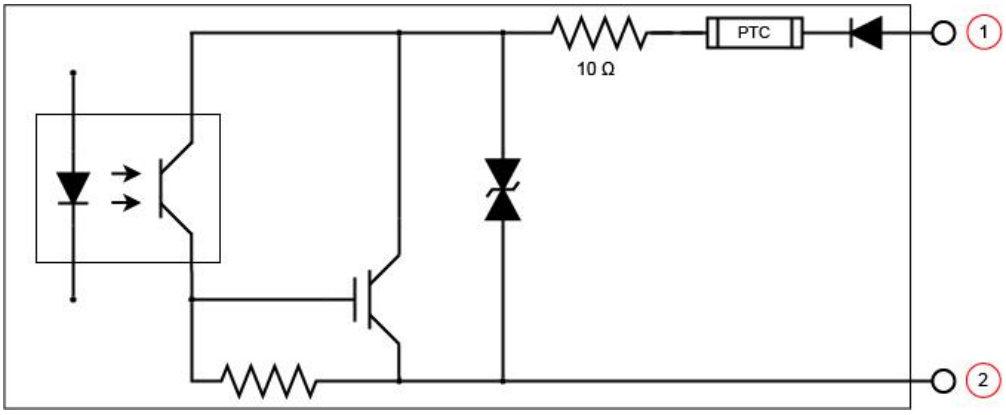

Number	Output
1	COMMON OUT
2	PNP OUT

Cable Specifications

The following sections describe the specifications for the different cable types you can use with the vision system.

Breakout Cable

The Breakout cable provides connections to an external power supply, the acquisition trigger input, general-purpose inputs, high-speed outputs, and RS-232 serial communications. The Breakout cable is not terminated.

The Breakout cable can be connected to devices, such as a trigger sensor or strobe light. The Breakout cable is not terminated.

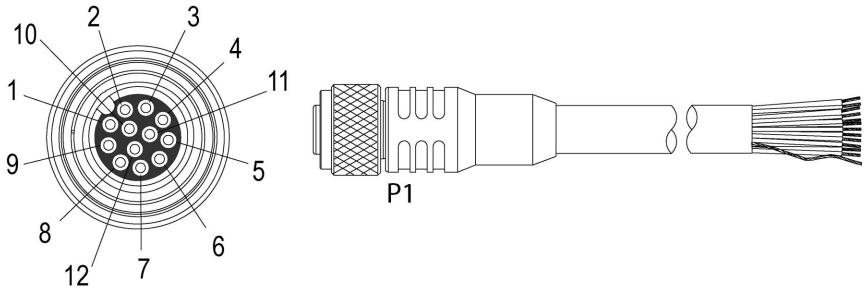

Pin#	Signal Names	Wire Color
1	IN 2 / HSOUT 2	Yellow
2	RS-232 TRANSMIT	White/Yellow
3	RS-232 RECEIVE	Brown
4	IN 3 / HSOUT 3	White/Brown
5	IN 1	Violet
6	COMMON IN	White/Violet
7	+24VDC	Red
8	GND	Black
9	COMMON OUT	Green
10	TRIGGER	Orange
11	HSOUT 0	Blue
12	HSOUT 1	Grey

Note:

- Perform wiring or adjustments to I/O devices when the vision system is not receiving power.
- You can cut exposed wires short or trim wire ends. You also can tie the wires back if you use a tie made of non-conductive material. Keep bare wires separated from the +24 V DC wire.
- When using the 15 meter Breakout cable, full 24 V DC voltage must be maintained at the input leads of the Breakout cable when the vision system is operating.

Ethernet Cable

The Ethernet cable provides Ethernet connectivity to the vision system. The Ethernet cable is used to connect the vision system to other network devices.

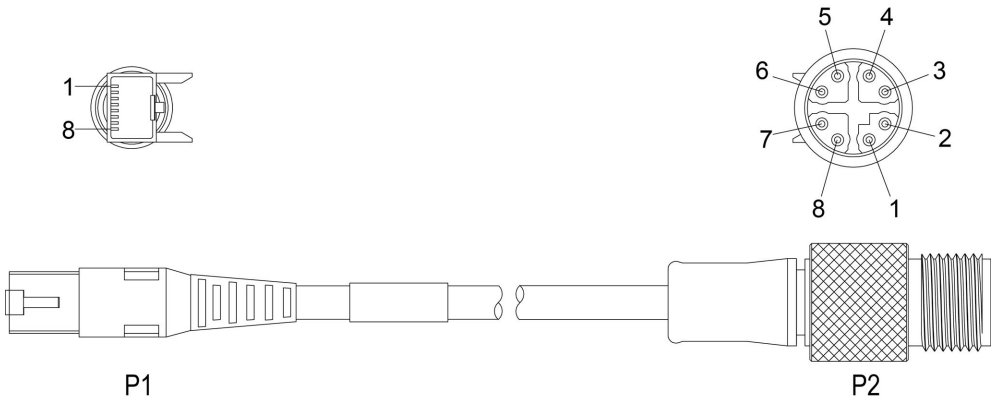

P1 Pin Number	Wire Color	Signal Name	P2 Pin Number
1	White/Orange	TxRx A +	1
2	Orange	TxRx A -	2
3	White/Green	TxRx B +	3
4	Blue	TxRx C +	8
5	White/Blue	TxRx C -	7
6	Green	TxRx B -	4
7	White/Brown	TxRx D +	5
8	Brown	TxRx D -	6

⚠ CAUTION: The Ethernet cable shield has to be grounded at the far end. Whatever this cable is plugged into (typically a switch or router) should have a grounded Ethernet connector. A digital voltmeter has to be used to validate the grounding. If the far end device is not grounded, a ground wire should be added in compliance with local electrical codes.

Note: The wiring for this cable follows standard industrial Ethernet M12 specifications. It differs from the 568B standard.

EtherCAT Adapter Cable

The EtherCAT adapter cable breaks out the EtherCAT input and output ports of the vision system to individual connectors.

- The P1 EtherCAT output is an M12 D-coded female connector that provides access to the EtherCAT output port of the vision system.
- The P2 EtherCAT input is an M12 D-coded female connector that provides access to the EtherCAT input port of the vision system.
- The P3 adapter input is an M12 X-coded male connector that connects to the EtherCAT connector on the vision system.

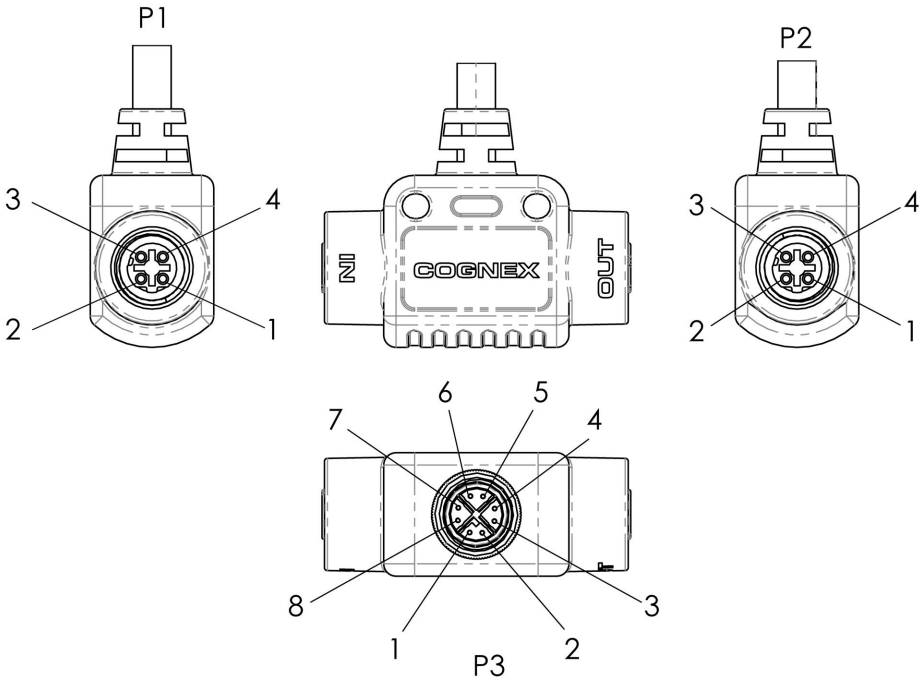

P3 Adapter Input Pin Number	Wire Color	Signal	P1 EtherCAT Output Pin Number
1	White/Orange	RX1+	2
2	Orange	RX1-	4
3	White/Green	TX1+	1
4	Green	TX1-	3
P3 Adapter Input Pin Number	**Wire Color**	**Signal**	**P2 EtherCAT Input Pin Number**
5	Blue	RX2+	1
6	White/Blue	RX2-	3
7	White/Brown	TX2+	4
8	Brown	TX2-	2

External Light Connector

The LIGHT connector of the vision system is used to connect the External Light cable to an external lighting device, providing power and strobe control. You can connect the External Light cable to either a continuous or strobed lighting device.

Before using an external lighting device, you must configure the light settings within In-Sight Vision Suite. For more information, refer to the *In-Sight Spreadsheet Help* documentation.

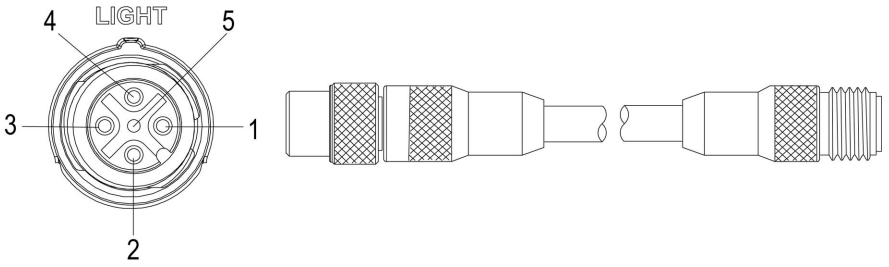

Pin#	Signal Name	Wire Color
1	+24 V DC	Brown
2	Intensity Control	White
3	GND	Blue
4	Strobe	Black
5	Chassis	Not Connected

Note:

- Current load: 1 A maximum, 750 mA average.
- Intensity Control is an analog signal that ranges from 0 to +10 V DC and is configurable within In-Sight Vision Suite. It is a control signal only and must not be used to power an external device. Power must be sourced from +24 V DC and GND. Verify the External Light cable and light support intensity control.
- The Strobe output is active low 0 V DC and active high +12 V DC, with the Polarity configurable within In-Sight Vision Suite. It is a control signal only and cannot be used for power. Power must be sourced from +24 V DC and GND.

CAUTION:
Connecting an analog light while the **Cognex Ecosystem Smart Light (24V Digital)** mode is enabled in In-Sight Vision Suite can cause hardware damage to the vision system or the light. Analog lights support intensity in the range of 0 – 10 V, and smart lights support intensity in the range of 0 – 24 V.

To avoid hardware damage, ensure that the type of light connected to the vision system (analog light or smart light) matches the light setting in the **Light Port Configuration** in In-Sight Vision Suite in the **Camera Configuration** utility.

In-Sight 3900 - Cable Bend Radius

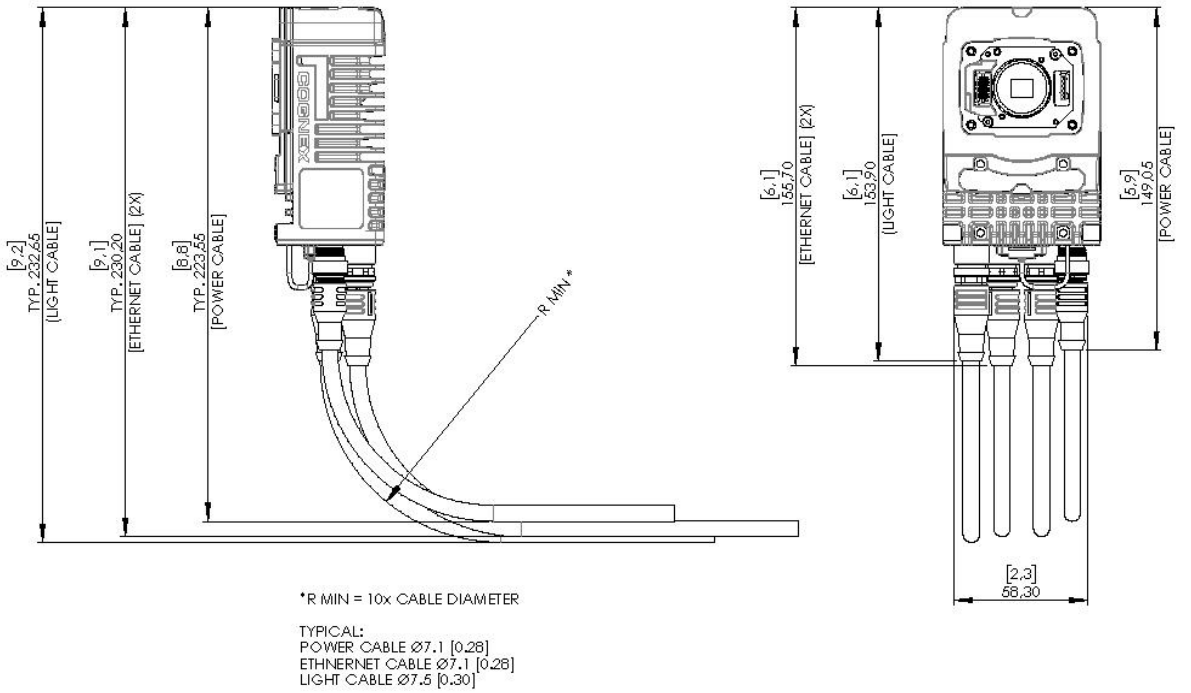

Note: The diagram shows the bend radius of a standard Ethernet cable (CCB-84901-2001-xx). The bend radius of the high-flex Ethernet cable (CCB-84901-2RBT-xx) is 50.8 mm.

Cleaning and Maintenance

Clean the Housing

To clean the outside of the vision system housing, use a small amount of mild detergent cleaner or isopropyl alcohol on a cleaning cloth. Do not pour the cleaner on the vision system housing.

⚠ CAUTION: Do not attempt to clean any In-Sight product with harsh or corrosive solvents, including lye, methyl ethyl ketone (MEK) or gasoline.

Clean the Vision System Image Sensor Window

To remove dust from the outside of the image sensor window, use a pressurized air duster. The air must be free of oil, moisture or other contaminants that could remain on the glass and possibly degrade the image. Do not touch the glass window. If oil or smudges remain, use a cotton bud and alcohol (ethyl, methyl, or isopropyl) to clean the window. Do not pour the alcohol on the window.

Clean the Vision System Lens Cover

To remove dust from the lens cover, use a pressurized air duster. The air must be free of oil, moisture or other contaminants that could remain on the lens cover. To clean the plastic window of the lens cover, use a small amount of isopropyl alcohol on a cleaning cloth. Do not scratch the plastic window. Do not pour the alcohol on the plastic window.

Regulations and Conformity

Note: For the most current CE and UKCA declaration and regulatory conformity information, see the Cognex support site: cognex.com/support.

In-Sight 3900 vision systems have the Regulatory Model number 50160 and meet or exceed the requirements of all applicable standards organizations for safe operation. However, as with any electrical equipment, the best way to ensure safe operation is to operate them according to the agency guidelines that follow. Please read these guidelines carefully before using your device.

Safety and Regulatory	
Manufacturer	Cognex Corporation One Vision Drive Natick, MA 01760 USA
CE	In-Sight 3900 1.6 MP, 5 MP, 16 MP, 25 MP: Regulatory Model 50160 This is a class A product. In a domestic environment this product may cause radio interference in which case the user may be required to take immediate measures. This equipment complies with the essential requirements of the EU Directive 2014/30/EU. Declarations are available from your local representative.
EU RoHS	Compliant to the most recent applicable directive.
FCC	FCC Part 15, Class A This equipment has been tested and found to comply with the limits for a Class A digital device, pursuant to part 15 of the FCC Rules. These limits are designed to provide reasonable protection against harmful interference when the equipment is operated in a commercial environment. This equipment generates, uses, and can radiate radio frequency energy and, if not installed and used in accordance with the instruction manual, may cause harmful interference to radio communications. Operation of this equipment in a residential area is likely to cause harmful interference in which case the user will be required to correct the interference at his own expense.
Korea KC	This device is certified for office use only and if used at home, there can be frequency interference problems. A급 기기(업무용 방송통신기자재): 이 기기는 업무용(A급) 전자파적합기기로서 판 매자 또는 사용자는 이 점을 주의하시기 바라 며, 가정외의 지역에서 사용하는 것을 목적으 로 합니다. In-Sight 3900 1.6 MP, 5 MP, 16 MP, 25 MP: Regulatory Model 50160
TÜV	In-Sight 3900 1.6 MP, 5 MP, 16 MP, 25 MP: Regulatory Model 50160
	NRTL: TÜV SÜD SCC/NRTL OSHA Scheme for UL/CAN 61010-1.
	CB report available upon request. TÜV SÜD, IEC/EN 61010-1.
UKCA	In-Sight 3900 1.6 MP, 5 MP, 16 MP, 25 MP: Regulatory Model 50160 This is a class A product. In a domestic environment this product may cause radio interference in which case the user may be required to take immediate measures. This equipment complies with the essential requirements of the Electromagnetic Compatibility Regulations 2016. Declarations are available from your local representative.

For European Community Users

Cognex complies with Directive 2012/19/EU OF THE EUROPEAN PARLIAMENT AND OF THE COUNCIL of 4 July 2012 on waste electrical and electronic equipment (WEEE).

This product has required the extraction and use of natural resources for its production. It may contain hazardous substances that could impact health and the environment, if not properly disposed.

In order to avoid the dissemination of those substances in our environment and to diminish the pressure on the natural resources, we encourage you to use the appropriate take-back systems for product disposal. Those systems will reuse or recycle most of the materials of the product you are disposing in a sound way.


The crossed out wheeled bin symbol informs you that the product should not be disposed of along with municipal waste and invites you to use the appropriate separate take-back systems for product disposal.

If you need more information on the collection, reuse, and recycling systems, please contact your local or regional waste administration.

You may also contact your supplier for more information on the environmental performance of this product.

中国 RoHS 合规声明 / China RoHS Compliance Declaration

根据《电器电子产品有害物质限制使用管理办法》(GB 26572-2025) 及《电器电子产品有害物质限制使用标识要求》(SJ/T 11364-2024) , 本公司对所提供产品的有害物质含量进行如下声明:

In accordance with the "Administrative Measures on the Restriction of Hazardous Substances in Electrical and Electronic Products" (GB 26572-2025) and "Marking for the Restriction of Hazardous Substances in Electrical and Electronic Products" (SJ/T 11364-2024), our company hereby declares the hazardous substance content in the provided products as follows:



部件名称 Part Name	铅 (Pb)	汞 (Hg)	镉 (Cd)	六价铬 (Cr^{6+})	多溴联苯 (PBB)	多溴二苯醚 (PBDE)	邻苯二甲酸二(2-乙基己)酯 (DEHP)	邻苯二甲酸丁苄酯 (BBP)	邻苯二甲酸二丁酯 (DBP)	邻苯二甲酸二异丁酯 (DIBP)
Regulatory Model 50160	X	O	O	O	O	O	O	O	O	O

说明 / Note:
“O”表示该有害物质在所有均质材料中的含量均低于 GB 26572-2025 的限量要求。

"O" indicates that the hazardous substance content in all homogeneous materials is below the limit requirement of GB 26572-2025.

“X”表示该有害物质在至少一个均质材料中的含量高于 GB 26572-2025 的限量要求。

"X" indicates that the hazardous substance content in at least one homogeneous material exceeds the limit requirement of GB 26572-2025.

Copyright © 2026
Cognex Corporation. All Rights Reserved.