COGNEX

Advanced machine vision made easy

In-Sight® 3800 Series

Reference Manual



2026 September 24

Legal Notices

The software described in this documentation is provided "as is" and "as available," without warranty of any kind, express or implied, including but not limited to the warranties of merchantability, fitness for a particular purpose, and non-infringement. In no event shall Cognex Corporation and its global affiliates (collectively, “Cognex”) be liable for any claims, damages, or other liability arising from, out of, or in connection with the software or your use of the software.

Your use of this software is governed by the full terms and conditions of the Cognex Software License Agreement. For complete licensing details and legal terms, please visit https://www.cognex.com/terms-and-conditions.

The information in this document is subject to change without notice and should not be construed as a commitment by Cognex. Cognex is not responsible for any errors that may be present in either this document or the associated software.

Companies, names, and data used in examples herein are fictitious unless otherwise noted. No part of this document may be reproduced or transmitted in any form or by any means, electronic or mechanical, for any purpose, nor transferred to any other media or language without the written permission of Cognex Corporation.

Portions of the hardware and software provided by Cognex may be covered by one or more U.S. and foreign patents, as well as pending U.S. and foreign patents listed on the Cognex web site at: cognex.com/patents.

In the event of any inconsistency between the English language version of this documentation and any other language version, the English language version shall take precedence.

Copyright © 2026. Cognex Corporation. All Rights Reserved.

The following are registered U.S. trademarks of Cognex Corporation:

2DMAX, 3D LIGHTBURST TECHNOLOGY, ADVANTAGE, ALIGNPLUS, ASSEMBLYPLUS, COGNEX, COGNEX VISION FOR INDUSTRY, CVL, DATAMAN, DVT, EASYBUILDER, EDGE INTELLIGENCE, HOTBARS, IDMAX, IN-SIGHT, LIGHTBURST, MX, OMNIVIEW, PATFIND, PATFLEX, PATINSPECT, PATMAX, PATMAX REDLINE, PATQUICK, POWERGRID, QUICKSORT, ULTRALIGHT, VISION SOLUTIONS, VISIONPRO, VISIONVIEW

The following are trademarks of the Cognex Corporation:

1DMAX, 3D SYMBOLIC LIGHT, 3D-LOCATE, 3DMAX, ONEVISION, PINPOINT, RANGEMAX, SLX, VIDI, OCRMAX, INSPECTEDGE, VISION SOLUTIONS

Portions copyright © Microsoft Corporation. All rights reserved.

Portions copyright © MadCap Software, Inc. All rights reserved.

Other product and company trademarks identified herein are the trademarks of their respective owners.

Precautions

To reduce the risk of injury or equipment damage, observe the following precautions when you install the Cognex product:

- The safety of any system incorporating this product is the responsibility of the assembler of the system.
- Do not install Cognex products where they are exposed to environmental hazards such as excessive heat, dust, moisture, humidity, impact, vibration, corrosive substances, flammable substances, or static electricity.
- Route cables and wires away from high-current wiring or high-voltage power sources to reduce the risk of damage or malfunction from the following causes: over-voltage, line noise, electrostatic discharge (ESD), power surges, or other irregularities in the power supply.
- Do not expose the image sensor to laser light. Image sensors can be damaged by direct, or reflected, laser light. If your application requires laser light that might strike the image sensor, use a lens filter at the corresponding laser wavelength. For suggestions, contact your local integrator or application engineer.
- This product does not contain user-serviceable parts. Do not make electrical or mechanical modifications to product components. Unauthorized modifications can void your warranty.
- Changes or modifications not expressly approved by the party responsible for regulatory compliance could void the user's authority to operate the equipment.
- Include service loops with cable connections.
- Ensure that the cable bend radius begins at least six inches from the connector. Cable shielding can be degraded or cables can be damaged or wear out faster if a service loop or bend radius is tighter than 10X the cable diameter.
- This device should be used in accordance with the instructions in this manual.
- All specifications are for reference purposes only and can change without notice.

Symbols

The following symbols indicate safety precautions and supplemental information:

WARNING: This symbol indicates a hazard that could cause death, serious personal injury or electrical shock.

CAUTION: This symbol indicates a hazard that could result in property damage.

Note: This symbol indicates additional information about a subject.

Tip: This symbol indicates suggestions and shortcuts that might not otherwise be apparent.

Table of Contents

Legal Notices 2
Precautions 3
Symbols 4
Table of Contents 5
Getting Started 7
About the In-Sight 3800 Series 7
In-Sight 3800 Series Accessories 8
Lenses 8
Lens Covers 13
Mounting Brackets 14
Cables 15
Illumination 15
Supported Lights 15
Integrated Lights 17
Integrated Light Accessories 18
Setting Up Your In-Sight Vision System 19
Vision System Layout 19
Dimensions 22
In-Sight 3800 with 45 mm Lens Cover 22
In-Sight 3800 with 60 mm Lens Cover 22
In-Sight 3800 with 75 mm Lens Cover 23
In-Sight 3800 Multi-Torch with Standard Front Cover 23
In-Sight 3800 Multi-Torch with Dome Attachment 24
In-Sight 3800 - Smart Camera Only 25
Field of View and Distance 26
In-Sight 3800 FoV values with 1.6 MP Sensor (IS3801) 26
In-Sight 3800 FoV values with 3 MP Sensor (IS3803) 28
In-Sight 3800 FoV values with 5 MP Sensor (IS3805) 30
In-Sight 3800 FoV values with 8 MP Sensor (IS3808) 32
In-Sight 3800 FoV values with 12 MP Sensor (IS3812) 35
In-Sight 3800 FoV values with 16 MP Sensor (IS3816) 38
Mounting the Vision System 41
Mounting Bracket (BKT-INS-01) 41
Converter Mounting Bracket (ISB-7000-7K) 42
Converter Mounting Bracket (ISB-7000-5K) 42
Connection Options 43
Connecting the Ethernet Cable 43
Connecting the Power and I/O Breakout Cable 43
Installing Lenses and Lighting 43
Installing the Bandpass Filter 43
Installing Lenses with Multi Torch 45
Attaching Lens Cover 49
Installing High Speed Liquid Lens with Torch-HR 51
Remove the Illumination Accessory PCB 52

Indicator LEDs 55
Using Your In-Sight Vision System 56
Installing the In-Sight Vision Suite 56
Trigger Types 56
External Triggers 56
Industrial Protocols 56
Specifications 58
In-Sight 3800 Series Vision System 58
In-Sight 3800 Series Vision System Image Sensor 59
Spectral Response Diagrams 59
LED Wavelengths 63
Torch-HR Integrated Lights 63
Acquisition Trigger Input 64
High-Speed Outputs 65
Ethernet Cable 66
External Light Connector 67
Breakout Cable 67
Cleaning and Maintenance 69
Clean the Housing 69
Clean the Vision System Image Sensor Window 69
Clean the Vision System Lens Cover 69
Regulations and Conformity 70
中国大陆RoHS (Information for China RoHS Compliance) 71
For European Community Users 71

Getting Started

This section provides general information about the In-Sight 3800 series vision system and the accessories and systems.

About the In-Sight 3800 Series

The In-Sight 3800 series is an advanced vision system that provides high speed, high resolution, and high flexibility in a powerful yet easy-to-use solution for inspection automation.

Embedded with a full set of robust rule-based tools and innovative edge learning technology, the In-Sight 3800 solves a wide range of manufacturing applications, from defect detection and assembly verification to character reading and more. It also enables you to:

- Run more inspections in less time.
- Improve the accuracy of the results.
- Scale your solution.
- Flexible Industry 4.0 connectivity options

In-Sight 3800 Series Accessories

You can purchase the following components separately. For a list of options and accessories, contact your local Cognex sales representative.

Lenses

This section lists the lenses supported by the In-Sight 3800 vision system. The tables group lenses by vision system configuration and indicate lens cover compatibility.

Note:
Keep the following in mind:

- Moritex lenses previously had the prefix LMC in the product number (for example ML-M0625UR was previously named LMC-ML-M0625UR). If you purchased a Moritex lens under the previous product number, you can still refer to the compatibility tables using the product number without the LMC prefix.
- For more information about lens focus distance ranges, see *High-Speed Liquid Lens Focus Distances* on page 12.

In-Sight 3801, 3803, and 3805 Lenses

The following table shows the lenses compatible with the In-Sight 3801, 3803, and 3805 vision systems:

Accessory	Product Number	Illustration	IS3801	IS3803	IS3805	Compatible Lens Covers
8 mm High Speed Liquid Lens - Visible and Near-IR Light **Note**: Compatible with IS3801 if using Multi Torch. Compatible with IS3801/3803 if using C-mount cover.	CLN-C08F8FS-HSLL		✓	✓		15, 45 mm lens covers
10 mm High Speed Liquid Lens - Visible and Near-IR Light **Note**: Compatible with IS3801 if using Multi Torch. Compatible with IS3801/3803/3805 if using C-mount cover.	CLN-C10F5FS-HSLL		✓	✓	✓	

Accessory	Product Number	Illustration	IS3801	IS3803	IS3805	Compatible Lens Covers
16 mm High Speed Liquid Lens - Visible and Near-IR Light	CLN-C16F8FS-HSLL		✓	✓	✓	45 mm lens covers
24 mm High Speed Liquid Lens - Visible and Near-IR Light	CLN-C24F6FS-HSLL		✓	✓	✓	
35 mm High Speed Liquid Lens - Visible and Near IR Light	CLN-C35F8FS-HSLL		✓	✓	✓	
16 mm Manual Focus lens for Multi Torch - Visible and Near IR Light	CLN-C16F8FS		✓	✓	✓	
24 mm Manual Focus lens for Multi Torch - Visible and Near-IR Light	CLN-C24F6FS		✓	✓	✓	
8 mm Moritex HR series lens	ML-M0818HR		✓			
12 mm Moritex HR series lens	ML-M1218HR		✓			45 60, 75 mm lens covers
16 mm Moritex HR series lens	ML-M1618HR		✓			
25 mm Moritex HR series lens	ML-M2518HR		✓			
35 mm Moritex HR series lens	ML-M3520HR		✓			
50 mm Moritex HR series lens	ML-M5025HR		✓			60, 75 mm lens covers

Accessory	Product Number	Illustration	IS3801	IS3803	IS3805	Compatible Lens Covers
4 mm Moritex UR series lens	ML-M0420UR		✓	✓	✓	N/A, Cognex recommends using connector covers (380-CON-PLUGS)
6 mm Moritex UR series lens	ML-M0625UR		✓	✓	✓	
8 mm Moritex UR series lens	ML-M0822UR		✓	✓	✓	45 mm lens cover
12 mm Moritex UR series lens	ML-M1218UR		✓	✓	✓	45, 60, 75 mm lens covers
16 mm Moritex UR series lens	ML-M1616UR		✓	✓	✓	
25 mm Moritex UR series lens	ML-M2516UR		✓	✓	✓	
35 mm Moritex UR series lens	ML-M3520UR		✓	✓	✓	
50 mm Moritex UR series lens	ML-M5025UR		✓	✓	✓	60, 75 mm lens covers
75 mm Moritex UR series lens	ML-M7528UR		✓	✓	✓	75 mm lens cover
100 mm Moritex UR series lens (supporting 2.5-micron pixels)	ML-U10028UR-18C		✓	✓	✓	

In-Sight 3808, 3812, and 3816 Lenses

The following table shows the lenses compatible with the In-Sight 3808, 3812, and 3816 vision systems:

Accessory	Product Number	Illustration	IS3808	IS3812	IS3816	Compatible Lens Covers
16 mm HSLL - high resolution	CLN-C16F65-HSLL-HR		✓	✓		60, 75 mm lens covers
25 mm HSLL - high resolution	CLN-C25F65-HSLL-HR		✓	✓		
35 mm HSLL - high resolution	CLN-C35F06-HSLL-HR		✓	✓		

Accessory	Product Number	Illustration	IS3808	IS3812	IS3816	Compatible Lens Covers
6 mm Moritex SR series lens	ML-U0618SR-18C		✓	✓	✓	N/A, Cognex recommends using connector covers (380-CON-PLUGS)
8 mm Moritex SR series lens	ML-U0817SR-18C		✓	✓	✓	
12 mm Moritex SR series lens	ML-U1217SR-18C		✓	✓	✓	75 mm lens cover
16 mm Moritex SR series lens	ML-U1615SR-18C		✓	✓	✓	
25 mm Moritex SR series lens	ML-U2515SR-18C		✓	✓	✓	
35 mm Moritex SR series lens	ML-U3518SR-18C		✓	✓	✓	60, 75 mm lens covers
50 mm Moritex SR series lens	ML-U5022SR-18C		✓	✓	✓	
100 mm Moritex UR series lens (supporting 2.5-micron pixels)	ML-U10028UR-18C		✓	✓	✓	75 mm lens cover
8 mm Moritex ZR series lens	ML-U0828ZR-19C		✓	✓	✓	N/A, Cognex recommends using connector covers (380-CON-PLUGS)
12 mm Moritex ZR series lens	ML-U1228ZR-19C		✓	✓	✓	75 mm lens cover
16 mm Moritex ZR series lens	ML-U1628ZR-19C		✓	✓	✓	
25 mm Moritex ZR series lens	ML-U2528ZR-19C		✓	✓	✓	
35 mm Moritex ZR series lens	ML-U3528ZR-19C		✓	✓	✓	
50 mm Moritex ZR series lens	ML-U5028ZR-19C		✓	✓	✓	

Telecentric Lenses

Moritex telecentric lenses support all In-Sight 3800 configurations. Telecentric lenses provide high-contrast, high-resolution, and low-distortion results by reducing perspective errors and magnification changes. These lenses are suitable for alignment and guidance applications.

Note: For more information, download the Telecentric Lens Catalog from https://www.cognex.com/en/tools-and-resources/resource-center/telecentric-lens-catalog.

High-Speed Liquid Lens Focus Distances

The following table lists the focus distance ranges for High-Speed Liquid Lens (HSLL) supported by the In-Sight 3800 vision system, measured from the C-mount flange.

Lens model	Minimum focus distance (mm)	Maximum focus distance (mm)
CLN-C08F8FS-HSLL - 8 mm HSLL	100	1000
CLN-C10F5FS-HSLL - 10 mm HSLL	200	1000
CLN-C16F8FS-HSLL - 16 mm HSLL	250	4000
CLN-C24F6FS-HSLL - 24 mm HSLL	250	4000
CLN-C35F8FS-HSLL - 35 mm HSLL	500	4000
CLN-C16F65-HSLL-HR - 16 mm HSLL, high resolution	150	1000
CLN-C25F65-HSLL-HR - 25 mm HSLL, high resolution	300	4000
CLN-C35F06-HSLL-HR - 35 mm HSLL, high resolution	500	4000

Lens Covers

Accessory	Product Number	Illustration
15 mm Plastic Lens Cover	COV-380-CMNT-15	
45 mm Plastic Lens Cover	COV-380-CMNT-45	
60 mm Plastic Lens Cover	COV-380-CMNT-60	
75 mm Plastic Lens Cover	COV-380-CMNT-75	
30 mm Lens Cover Extender	COV-7000-CMNT-LGX	
Multi Torch front cover - Diffused	380-TORCH-COVDIF	
Multi Torch front cover - Cross-Polarized	380-TORCH-COVPOL	
Multi Torch front cover - Clear	380-TORCH-COVCLR	
ESD safe Multi Torch front cover	380-TORCH-COVCLESD	
Dome Attachment for 380 platform Multi Torch and DataMan HPIT	380-TORCH-DOME	
Covers for integrated light and autofocus lens connectors on faceplate	380-CON-PLUGS	
Torch-HR diffused front cover	380-TORCH-HR-COVDF	
Torch-HR polarized front cover	380-TORCH-HR-COVPL	
Torch-HR clear front cover	380-TORCH-HR-COVCL	

Mounting Brackets

Accessory	Product Number	Illustration
U-shaped mounting bracket for IS3800 with Torch-HR, M6 mounting holes	DMBK-PVT-HPIT-380	
Mounting bracket with M3, M4 and 1/4 - 20 mounting holes	BKT-INS-01	
Converter mounting bracket with M3 socket head screws/wrench	ISB-7000-7K	
Converter mounting bracket with Phillips flat head M3 screws and M4 screws	ISB-7000-5K	

Cables

Note: Cables are sold separately.

Accessory	Product Number	Illustration
External Light Cable, Yellow **Note**: This cable supports intensity control.	IVSL-5PM12-J300 IVSL-5PM12-J500 IVSL-5PM12-J1000 IVSL-5PM12-J2000	
External Light Cable, Black **Note**: This cable supports intensity control and is used with standard SVL lights.	IVSL-M12-NSB-300 IVSL-M12-NSB-1000 IVSL-M12-NSB-2000	
External Light Cable, Grey **Note**: This cable does not support intensity control.	CCB-M12LTF-xx (xx specifies length: 0.5m, 1m, 2m, 5m)	
Black M12 to M12 cable with a small in-line capacitor (2 m)	ICQ-CB-0.5-IFL-M12	
Ethernet Cable, X-coded M12-8 to RJ-45	CCB-84901-2001-xx (straight, xx specifies length: 2m, 5m, 10m, 15m, 30m)	
Ethernet Cable, X-coded M12-8 to RJ-45	CCB-84901-2RBT-xx (straight, xx specifies length: 2m, 5m, 10m)	
Breakout Cable, M12-12 to Flying Lead	CCB-PWRIO- xx (straight, xx specifies length: 5m, 10m, 15m)	

Illumination

Accessory	Product Number	Illustration
PCB	380-LIGHT-PCB	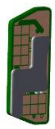

Supported Lights

The In-Sight 3800 supports analog lights and smart lights.

There are over 90 smart lights in a variety of sizes and forms, which are available separately. All smart lights are available in red, blue, or white colors. This document only provides an overview of the types of smart lights that are available. For a detailed list of the supported lights in all available sizes, go to Machine Vision Lighting or contact Cognex support.

Note:
In-Sight 3800 supports analog lights, which need a different setting for intensity control. For more information, see the following documentation:

- *External Light Connector* on page 67
- The *Camera Configuration* section of the *In-Sight Vision Suite Software Manual* on the Cognex Support Site

The following table provides information on the types of smart lights available:

Accessory	Product Number	Illustration
Bar Lights Available lengths: 41-242 mm	CEL-BA	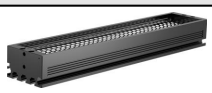
Backlights Available lengths: 27-224 mm	CEL-BL	
Coaxial Lights Available lengths: 20-50 mm	CEL-CX	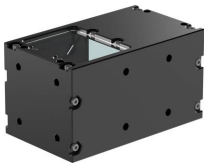
Dome Lights Available diameters: 80-285 mm	CEL-DM3	
Diffuse Square Lights Available lengths: 48-120 mm	CEL-DQH	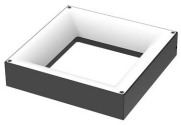
Diffuse Ring Lights Available diameter: 150 mm	CEL-DRW	
Ring Lights Available diameters: 42-210 mm	CEL-RH	
Low-Angle Ring Lights Available lengths: 75-120 mm	CEL-RL	

Integrated Lights

Accessory	Product Number	Illustration
Multi Torch Accessory Kit for autofocus lenses (RGBW-IR Light w/ ToF and Laser Aimer) Includes: Multi Torch Illumination module, mount for illumination module (High Speed Liquid Lenses only), Diffused cover, Illumination PCB, 2 mm hex tool Accessory Model 50231	380-TORCH-MULTI-AF	
Multi Torch Accessory Kit for manual focus lenses (RGBW-IR w/ ToF and Laser Aimer) Includes: Multi Torch Illumination module, mount for illumination module (manual focus lenses only), Diffused cover, Illumination PCB, 2 mm hex tool Accessory Model 50231	380-TORCH-MULTI-MF	
Red Torch-HR Accessory kit for high resolution IS3800 models Includes: Red Torch-HR illumination module, diffused cover, illumination cable, 2 mm hex tool	380-TORCH-RED-HR	
White Torch-HR Accessory kit for high resolution IS3800 models Includes: White Torch-HR illumination module, diffused cover, illumination cable, 2 mm hex tool	380-TORCH-WHITE-HR	

WARNING: Multi Torch and Torch-HR devices equipped with a Time-of-Flight sensor, the device has been tested to be under the limits of a Class 1 Laser device.



CAUTION: Multi Torch and Torch-HR devices equipped with a target aimer have been tested in accordance with IEC 60825-1. 3rd ed. 2014, and have been certified to be under the limits of a Class 2 Laser device.

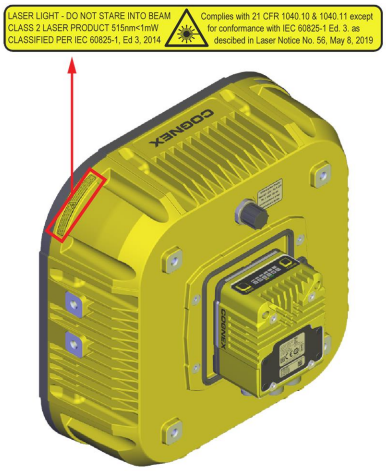

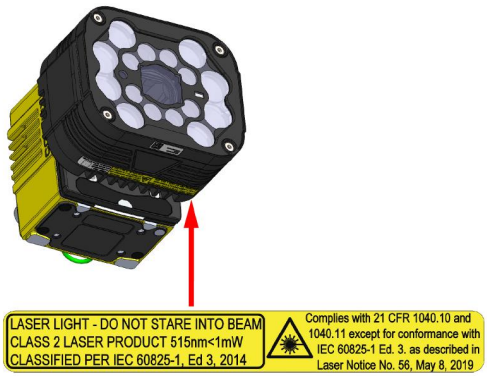

Integrated Light Accessories

Accessory	Product Number	Illustration	IS3901	IS3905 (3 MP mode)	IS3905
Blue bandpass filter for Multi Torch	380-TORCH-BP450		✓	✓	✓
Red bandpass filter for Multi Torch	380-TORCH-BP635		✓	✓	✓

Setting Up Your In-Sight Vision System

Read this section to learn how the vision system connects to its standard components and accessories.

Note:

- Cables are sold separately.
- If a standard component is missing or damaged, immediately contact your Cognex Authorized Service Provider (ASP) or Cognex Technical Support.

CAUTION: All cable connectors are keyed to fit the connectors on the vision system. Do not force the connections or damage may occur.

Vision System Layout

The image and table below shows the elements of the vision system.

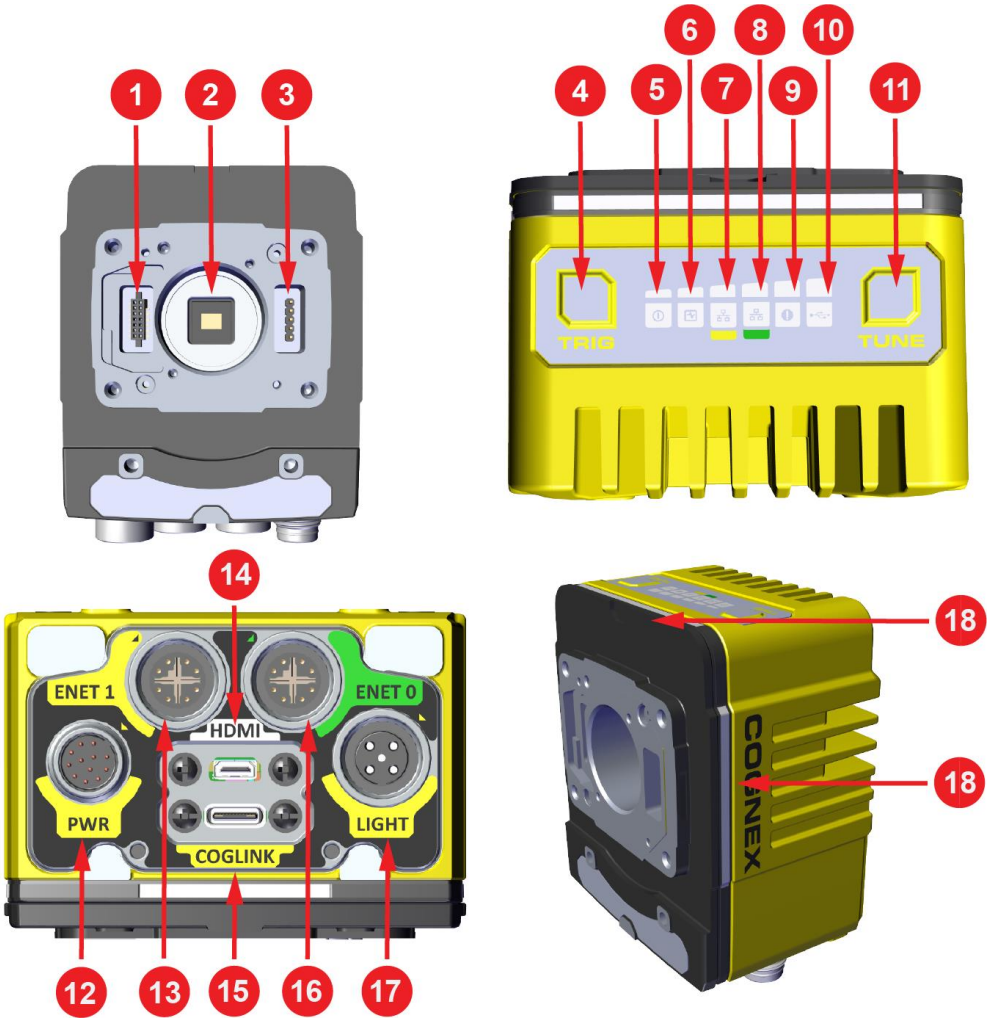

Number	Description
1	Integrated Illumination connector

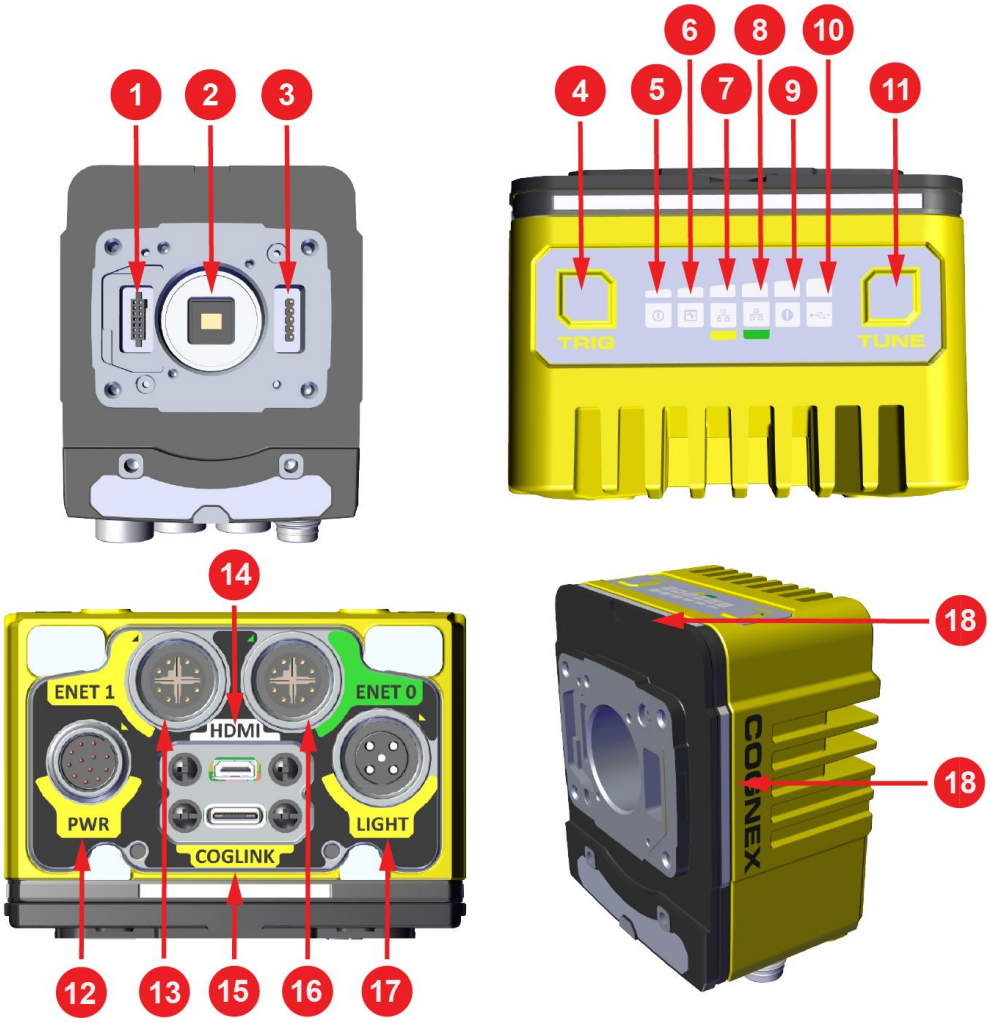

2	Imager/C-mount flange
3	Lens connector
4	Trigger button
5	Power LED indicator
6	Train status LED indicator
7	Ethernet 1 status LED
8	Ethernet 0 status LED
9	Error LED indicator
10	Coglink/USB-C status LED
11	Tune button
12	Power I/O Breakout cable connector
13	Ethernet connector 1
14	Micro-HDMI connector
15	Coglink/USB-C connector

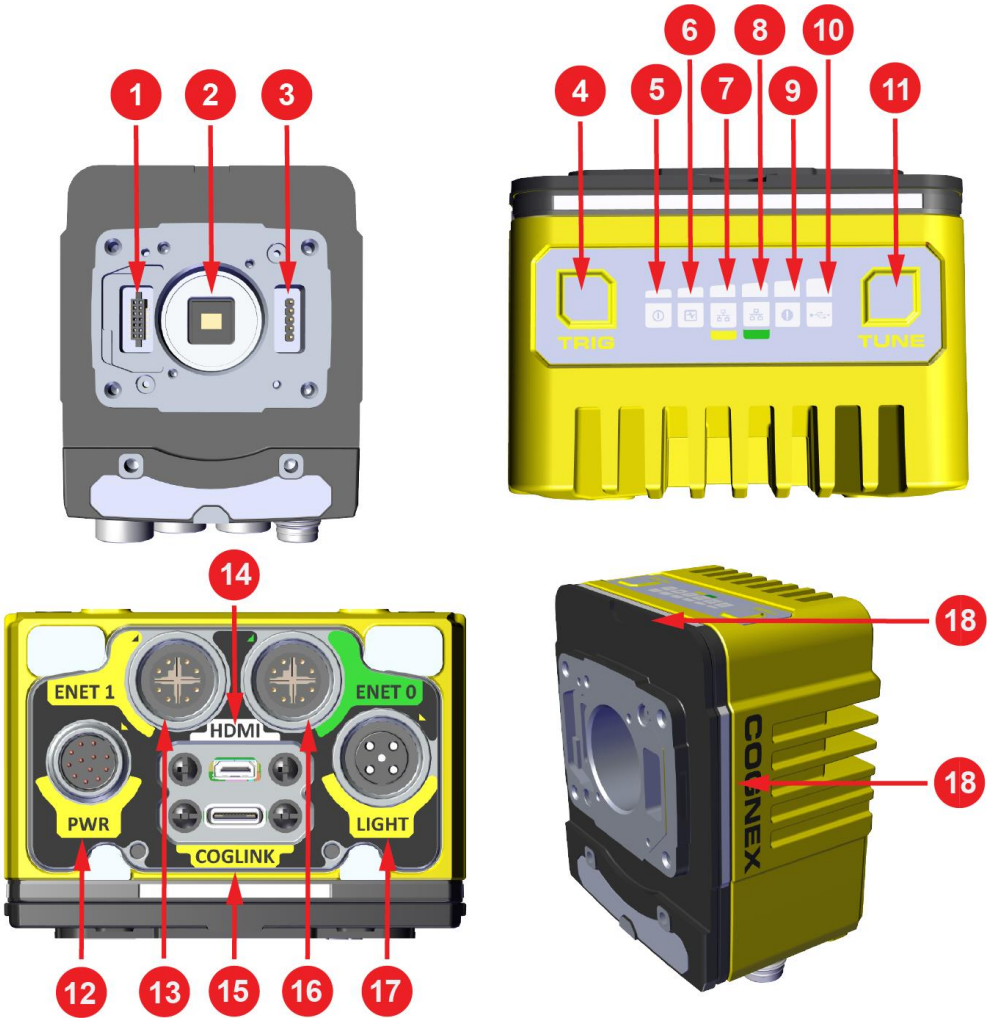

16	Ethernet connector 0
17	Light connector
18	Ring LED indicator

Dimensions

The following sections list dimensions of the vision system.

Note:

- Dimensions are in millimeters and are for reference purposes only.
- All specifications are for reference purposes only and can change without notice.

In-Sight 3800 with 45 mm Lens Cover

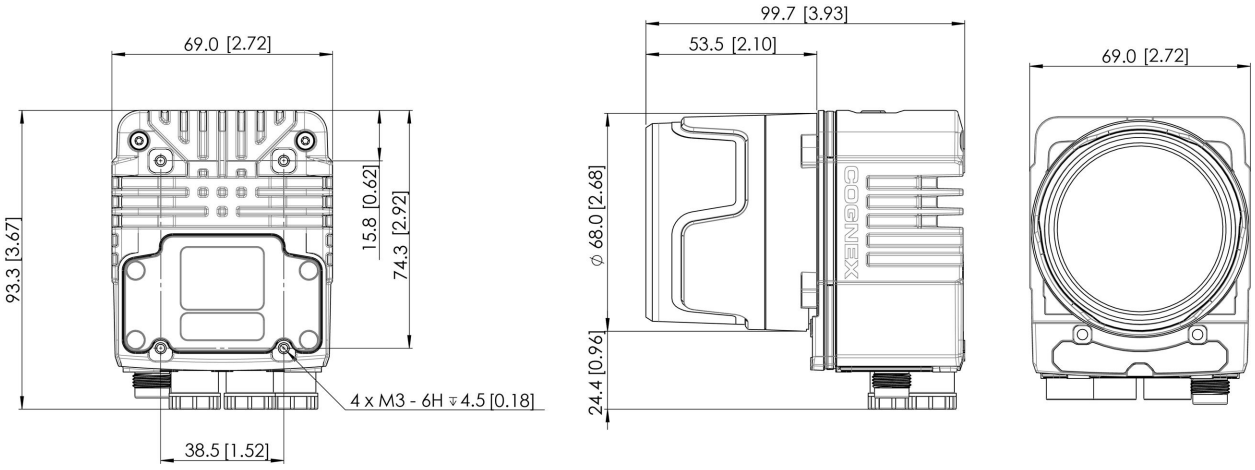

In-Sight 3800 with 60 mm Lens Cover

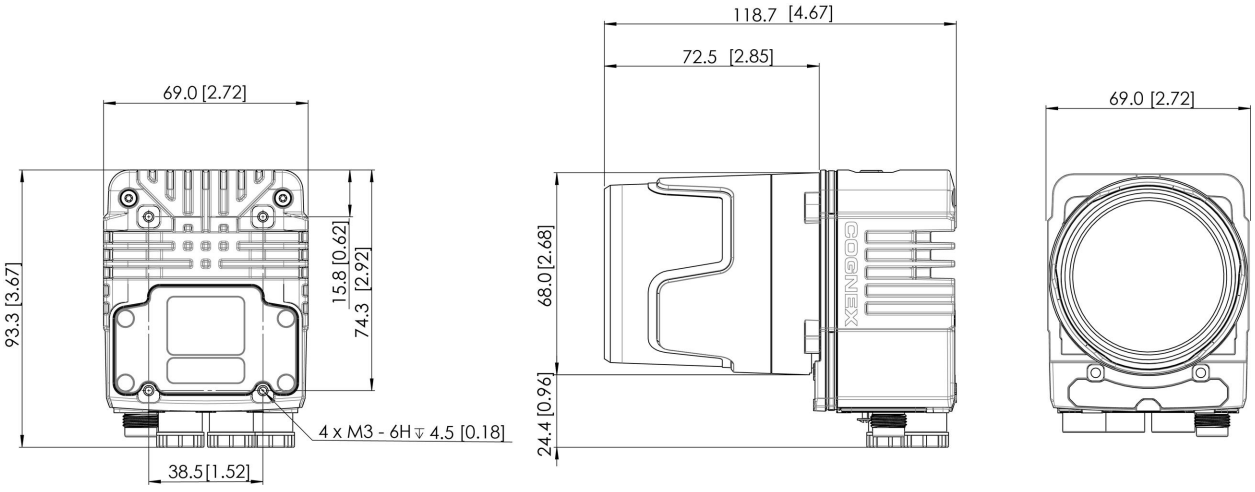

In-Sight 3800 with 75 mm Lens Cover

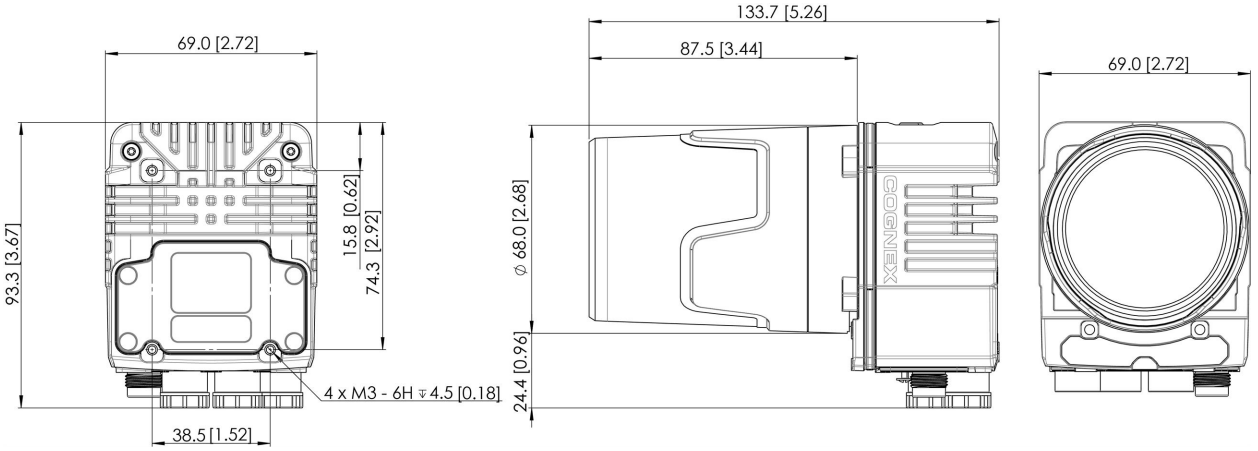

In-Sight 3800 Multi-Torch with Standard Front Cover

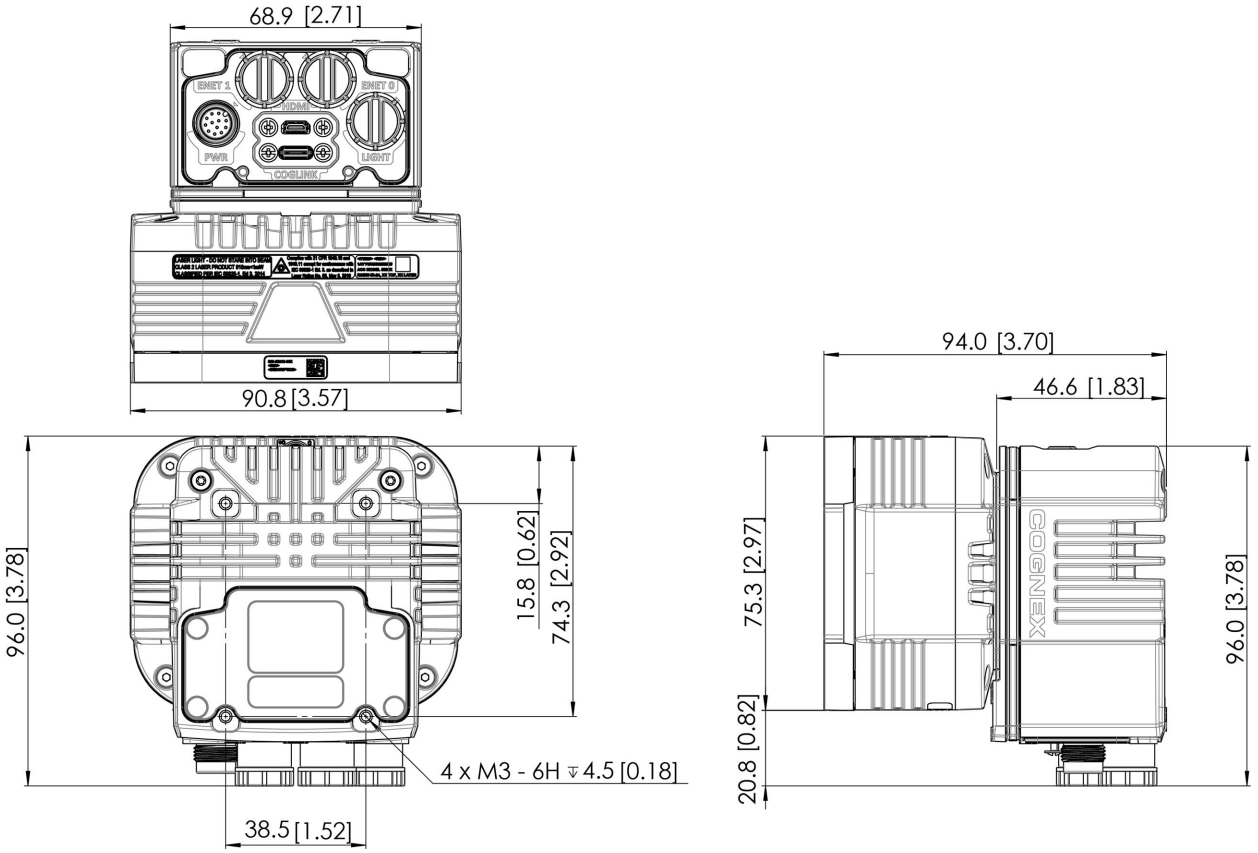

In-Sight 3800 Multi-Torch with Dome Attachment

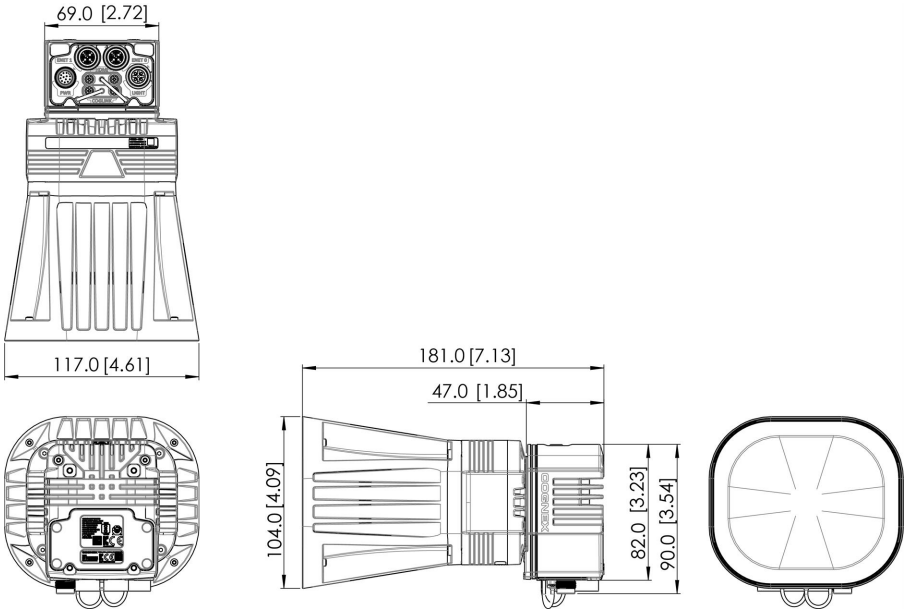

In-Sight 3800 - Smart Camera Only

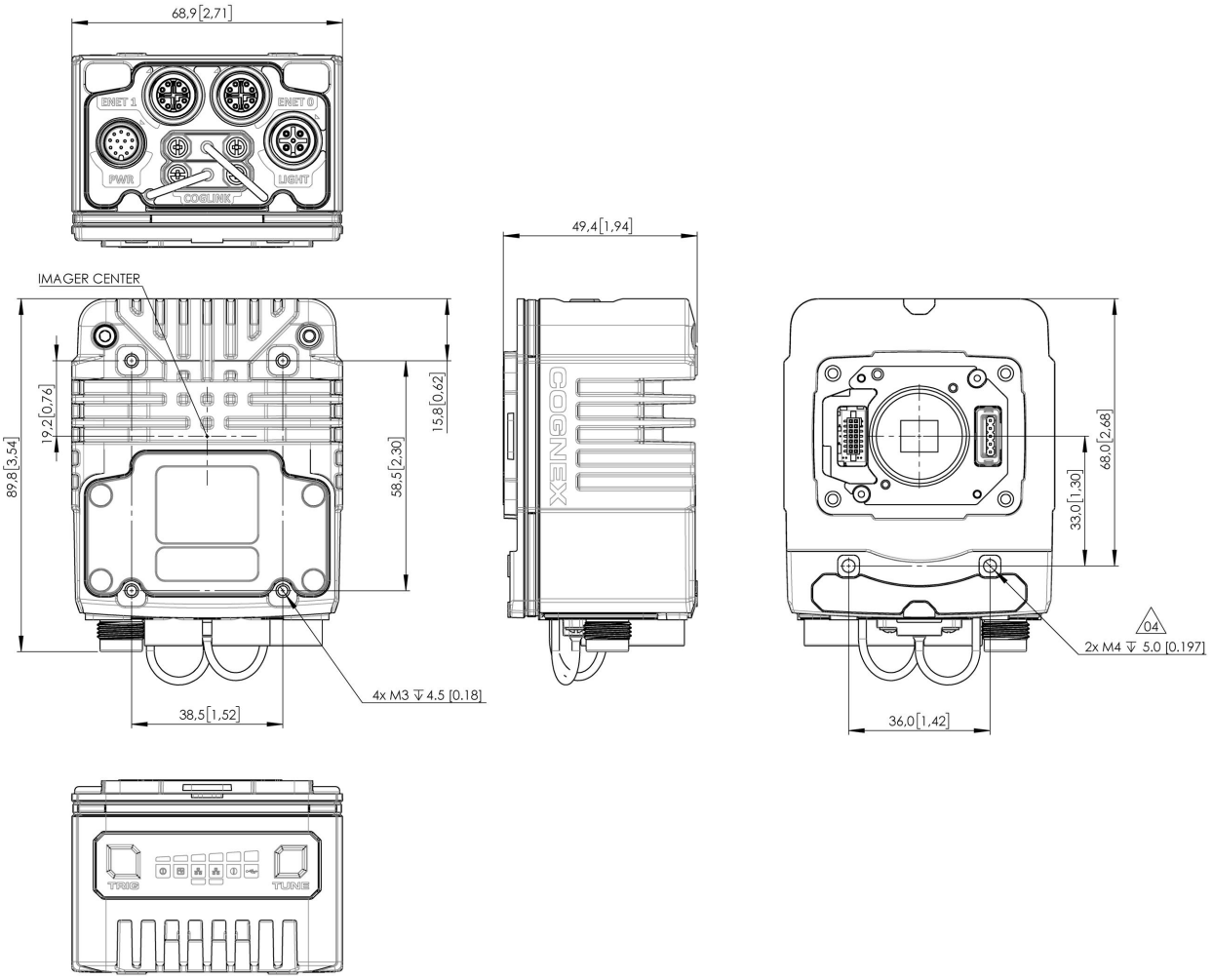

Field of View and Distance

This section provides the Field of View (FoV) values for the various In-Sight 3800 vision systems.

In-Sight 3800 FoV values with 1.6 MP Sensor (IS3801)

16 mm Focal Length:

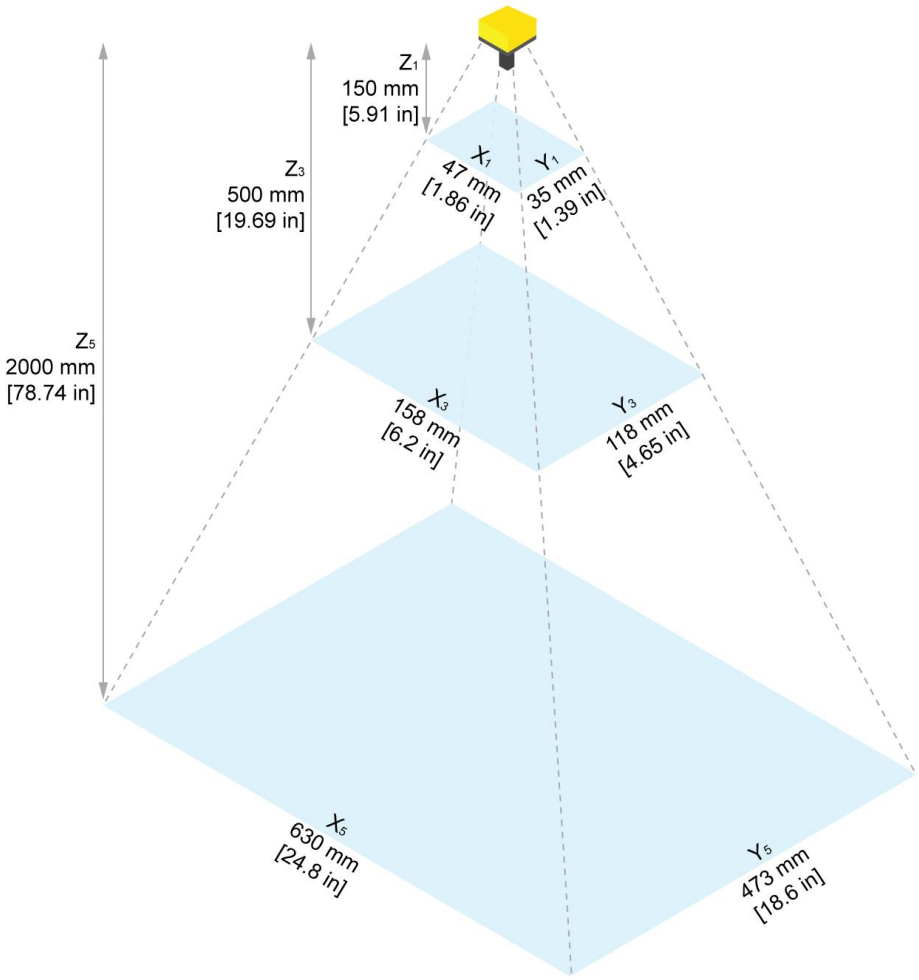

Working Distance	Horizontal Values	Vertical Values	Diagonal Values
150 mm [5.91 in]	47 mm [1.86 in]	35 mm [1.39 in]	59 mm [2.33 in]
200 mm [7.87 in]	63 mm [2.48 in]	47 mm [1.86 in]	79 mm [3.1 in]
500 mm [19.69 in]	158 mm [6.2 in]	118 mm [4.65 in]	197 mm [7.75 in]
1000 mm [39.37 in]	315 mm [12.4 in]	236 mm [9.3 in]	394 mm [15.5 in]
2000 mm [78.74 in]	630 mm [24.8 in]	473 mm [18.6 in]	788 mm [31 in]

24 mm Focal Length:

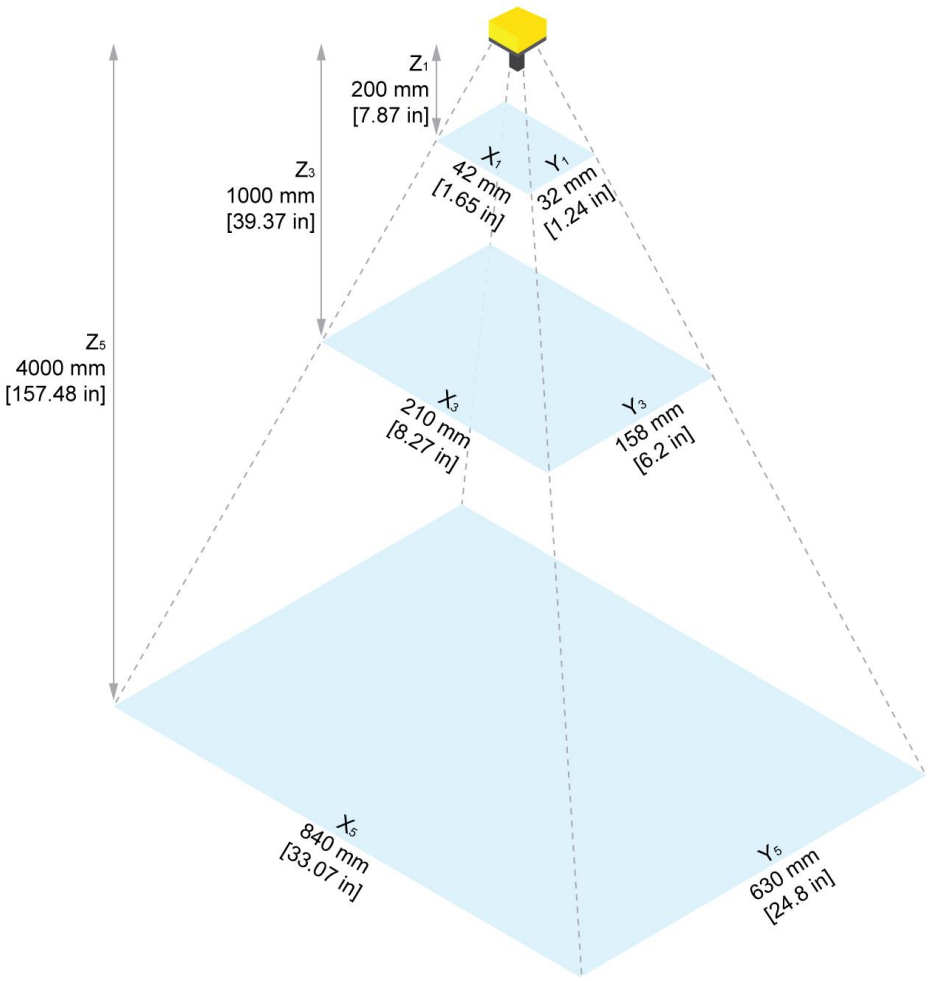

Working Distance	Horizontal Values	Vertical Values	Diagonal Values
200 mm [7.87 in]	42 mm [1.65 in]	32 mm [1.24 in]	53 mm [2.07 in]
500 mm [19.69 in]	105 mm [4.13 in]	79 mm [3.1 in]	131 mm [5.17 in]
1000 mm [39.37 in]	210 mm [8.27 in]	158 mm [6.2 in]	263 mm [10.33 in]
2000 mm [78.74 in]	420 mm [16.54 in]	315 mm [12.4 in]	525 mm [20.67 in]
4000 mm [157.48 in]	840 mm [33.07 in]	630 mm [24.8 in]	1050 mm [41.34 in]

In-Sight 3800 FoV values with 3 MP Sensor (IS3803)

16 mm Focal Length:

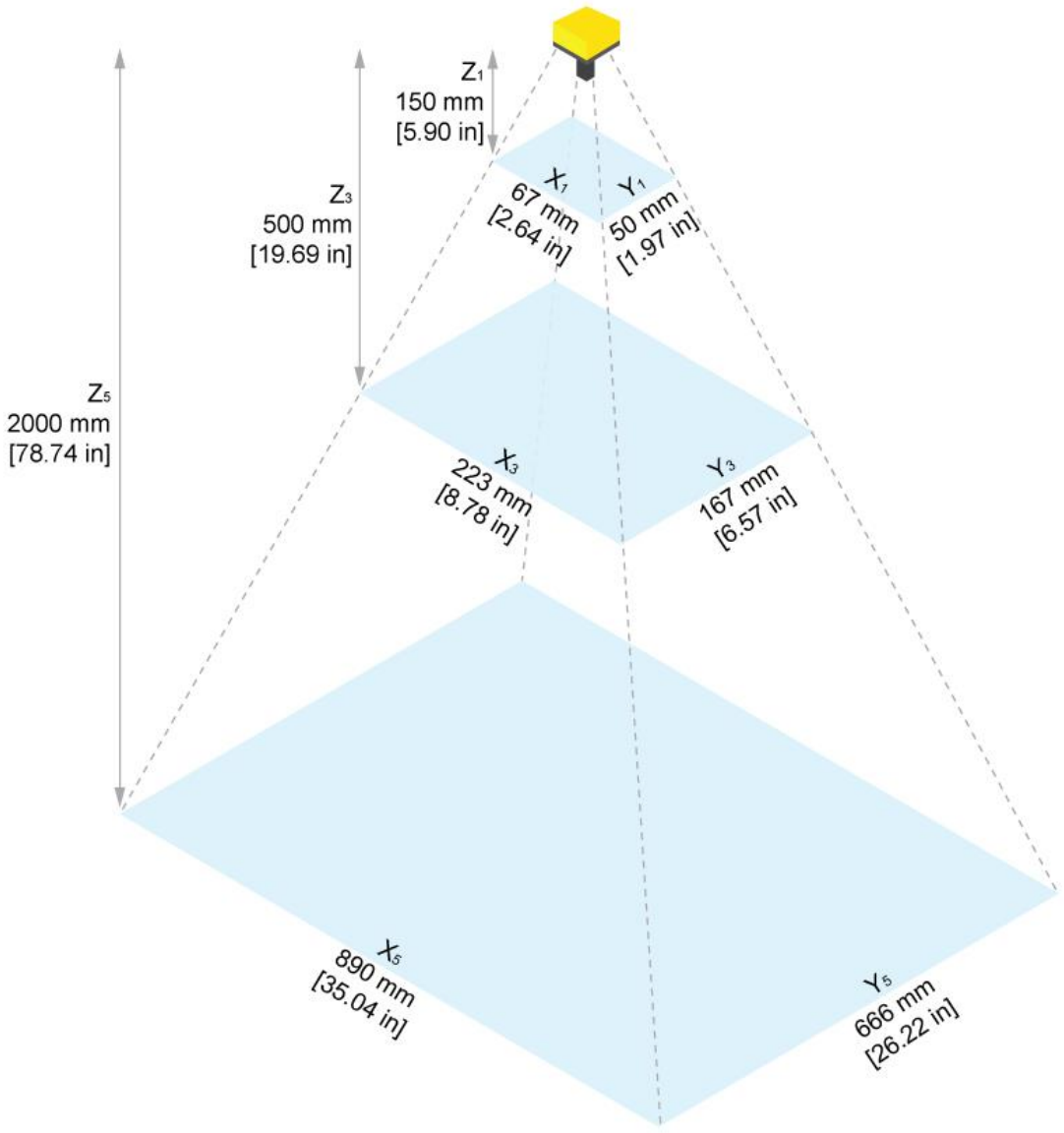

Working Distance	Horizontal Values	Vertical Values	Diagonal Values
150 mm [5.90 in]	67 mm [2.64 in]	50 mm [1.97 in]	83 mm [3.27 in]
200 mm [7.87 in]	89 mm [3.50 in]	67 mm [2.64 in]	111 mm [4.37 in]
500 mm [19.69 in]	223 mm [8.78 in]	167 mm [6.57 in]	278 mm [10.94 in]
1000 mm [39.37 in]	445 mm [17.52 in]	333 mm [13.11 in]	579 mm [22.80 in]
2000 mm [78.74 in]	890 mm [35.04 in]	666 mm [26.22 in]	1112 mm [43.78 in]

24 mm Focal Length:

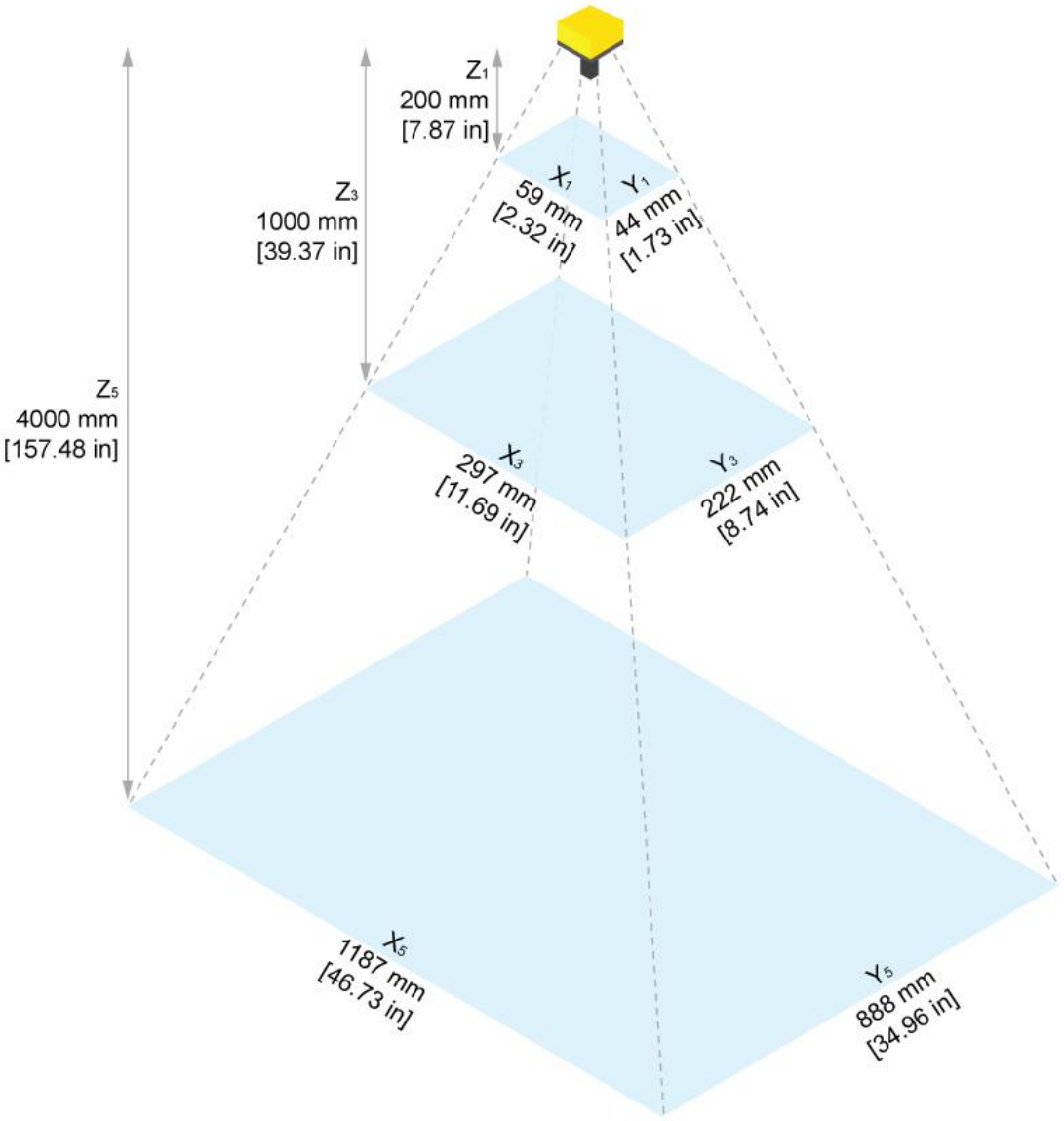

Working Distance	Horizontal Values	Vertical Values	Diagonal Values
200 mm [7.87 in]	59 mm [2.32 in]	44 mm [1.73 in]	74 mm [2.91 in]
500 mm [19.69 in]	148 mm [5.83 in]	111 mm [4.37 in]	185 mm [7.28 in]
1000 mm [39.37 in]	297 mm [11.69 in]	222 mm [8.74 in]	371 mm [14.60 in]
2000 mm [78.74 in]	593 mm [23.35 in]	444 mm [17.48 in]	741 mm [29.17 in]
4000 mm [157.48 in]	1187 mm [46.73 in]	888 mm [34.96 in]	1482 mm [58.35 in]

In-Sight 3800 FoV values with 5 MP Sensor (IS3805)

16 mm Focal Length:

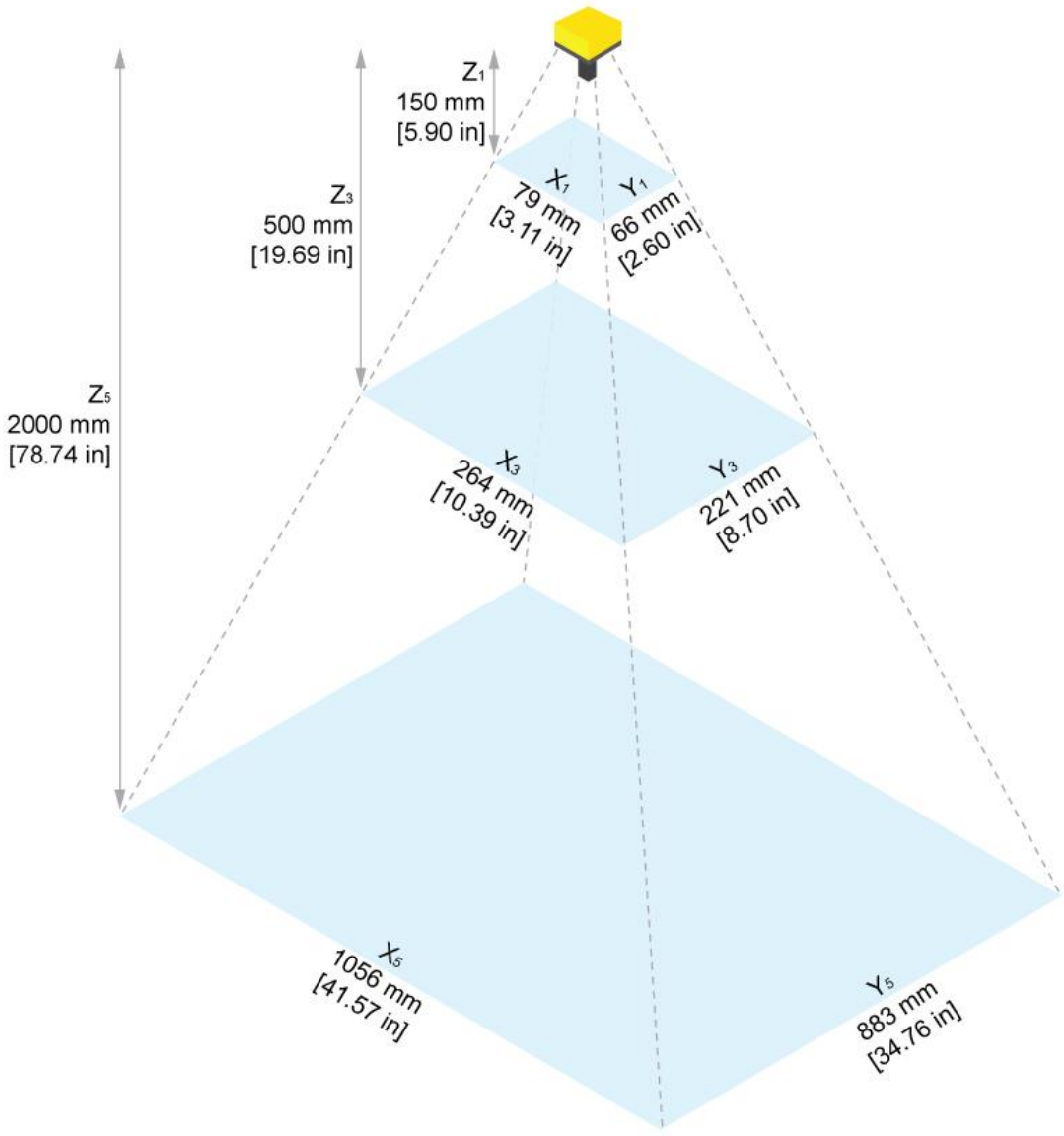

Working Distance	Horizontal Values	Vertical Values	Diagonal Values
150 mm [5.90 in]	79 mm [3.11 in]	66 mm [2.60 in]	103 mm [4.06 in]
200 mm [7.87 in]	106 mm [4.17 in]	88 mm [3.46 in]	138 mm [5.43 in]
500 mm [19.69 in]	264 mm [10.39 in]	221 mm [8.70 in]	344 mm [13.54 in]
1000 mm [39.37 in]	528 mm [20.79 in]	442 mm [17.40 in]	688 mm [27.09 in]
2000 mm [78.74 in]	1056 mm [41.57 in]	883 mm [34.76 in]	1376 mm [54.17 in]

24 mm Focal Length:

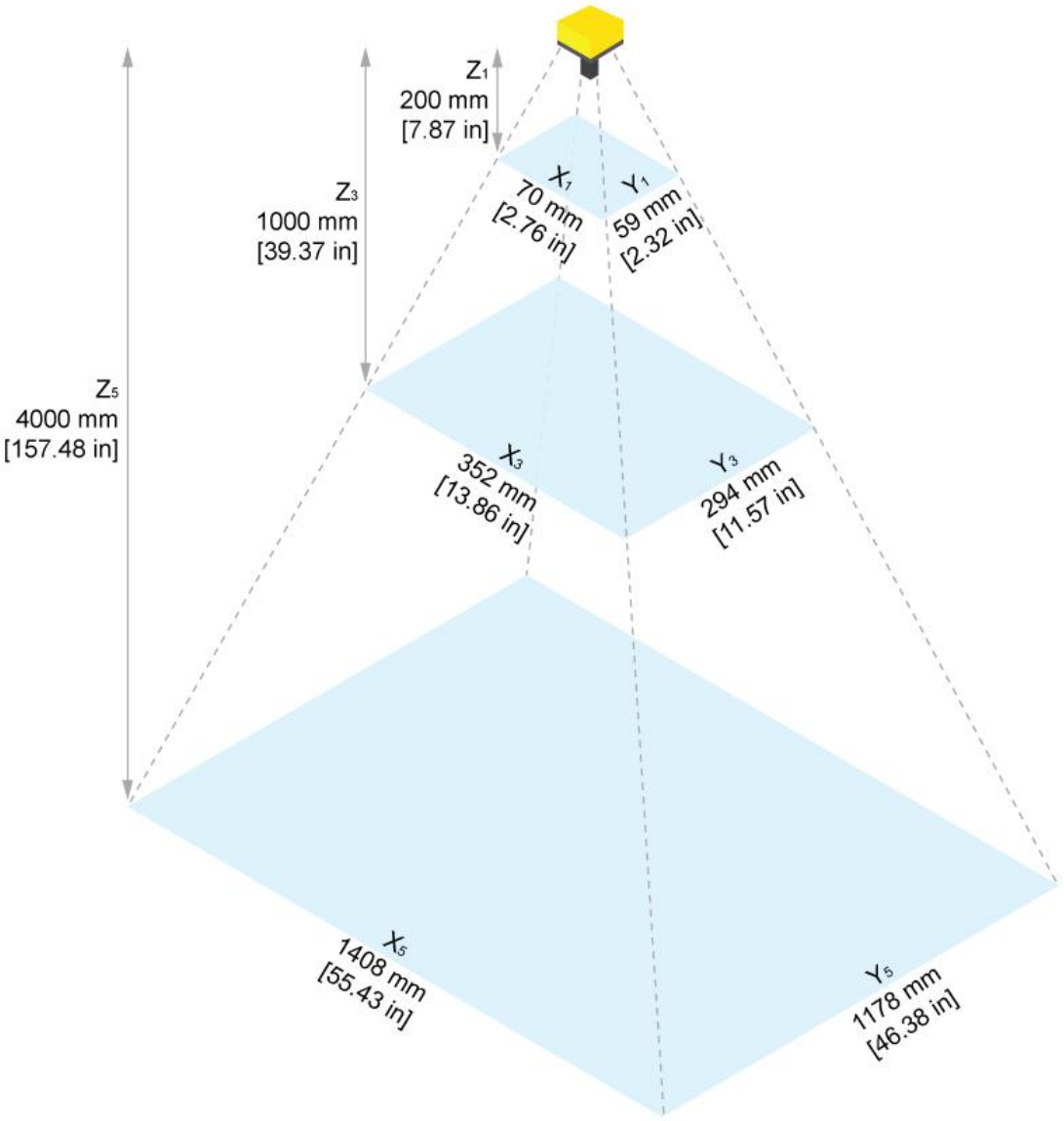

Working Distance	Horizontal Values	Vertical Values	Diagonal Values
200 mm [7.87 in]	70 mm [2.76 in]	59 mm [2.32 in]	92 mm [3.62 in]
500 mm [19.69 in]	176 mm [6.93 in]	147 mm [5.79 in]	229 mm [9.02 in]
1000 mm [39.37 in]	352 mm [13.86 in]	294 mm [11.57 in]	459 mm [18.07 in]
2000 mm [78.74 in]	704 mm [27.72 in]	589 mm [23.19 in]	918 mm [36.14 in]
4000 mm [157.48 in]	1408 mm [55.43 in]	1178 mm [46.38 in]	1835 mm [72.24 in]

In-Sight 3800 FoV values with 8 MP Sensor (IS3808)

16 mm Focal Length:

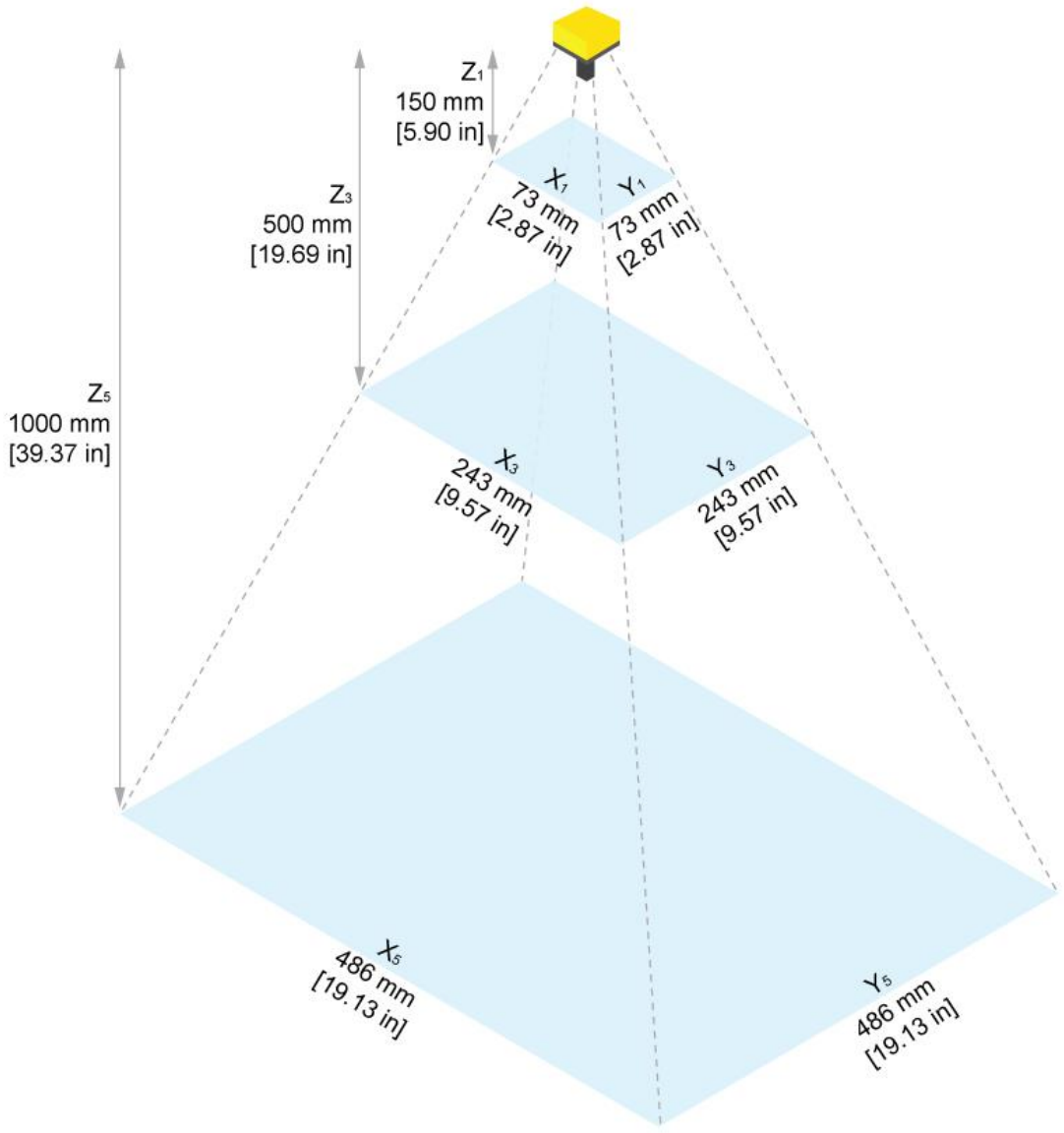

Working Distance	Horizontal Values	Vertical Values	Diagonal Values
150 mm [5.90 in]	73 mm [2.87 in]	73 mm [2.87 in]	103 mm [4.06 in]
250 mm [9.84 in]	122 mm [4.80 in]	122 mm [4.80 in]	172 mm [6.77 in]
500 mm [19.69 in]	243 mm [9.57 in]	243 mm [9.57 in]	344 mm [13.54 in]
750 mm [29.53 in]	365 mm [14.37 in]	365 mm [14.37 in]	516 mm [20.31 in]
1000 mm [78.74 in]	486 mm [41.57 in]	486 mm [41.57 in]	687 mm [27.05 in]

25 mm Focal Length:

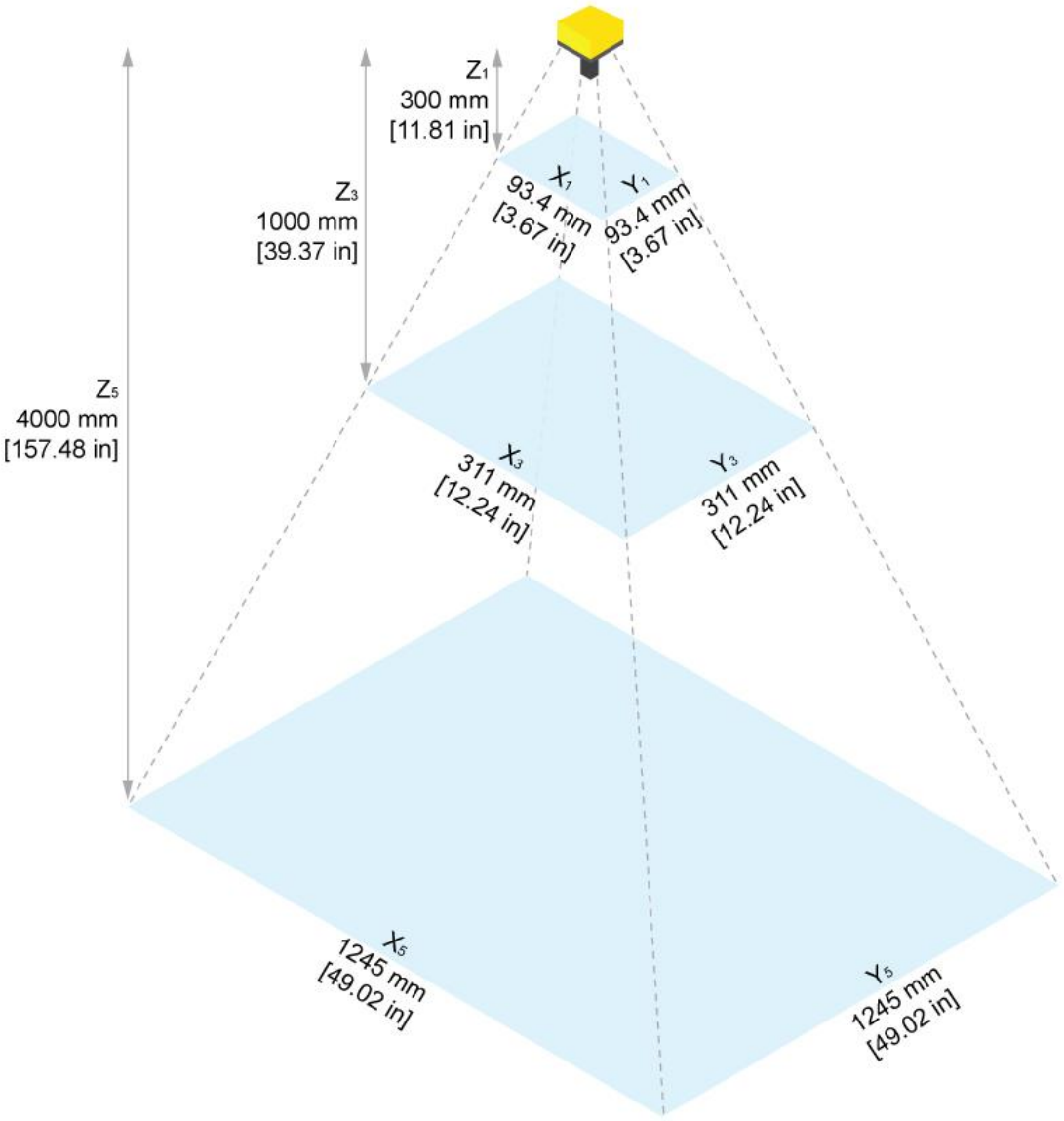

Working Distance	Horizontal Values	Vertical Values	Diagonal Values
300 mm [11.81 in]	93 mm [3.66 in]	93 mm [3.66 in]	132 mm [5.20 in]
500 mm [19.69 in]	155 mm [6.10 in]	155 mm [6.10 in]	220 mm [8.66 in]
1000 mm [39.37 in]	311 mm [12.24 in]	311 mm [12.24 in]	440 mm [17.32 in]
2000 mm [78.74 in]	620 mm [24.40 in]	620 mm [24.40 in]	880 mm [34.65 in]
4000 mm [157.48 in]	1240 mm [48.80 in]	1240 mm [48.80 in]	1760 mm [69.29 in]

35 mm Focal Length:

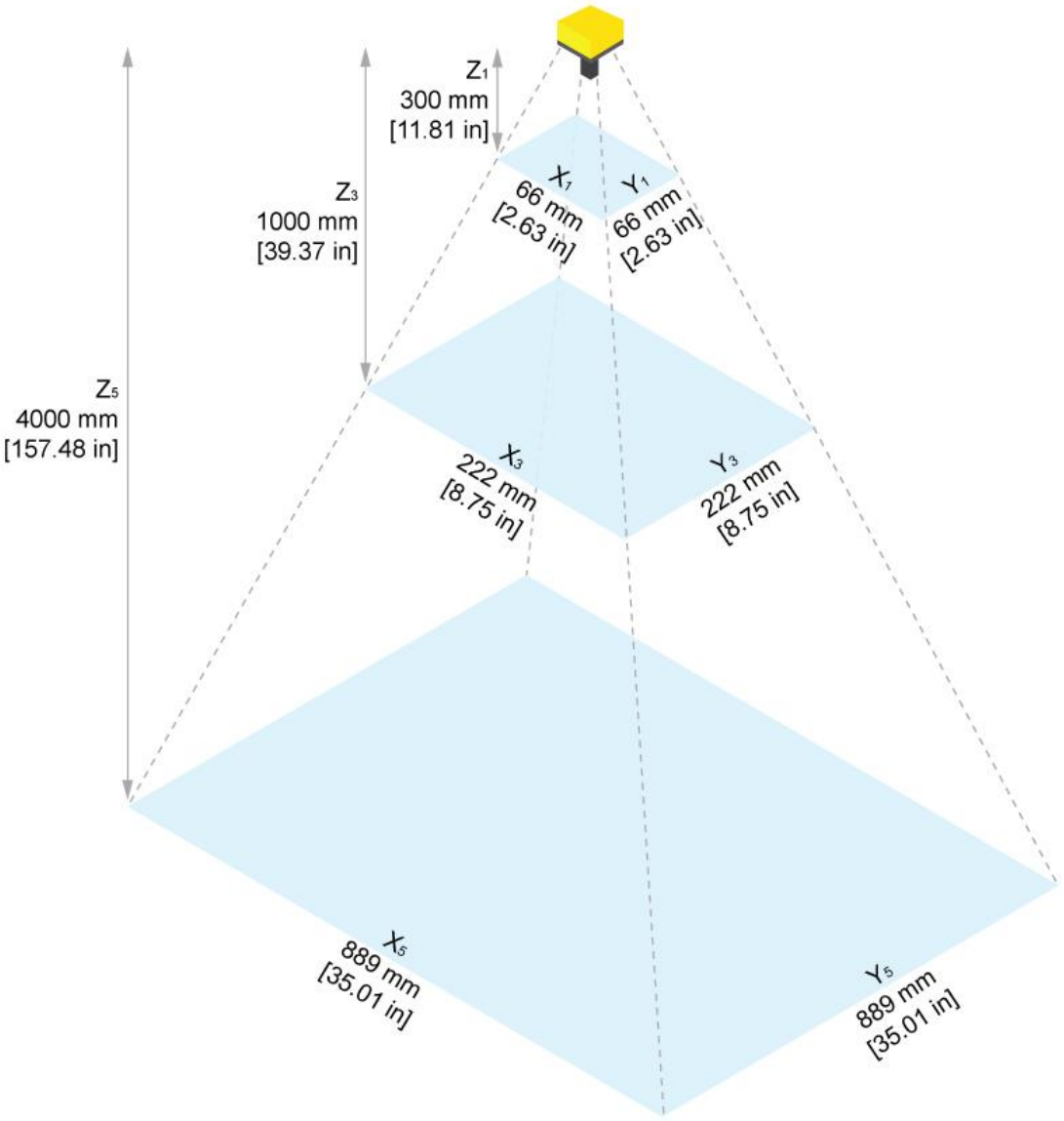

Working Distance	Horizontal Values in mm	Vertical Values in mm	Diagonal Values in mm
300 mm [11.81 in]	66.7 mm [2.63 in]	66.7 mm [2.63 in]	94.3 mm [3.72 in]
500 mm [19.69 in]	111 mm [4.37 in]	111 mm [4.37 in]	157 mm [6.18 in]
1000 mm [39.37 in]	222 mm [8.74 in]	222 mm [8.74 in]	315 mm [12.40 in]
2000 mm [78.74 in]	445 mm [17.52 in]	445 mm [17.52 in]	629 mm [24.76 in]
4000 mm [157.48 in]	889 mm [35.0 in]	889 mm [35.0 in]	1258 mm [49.53 in]

In-Sight 3800 FoV values with 12 MP Sensor (IS3812)

16 mm Focal Length:

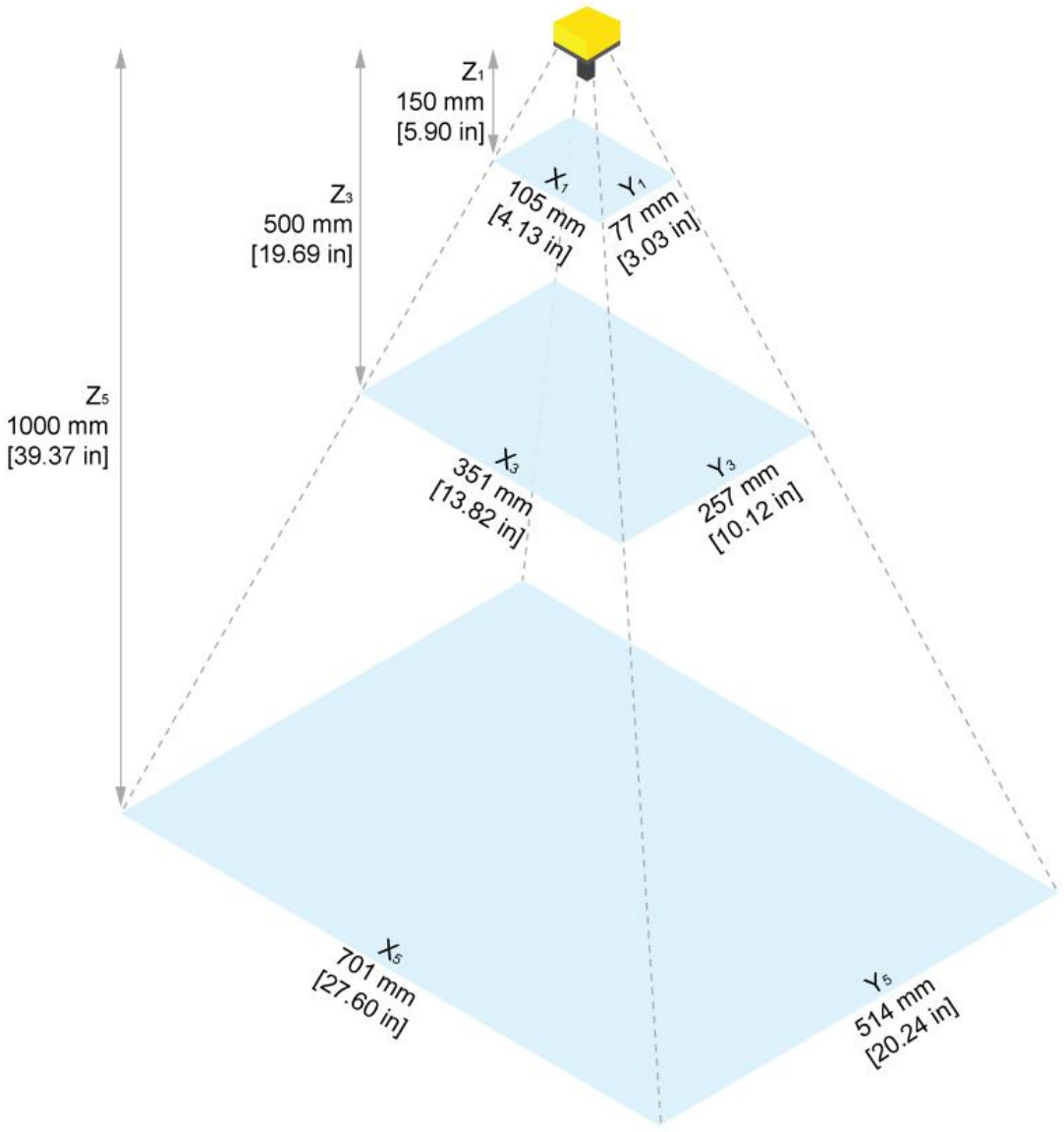

Working Distance	Horizontal Values	Vertical Values	Diagonal Values
150 mm [5.90 in]	105 mm [4.13 in]	77 mm [3.03 in]	130 mm [5.12 in]
250 mm [9.84 in]	175 mm [6.89 in]	128 mm [5.03 in]	217 mm [8.54 in]
500 mm [19.69 in]	351 mm [13.82 in]	257 mm [10.12 in]	435 mm [17.13 in]
750 mm [29.53 in]	526 mm [20.70 in]	386 mm [15.20 in]	652 mm [25.67 in]
1000 mm [78.74 in]	701 mm [27.60 in]	514 mm [20.24 in]	869 mm [34.21 in]

25 mm Focal Length:

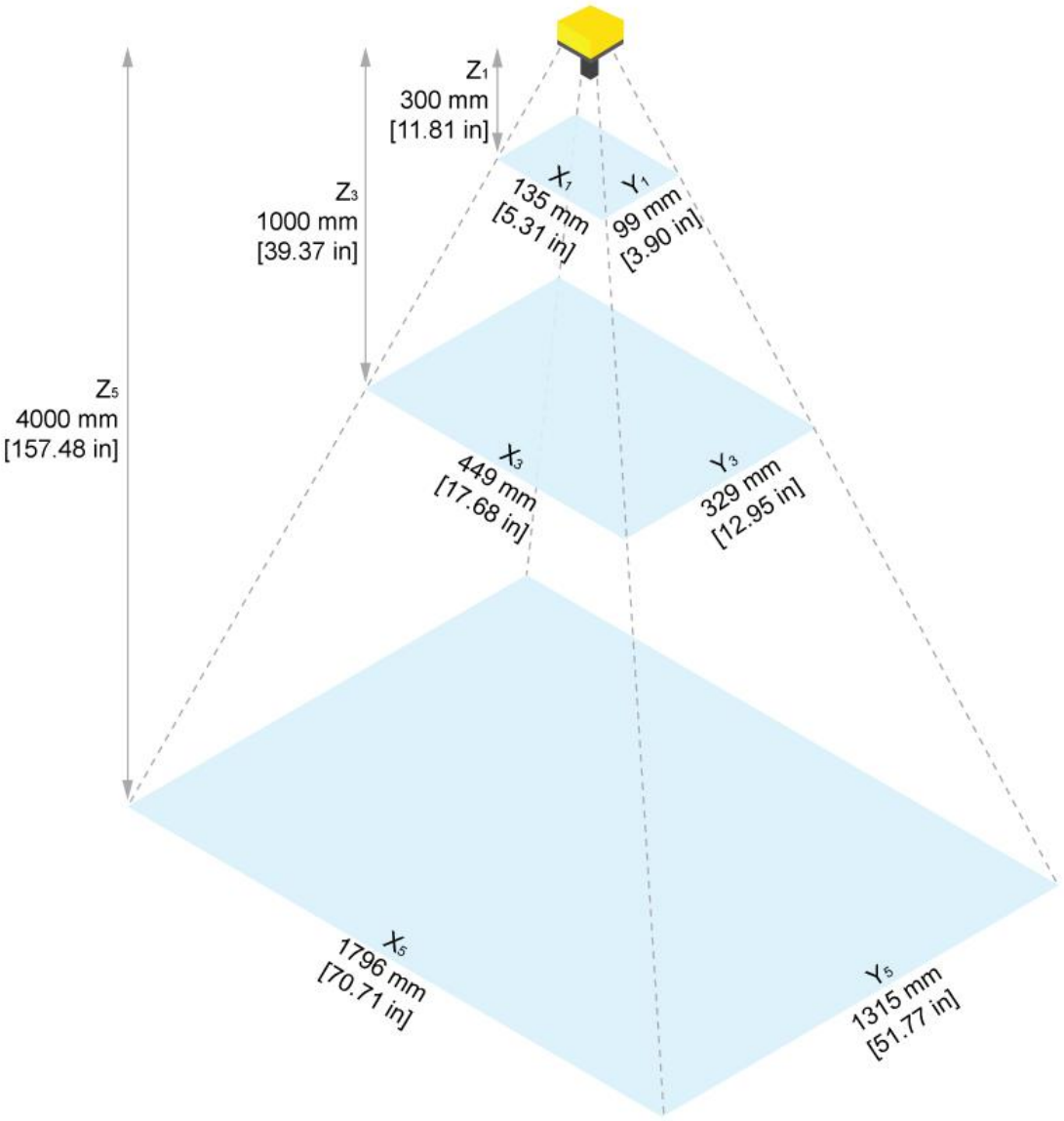

Working Distance	Horizontal Values	Vertical Values	Diagonal Values
300 mm [11.81 in]	135 mm [5.31 in]	99 mm [3.90 in]	167 mm [6.57 in]
500 mm [19.69 in]	225 mm [8.86 in]	165 mm [6.50 in]	279 mm [10.98 in]
1000 mm [39.37 in]	449 mm [17.68 in]	329 mm [12.95 in]	557 mm [21.93 in]
2000 mm [78.74 in]	898 mm [35.35 in]	658 mm [25.91 in]	1113 mm [43.82 in]
4000 mm [157.48 in]	1796 mm [70.71 in]	1315 mm [51.77 in]	2226 mm [87.64 in]

35 mm Focal Length:

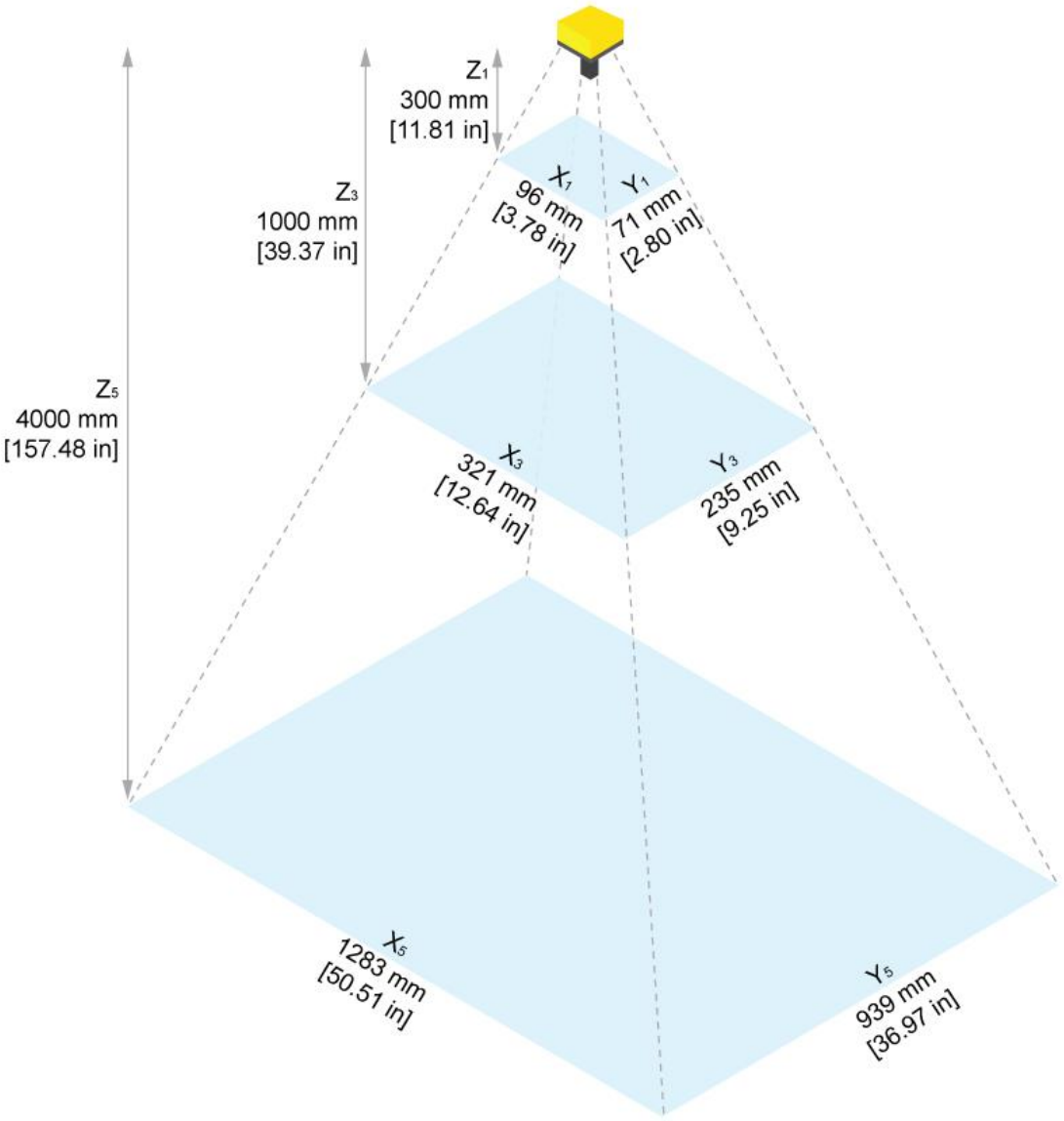

Working Distance	Horizontal Values in mm	Vertical Values in mm	Diagonal Values in mm
300 mm [11.81 in]	96 mm [3.78 in]	71 mm [2.80 in]	119 mm [4.69 in]
500 mm [19.69 in]	160 mm [6.30 in]	118 mm [4.65 in]	199 mm [7.83 in]
1000 mm [39.37 in]	321 mm [12.64 in]	235 mm [9.25 in]	398 mm [15.67 in]
2000 mm [78.74 in]	642 mm [25.28 in]	470 mm [18.50 in]	796 mm [31.34 in]
4000 mm [157.48 in]	1283 mm [50.51 in]	939 mm [36.97 in]	1590 mm [62.60 in]

In-Sight 3800 FoV values with 16 MP Sensor (IS3816)

16 mm Focal Length:

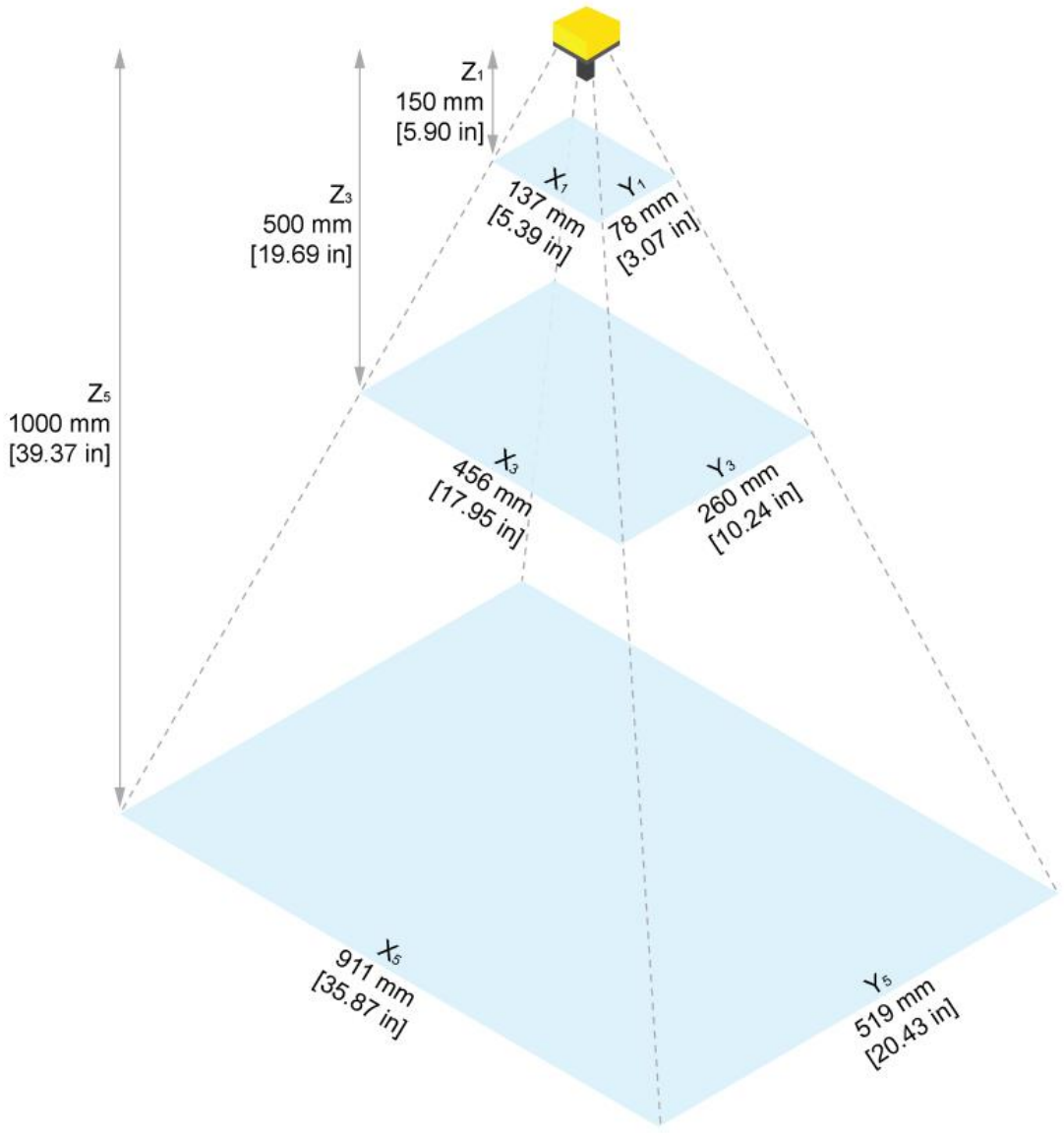

Working Distance	Horizontal Values	Vertical Values	Diagonal Values
150 mm [5.90 in]	137 mm [5.39 in]	78 mm [3.07 in]	158 mm [62.20 in]
250 mm [9.84 in]	228 mm [8.98 in]	130 mm [5.12 in]	262 mm [10.31 in]
500 mm [19.69 in]	456 mm [17.95 in]	260 mm [10.24 in]	525 mm [20.67 in]
750 mm [29.53 in]	684 mm [26.93 in]	390 mm [15.35 in]	787 mm [30.98 in]
1000 mm [78.74 in]	911 mm [35.87 in]	519 mm [20.43 in]	1048 mm [41.26 in]

25 mm Focal Length:

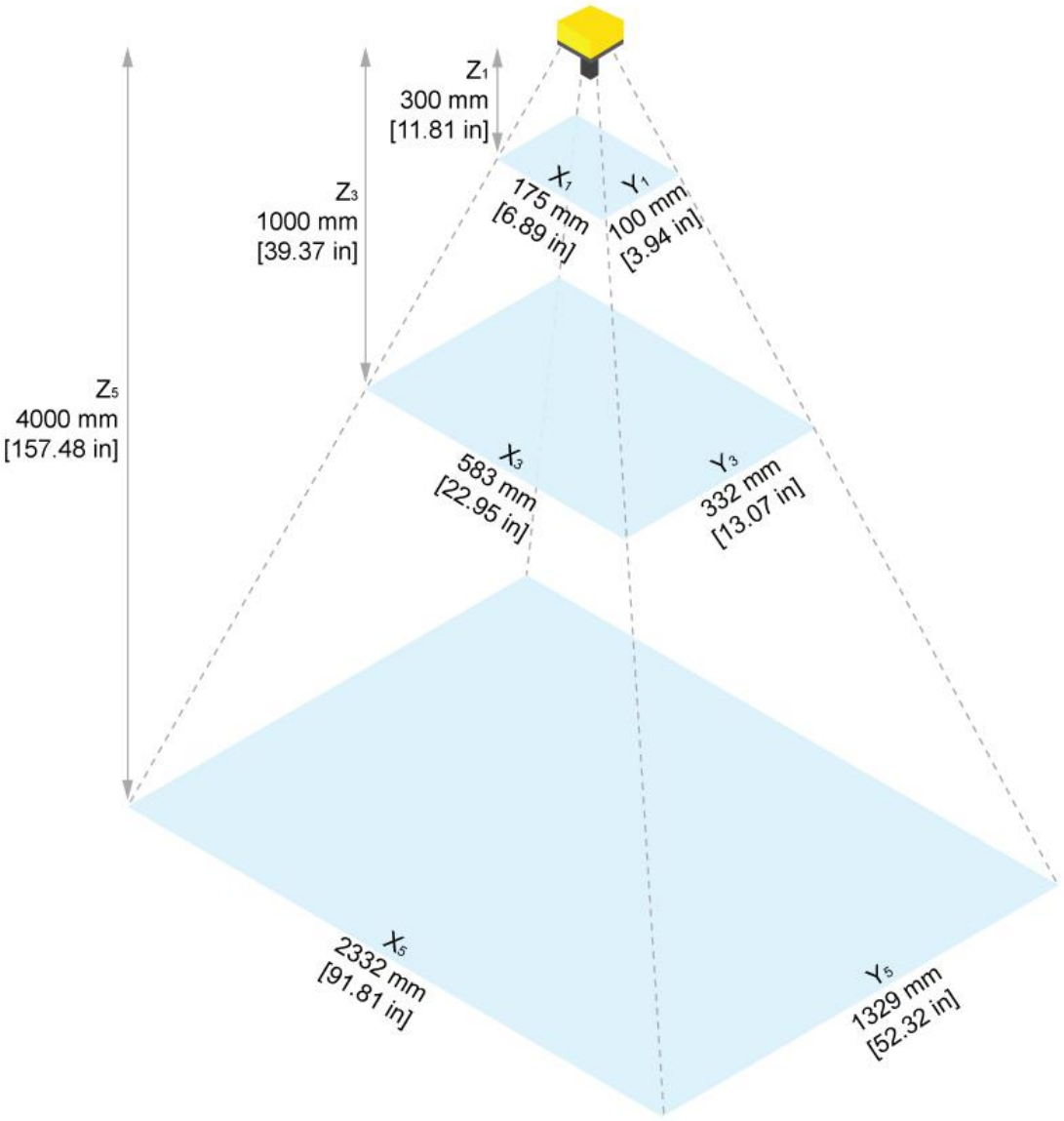

Working Distance	Horizontal Values	Vertical Values	Diagonal Values
300 mm [11.81 in]	175 mm [6.89 in]	100 mm [3.94 in]	202 mm [7.95 in]
500 mm [19.69 in]	292 mm [11.50 in]	167 mm [6.57 in]	336 mm [13.23 in]
1000 mm [39.37 in]	583 mm [22.95 in]	332 mm [13.07 in]	671 mm [26.42 in]
2000 mm [78.74 in]	1166 mm [45.91 in]	664 mm [26.14 in]	1342 mm [52.83 in]
4000 mm [157.48 in]	2332 mm [91.81 in]	1329 mm [52.32 in]	2684 mm [105.67 in]

35 mm Focal Length:

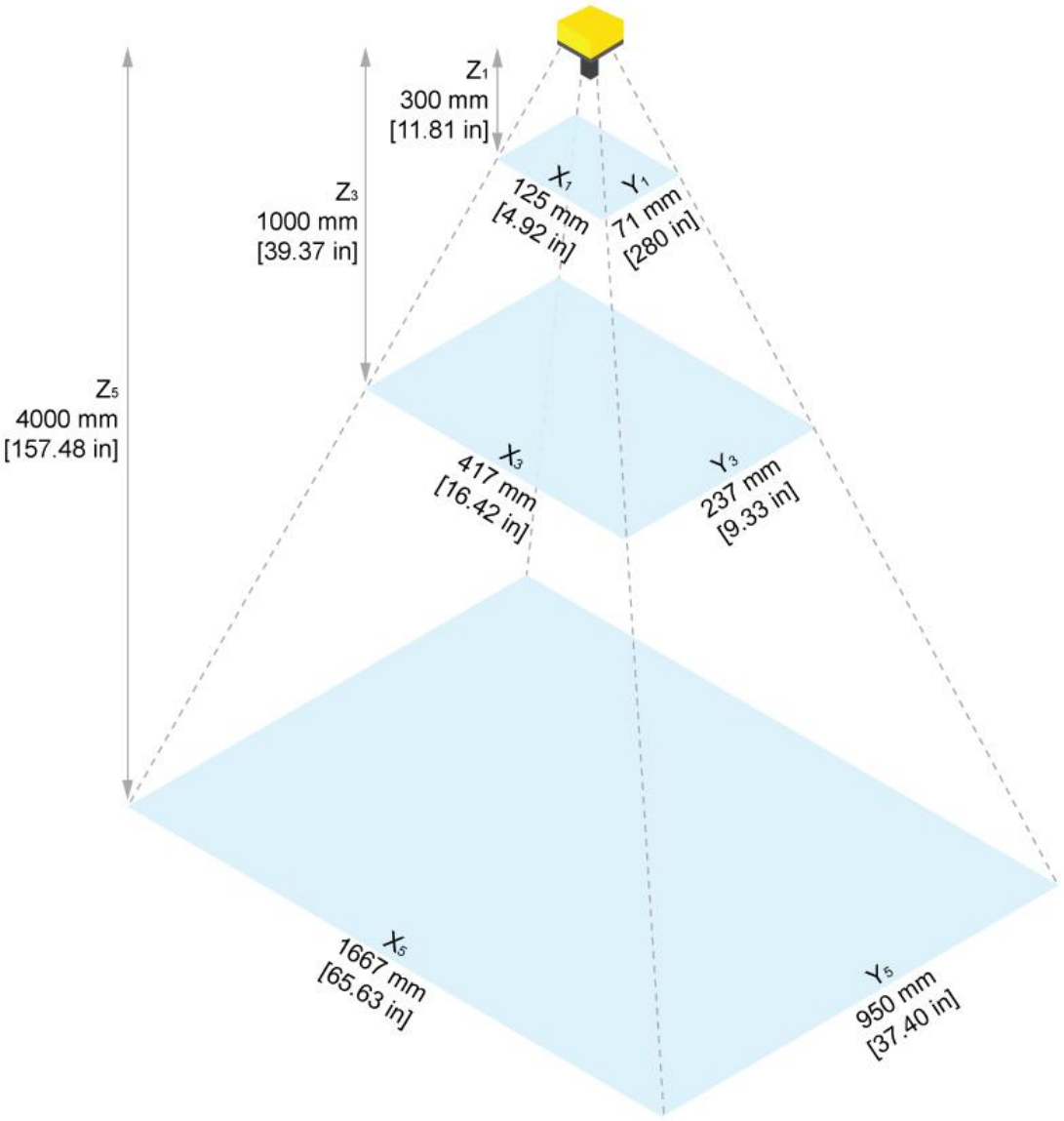

Working Distance	Horizontal Values in mm	Vertical Values in mm	Diagonal Values in mm
300 mm [11.81 in]	125 mm [4.92 in]	71 mm [2.80 in]	144 mm [5.67 in]
500 mm [19.69 in]	208 mm [8.19 in]	118 mm [4.65 in]	239 mm [9.41 in]
1000 mm [39.37 in]	417 mm [16.42 in]	237 mm [9.33 in]	480 mm [18.90 in]
2000 mm [78.74 in]	834 mm [32.83 in]	474 mm [18.66 in]	959 mm [37.76 in]
4000 mm [157.48 in]	1667 mm [65.63 in]	950 mm [37.40 in]	1919 mm [75.55 in]

Mounting the Vision System

The vision system provides mounting holes for attachment to a mounting surface.

CAUTION: The vision system has to be grounded, either by mounting the vision system to a fixture that is electrically grounded or by attaching a wire from the mounting fixture of the vision system to frame ground or Earth ground. If a ground wire is used, it has to be attached to one of the mounting points on the bottom plate of the vision system and not to the mounting points on the front of the vision system.

Mounting Bracket (BKT-INS-01)

1. Align the mounting bracket with the mounting holes on the vision system. If using the M3 mounting holes, you can attach the mounting bracket in either orientation.
2. Insert the M3 screws into the mounting holes and tighten. The maximum torque is 0.90 Nm (8 in-lb).

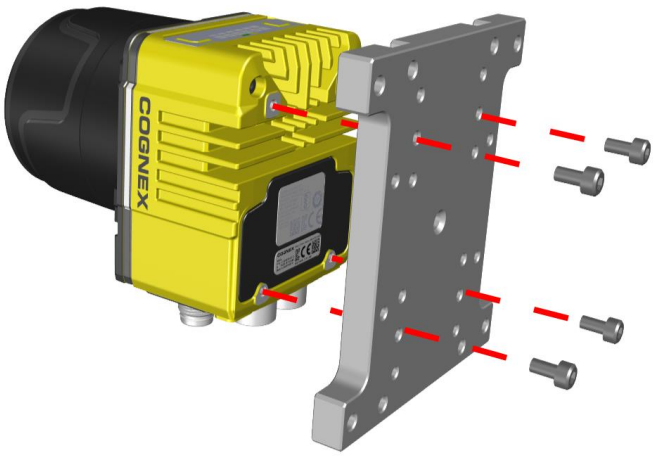

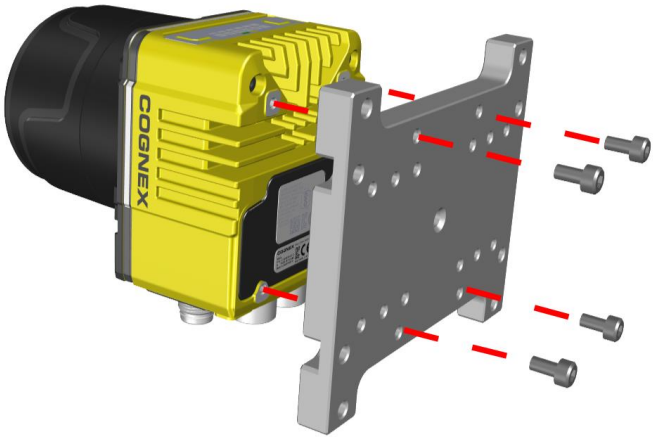

Converter Mounting Bracket (ISB-7000-7K)

1. Align the converter mounting bracket with the mounting holes on the vision system.
2. Insert the M3 screws into the mounting holes and use a 2.5 mm hex wrench to tighten. The maximum torque is 0.90 Nm (8 in-lb).

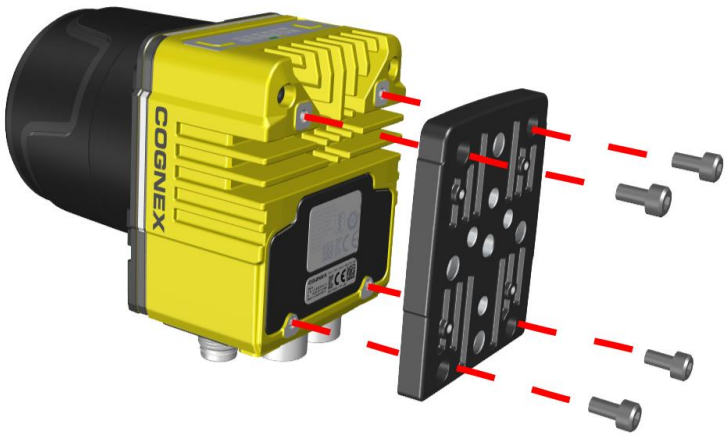

Converter Mounting Bracket (ISB-7000-5K)

1. Align the converter mounting bracket with the mounting holes on the vision system.
2. Insert the Phillips flat head screws into the mounting holes and tighten. The maximum torque is 0.56 Nm (5 in-lb).

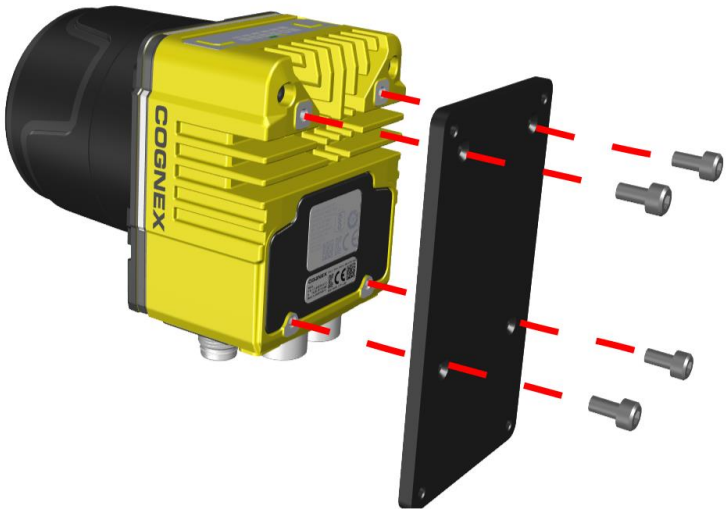

Connection Options

This section summarizes connection options.

Connecting the Ethernet Cable

CAUTION: The Ethernet cable shield has to be grounded at the far end. If the far end device is not grounded, add a ground wire in compliance with local electrical codes. The cable is typically plugged into a switch or router, which has to have a grounded Ethernet connector. Use a digital voltmeter to validate the grounding.

1. Connect the M12 connector of the Ethernet cable to the green ENET0 connector of the vision system.
2. Connect the RJ-45 connector of the Ethernet cable to a switch, router, or PC.

Connecting the Power and I/O Breakout Cable

CAUTION: To reduce emissions, connect the far end of the Breakout cable shield to frame ground.

Note:

- Perform wiring or adjustments to I/O devices when the vision system is not receiving power.
- You can clip unused wires short or use a tie made of non-conductive material to tie them back. Keep bare wires separated from the +24 V DC wire.

1. Verify that the 24 V DC power supply is unplugged and not receiving power.
2. Attach the +24 V DC connector of the Power and I/O Breakout cable and Ground wires to the corresponding terminals on the power supply. For more information, see *Specifications* on page 58.
3. Attach the M12 connector of the Power and I/O Breakout Cable to the 24 V DC connector of the vision system.
4. Restore power to the 24 V DC power supply and turn it on if necessary.

Installing Lenses and Lighting

Installing the Bandpass Filter

1. Attach the back of the adapter to the sensor.

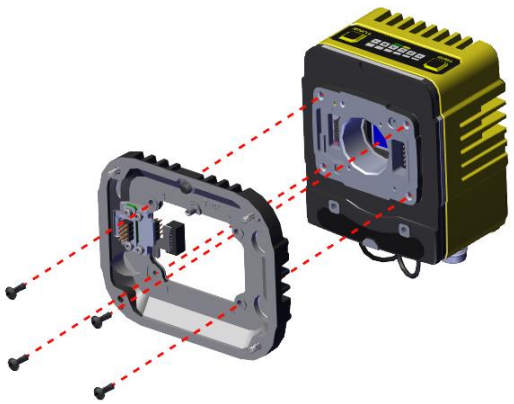

2. Insert the lens and tighten the two captive screws.



3. Attach the front of the adapter to the sensor.

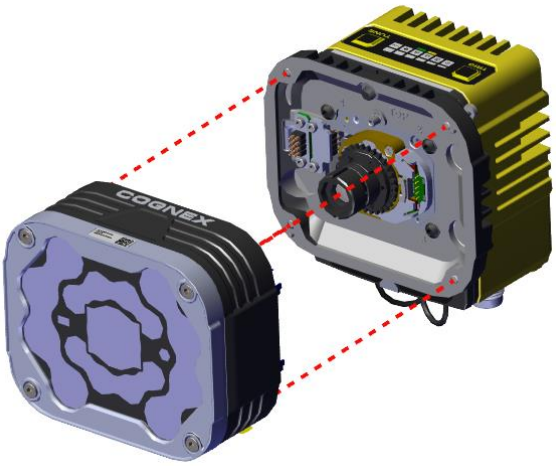

Note:
Observing the tightening sequence below, tighten all four screws to 0.5 Nm using a torque wrench.

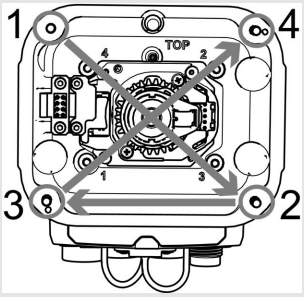

4. Remove the front cover of the adapter.

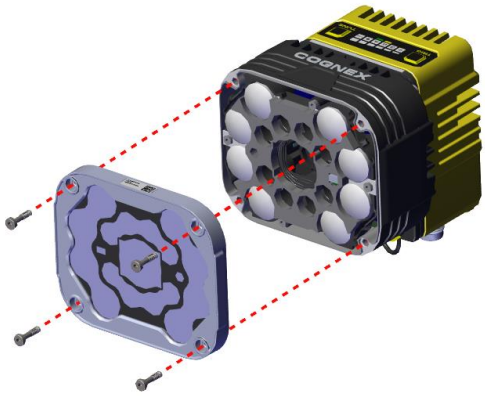

5. Insert the bandpass filter into the sensor.

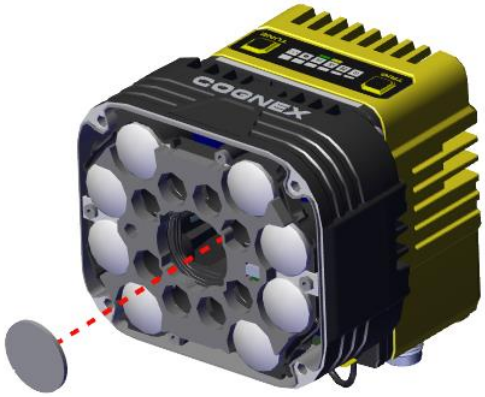

6. Replace the front cover of the adapter.

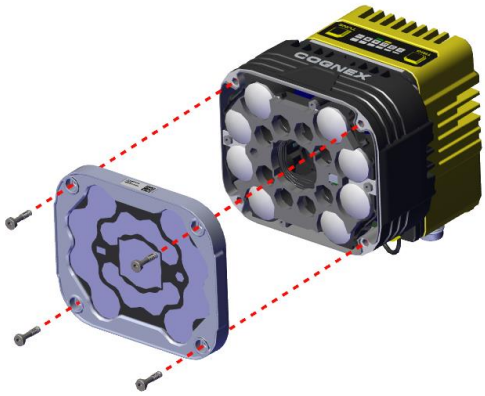

Installing Lenses with Multi Torch

This procedure is valid for both the High Speed Liquid Lens and the Manual Lens installations.

1. Remove the adapter from the sensor.

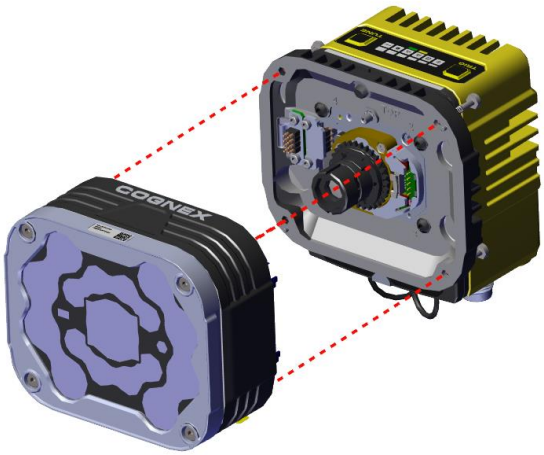

2. Unscrew the two captive screws holding the lens.

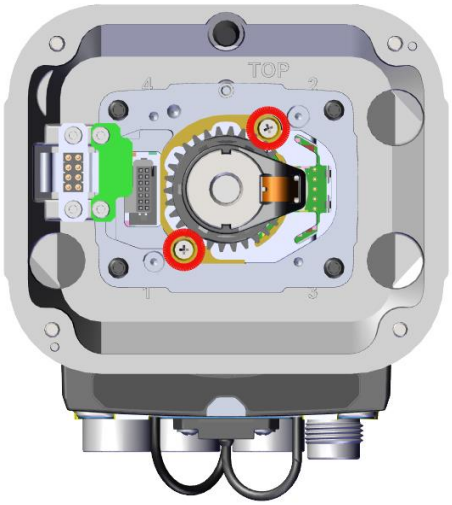

3. Remove the lens from the sensor.



Note: When swapping the lens out, make sure not to pull on the lens itself but on the housing of the lens.

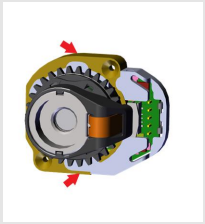

4. Insert the new lens and tighten the two captive screws.



5. Tighten one of the M2 x 8 mm screws halfway, then tighten the other M2 x 8 mm screw halfway. Incrementally tighten each screw to 0.34 Nm using a torque wrench.

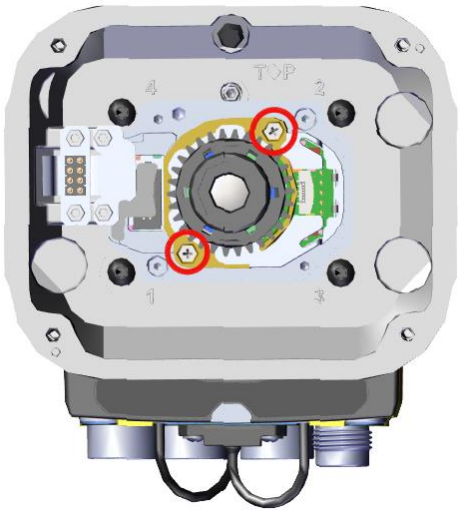

6. Replace the adapter on the sensor.

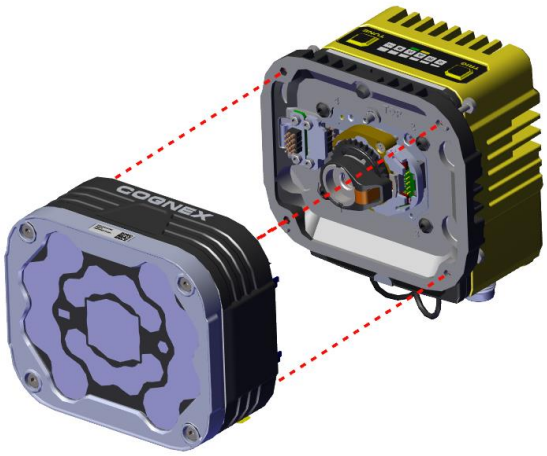

Note:
Observing the tightening sequence below, tighten all four screws to 0.5 Nm using a torque wrench.

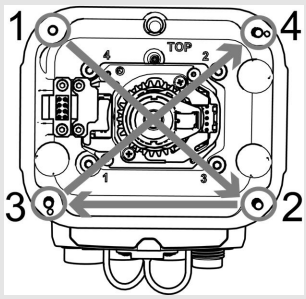

Attaching Lens Cover

Note: The same instructions apply to the 45 mm, 60 mm, and 75 mm lens covers.

1. Place the base of the lens cover on the reader and screw it in. The recommended torque is 0.5 Nm.





2. Attach the top part and turn it clockwise until it latches on the base.



Installing High Speed Liquid Lens with Torch-HR

1. Snap the cable into the vision system. Connect the side with the black cover to the vision system, and connect the side with the 2D code to the Torch-HR.

   Note: Use caution when installing the cable.



2. Screw in the four screws to attach the lens to the vision system.

   Note: When using a C-mount lens, screw the lens into the C-mount threads instead of attaching the liquid lens. The illumination module installation is the same.



3. Bend the other end of the cable and feed the cable through the back of the illumination module.

   Note: Only snap the cable into place after you have completely attached the vision system to the illumination module with the screws. Otherwise, the cable can break.

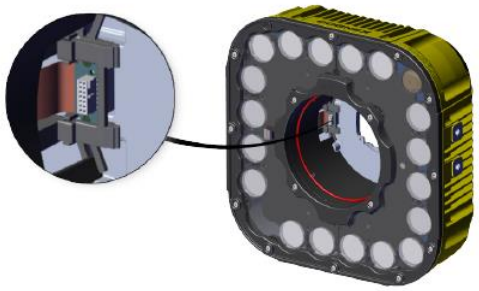

4. Screw in the four screws from the illumination module into the vision system. Tighten each screw to 0.75 Nm.

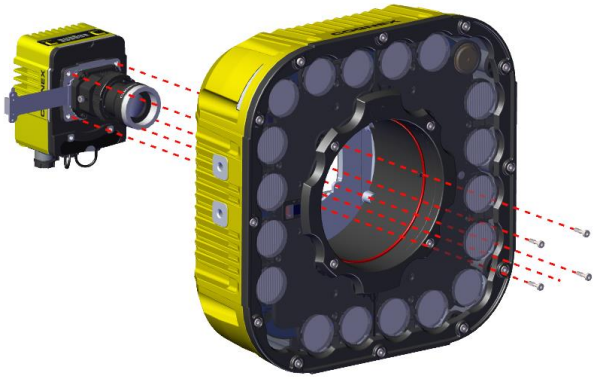

5. Snap the cable into place in the illumination module.
6. Align the slots in the cover with the illumination module. Twist slightly to lock the cover in.

Note: You can remove the lens cover at any time by twisting in the opposite direction. Removing the lens cover allows for access to the lens or installing a new lens without disassembling the Torch-HR.

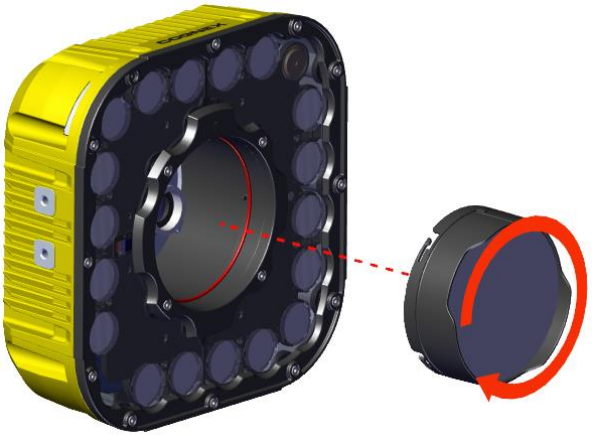

Remove the Illumination Accessory PCB

If the illumination accessory (380-TORCH-MULTI-AF or 380-TORCH-MULTI-MF) must be uninstalled from the vision system, complete the following steps to safely remove the PCB and avoid damage to the vision system.

CAUTION: Do not hot-plug the illumination accessory. Verify that the vision system is not receiving power when you connect or disconnect the illumination accessory. Failure to remove power during this procedure may result in damage to the vision system, or the illumination accessory, or both.

1. Remove power from the vision system.
2. Use a 2 mm hex wrench to remove the four spacer screws. Remove the spacer.

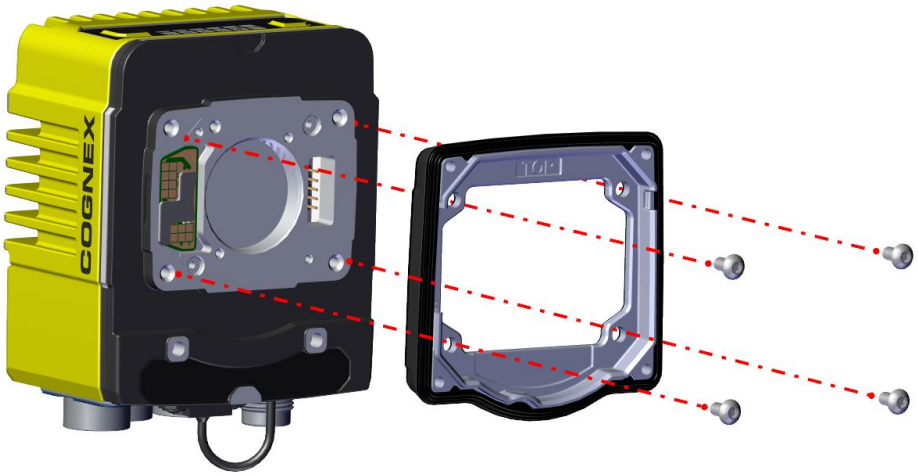

3. The vision system faceplate includes two lift points on either side of the PCB. Position an insulated extractor tool, for example, Jonard Tools S-340 DIP/IC Extractor, under the edges of the PCB.

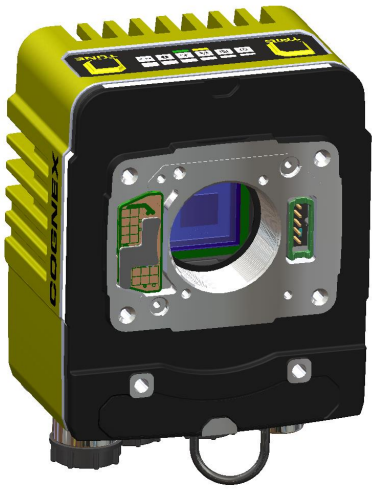

4. Once the extractor is engaged under the edges of the PCB, gently pull upward to disengage the PCB from the internal connector and remove the PCB.

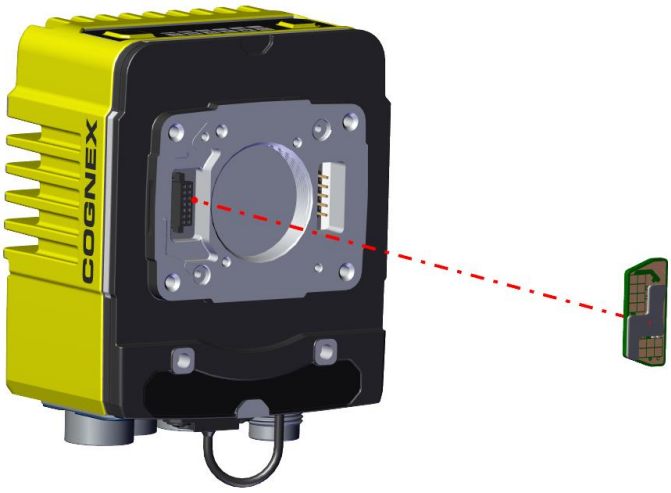

5. Verify the removal process did not damage mating components.

Indicator LEDs

The table summarizes the functions of the indicator LEDs on In-Sight 3800 vision systems.

Indicator	Color/Status	Meaning
Ring LED indicator	GREEN, blinking	The Ring LED indicators blink in GREEN when the vision system produces a pass result. **Note**: In case of a pass result, the Pass/Fail indicator LED is also blinking in GREEN.
	RED, blinking	The Ring LED indicators blink in RED when the vision system produces a fail result. **Note**: In case of a fail result, the Pass/Fail indicator LED is also blinking in RED.
	WHITE	The Ring LED indicators are WHITE when you trigger the Identify function in In-Sight Vision Suite.
Power LED indicator	ON	The vision system is ON.
	OFF	The vision system is OFF.
Train/Trigger status LED indicator	ON	If the vision system has a trained code, this LED is GREEN.
	OFF	If the vision system has no trained code, this LED is OFF.
Pass/Fail LED indicator	GREEN, blinking	The vision system produces a pass result. **Note**: In case of a pass result, the Ring LED indicators are also blinking in GREEN.
	RED, blinking	The vision system produces a fail result. **Note**: In case of a fail result, the Ring LED indicators are also blinking in RED.
Communication LED indicators	ON	The Communication LEDs blink when the vision system detects network traffic. The color of each LED depends on the network speed: • RED: 10 Mbps or below • YELLOW: 10 Mbps to 100 Mbps • GREEN: 1000 Mbps **Note**: The vision system monitors network speed and updates the Communication LED every 50 ms.
	OFF	The LED is OFF when there is no Ethernet connection.
Error	ON	The LED is ON when the In-Sight 3800 vision system detects an error.

Using Your In-Sight Vision System

This section provides information on the installation of the In-Sight Vision Suite, trigger types, and protocols.

Installing the In-Sight Vision Suite

Follow the steps below to install and connect your vision system to the In-Sight Vision Suite.

1. Download the latest version of the In-Sight Vision Suite from support.cognex.com/ and follow the on-screen steps.
2. Connect the 3800 series vision system to your PC.
3. Launch the In-Sight Vision Suite and click **Refresh**.
4. Select a vision system from the list and click **Connect**.

Trigger Types

The In-Sight 3800 vision systems support the following trigger modes:

- **Self**: The vision system acquires an image and runs the job continuously at a time interval you configure.

External Triggers

If you are using external triggering, you can use any of the following methods to trigger your vision system.

- Press the trigger button on the vision system.

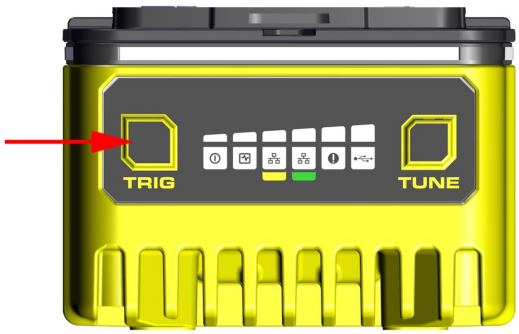

- Send a trigger command over Native Mode.
- Send a trigger through the trigger input line in Spreadsheet.
- Send a trigger through the network using UDP.
- Send a trigger through factory protocols (FFP).
- Send a trigger through the WebHMI trigger button.

Note: You can also initiate external triggering through industrial protocols from a programmable logic controller.

Industrial Protocols

The vision system supports the following industrial protocols:

- EtherNet/IP™, EDS and PLC
- PROFINET (Class B)
- SLMP Protocol
- TCP/IP
- OPC/UA
- FTP

For more information, see **Industrial Communications** in the *In-Sight Spreadsheet Help* documentation.

Specifications

The following sections list general specifications for the vision system.

In-Sight 3800 Series Vision System

Specification	In-Sight 3800
Lens Type	C-Mount, Cognex High Speed Liquid Lens Autofocus, or Cognex manual focus lens (used with Multi-Torch Illumination accessory).
Trigger	1 opto-isolated, acquisition trigger input.
Discrete Inputs	1 opto-isolated, acquisition trigger input. Up to 3 general-purpose inputs when connected to the Breakout cable.
Discrete Outputs	Up to 4 high-speed outputs when connected to the Breakout cable.
Status LEDs	Pass/Fail LED and Indicator Ring, Network LED, and Error LED.
Memory	4 GB
Job / Program Storage	7.2 GB non-volatile flash memory, unlimited storage using remote network device.
Image Processing Memory	Dynamic allocation shared with Job / Program Storage
Network Communication	2 Ethernet ports, 10/100/1000 BaseT with auto MDIX. IEEE 802.3 TCP/IP Protocol. Supports DHCP, static, and link-local IP address configuration. One port supports TSN networks.
Power Consumption	24 V DC ± 10%, 2.0 A maximum.
Power Output	24 V DC at 1.0 A maximum to external light.
Material	Die-cast and extruded aluminum and zinc housing.
Finish	Painted.
Mounting	Four M3 threaded mounting holes. See *Mounting Brackets* on page 14 for supported mounts. Pattern: 38.5 × 58.5 mm (1.52 × 2.60 in)
Weight	In-Sight 3800 with no accessories attached: 570 g (20.10 oz). • with 45 mm plastic C-Mount cover (COV-380-CMNT-45): 625 g (22.0 oz.) - no lens included. • with 60 mm plastic C-Mount cover (COV-380-CMNT-60): 635 g (22.4 oz.) - no lens included. • with 75 mm plastic C-Mount cover (COV-380-CMNT-75): 650 g (22.9 oz.) - no lens included. • with Multi-Torch Illumination, High Speed Liquid Lens (16 mm), and standard front cover: 840 g (29.6 oz.). • with Multi-Torch Illumination, High Speed Liquid Lens (16 mm), and dome attachment: 970 g (34.2 oz.).
Case Temperature	0° C to 40° C (32° F to 104° F)
Storage Temperature	-20° C to 80° C (-4° F to 176° F)
Humidity	< 95% non-condensing

Specification	In-Sight 3800
Protection	IP67 with all cables properly attached (or the provided connector plug installed) and the IP67-rated cover or Multi Torch attachment properly installed.
Shock (Shipping and Storage)	IEC 60068-2-27 - 500 shocks in each polarity of each (X, Y, and Z) axis, 3000 shocks total, semi-sinusoidal, 11 g, 10 ms
Vibration (Shipping and Storage)	IEC 60068-2-6: vibration test in each of the three main axis for 2 hours at 10 Gs (10 to 500 Hz at 100 m/s^2 / 15 mm) with cables or cable plugs and a 150 gram or lighter lens attached.
Regulations/Conformity	CE, FCC, KCC, TÜV SÜD NRTL, EU RoHS, China RoHS

In-Sight 3800 Series Vision System Image Sensor

Specification	IS3801M	IS3801C	IS3803M	IS3803C	IS3805M	IS3805C
Bit Depth	8-bit monochrome	24-bit color	8-bit monochrome	24-bit color	8-bit monochrome	24-bit color
Frames Per Second (Maximum, Full Resolution)	125 FPS	52 FPS	47 FPS	30 FPS	32 FPS	21 FPS
Sensor Type	1/2.3" CMOS, global shutter		1/1.8" CMOS, global shutter		2/3" CMOS, global shutter	
Image Sensor Properties	6.3 mm diagonal, 3.45 × 3.45 µm square pixels		8.9 mm diagonal, 3.45 × 3.45 µm square pixels		11.1 mm diagonal, 3.45 × 3.45 µm square pixels	
Maximum Image Resolution (pixels)	1440 × 1080		2048 × 1536		2448 × 2048	
Electronic Shutter Speed	19.5 µs to 200,000 µs		25.1 µs to 200,000 µs		19.1 µs to 200,000 µs	

Specification	IS3808M	IS3808C	IS3812M	IS3812C	IS3816M	IS3816C
Bit Depth	8-bit monochrome	24-bit color	8-bit monochrome	24-bit color	8-bit monochrome	24-bit color
Frames Per Second (Maximum, Full Resolution)	24	12	22	11	18	8
Sensor Type	2/3" CMOS, global shutter		1/1.1" CMOS, global shutter		1.1" CMOS, global shutter	
Image Sensor Properties	11.1 mm diagonal, 2.74 × 2.74 µm square pixels		14.0 mm diagonal, 2.74 × 2.74 µm square pixels		16.8 mm diagonal, 2.74 x 2.74 µm square pixels	
Maximum Image Resolution (pixels)	2840 × 2840		4096 × 3000		5320 × 3032	
Electronic Shutter Speed	22 µs to 200,000 µs		22 µs to 200,000 µs		29.1 µs to 200,000 µs	

Spectral Response Diagrams

The following diagrams represent the response of the vision system to different wavelengths of light.

In-Sight 3801M:

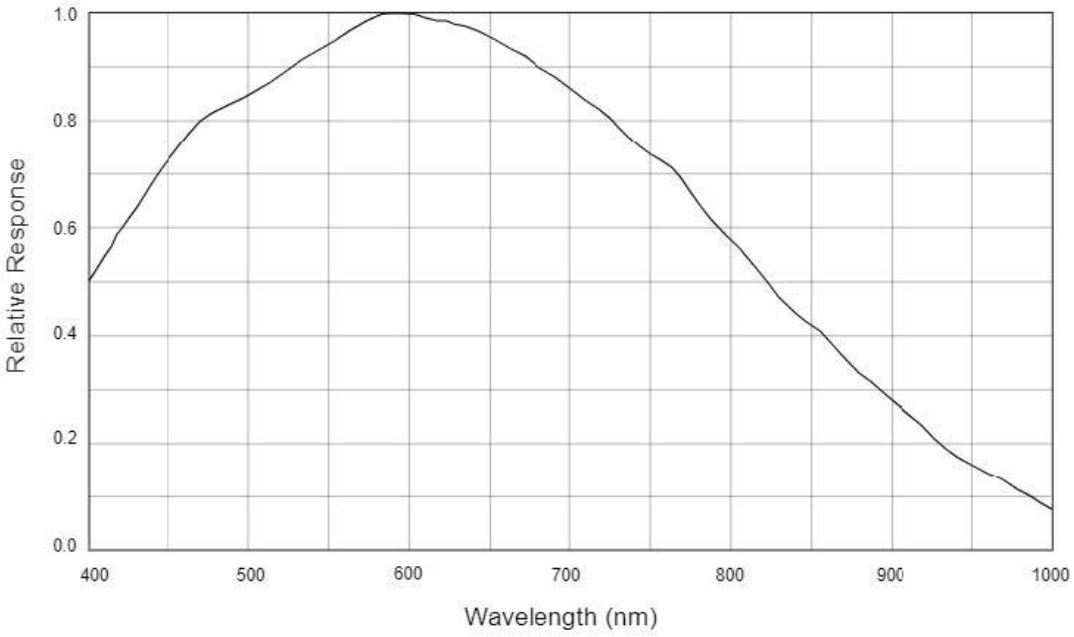

In-Sight 3801C:

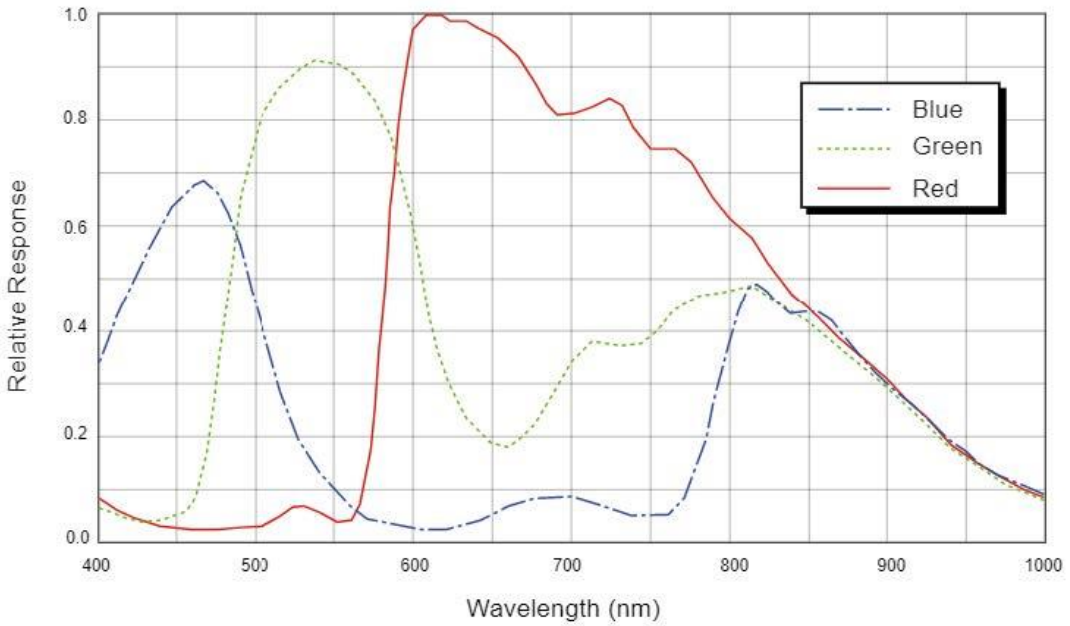

In-Sight 3803M and 3805M:

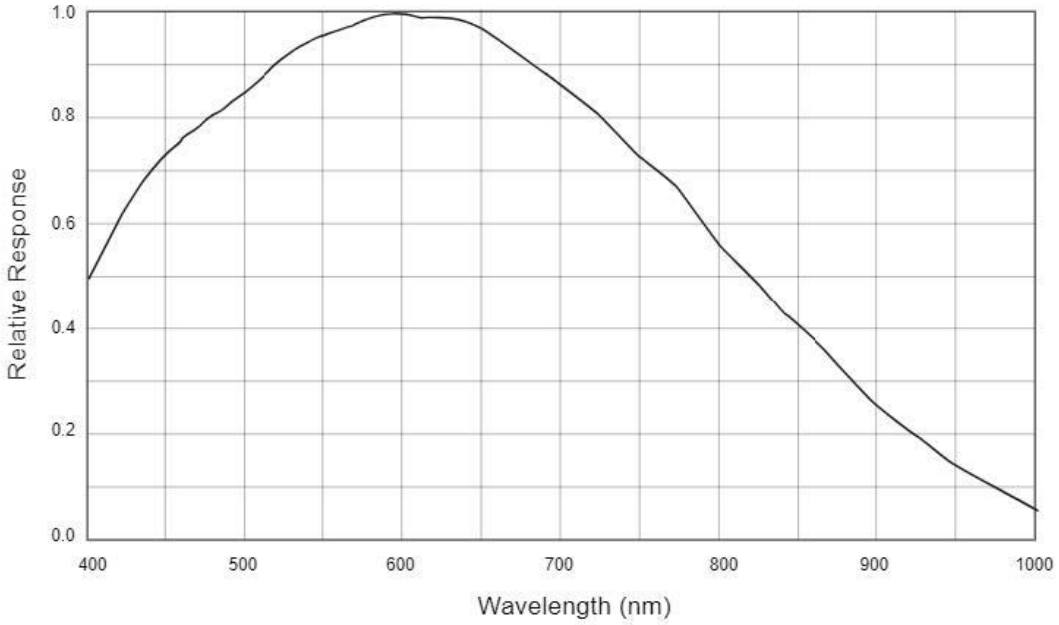

In-Sight 3803C and 3805C:

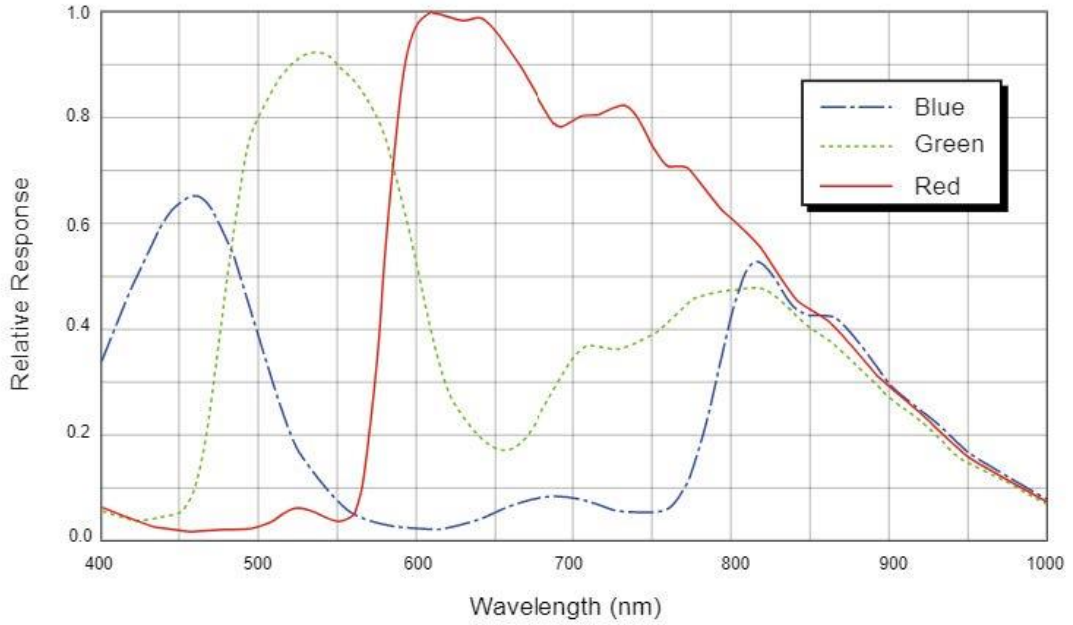

In-Sight 3808M, 3812M, and 3816M:

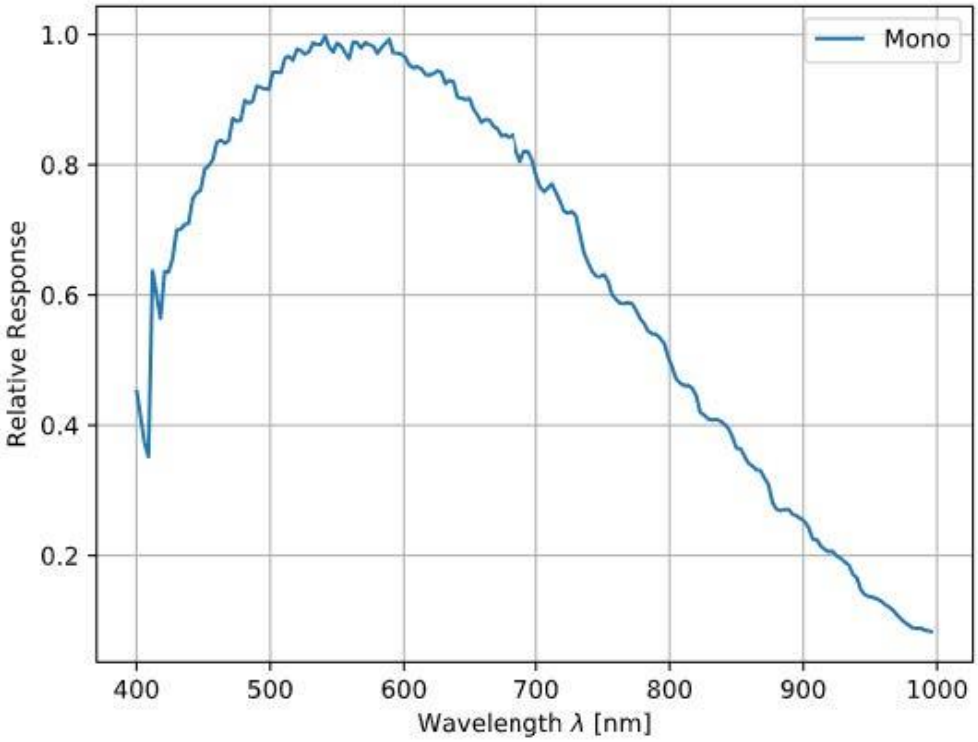

In-Sight 3808C, 3812C, and 3816C:

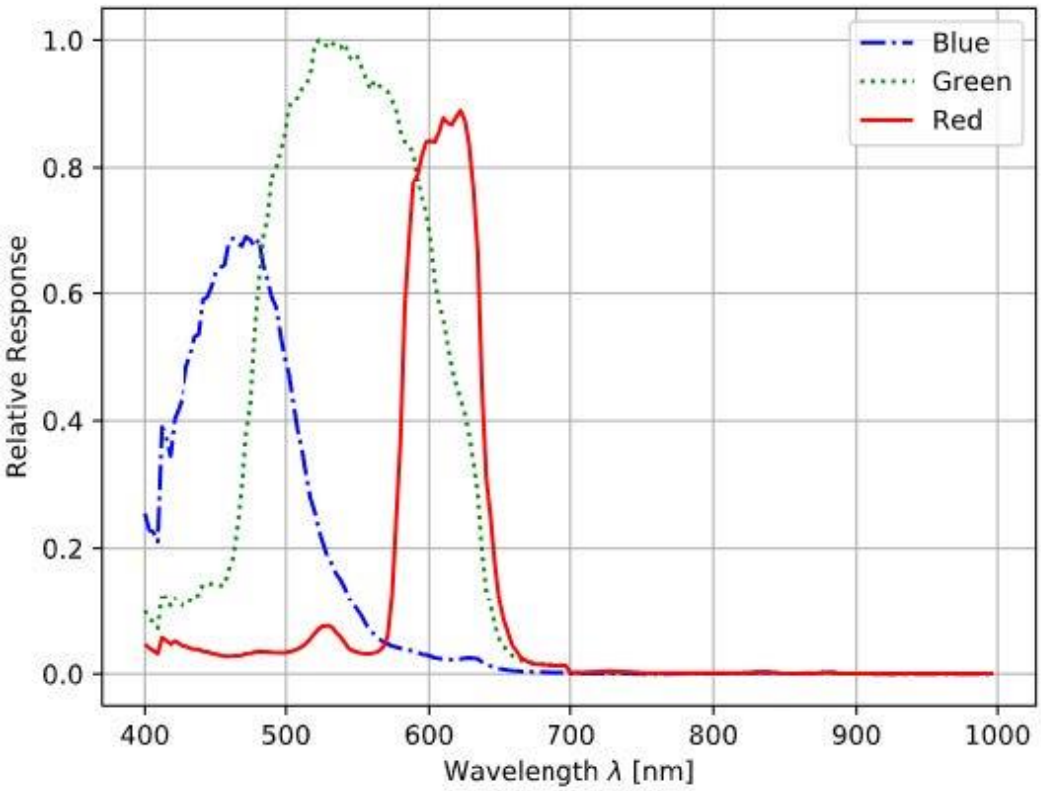

LED Wavelengths

The following table shows LED types and the related peak wavelengths.

Model	LED	Wavelength

In-Sight 3800 with Multi-Torch Illumination	Multicolor	• 453 nm (blue)
		• 525 nm (green)
		• 625 nm (red)
		• Color temperature: 6740 Kelvin (white)
		Chromaticity coordinates acc. to CIE 1931
		  • Cx 0.31 (typ.)
		  • Cy 0.32 (typ.)
		• IR Wavelength: 850 nm
		Note: For color vision systems, select the White option.

Torch-HR Integrated Lights

Variant	Power	Maximum Power Consumption (A)	Maximum Exposure (ms)	Maximum Duty Cycle
Red	Internal	1.22	10	2%
Red	External	2.25	10	6%
White	Internal	1.15	4	1%
White	External	2.3	4	3%

Acquisition Trigger Input

The vision system features one acquisition trigger input, which is optically isolated. You can configure the acquisition trigger input to trigger from an NPN (current sinking) or PNP (current sourcing) device.

Specification	Description
Voltage	ON: 15 to 28 V DC (24 DC nominal) OFF: 0 to 5 V DC (11.5 V DC nominal threshold)
Current (Typical)	ON: 2.6 mA to 4.9 mA from 15 to 28 V Input OFF: <830 µA for < 5 V DC Resistance: ~6 kOhms
Delay	24 µs maximum latency between leading edge of trigger and start of aquisition. Input pulse should be a minimum of 1 ms wide.

- To trigger from an NPN type photoelectric sensor or PLC output, connect COMMON IN to +24 VDC and connect IN 0 to the output of the photoelectric sensor. When the output turns ON, it pulls TRIGGER down to 0 VDC, turning the opto-coupler ON.
- To trigger from a PNP photoelectric sensor or PLC output, connect IN 0 to the output of the photoelectric sensor and connect COMMON IN to 0 VDC. When the output turns ON, it pulls TRIGGER up to +24 VDC, turning the opto-coupler ON.

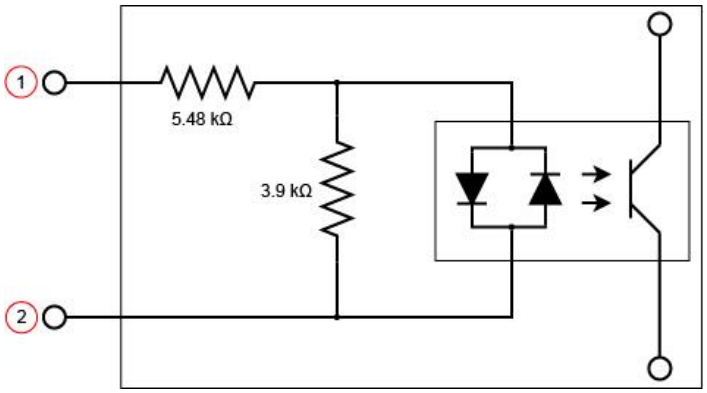

Number	Input
1	IN 0
2	COMMON IN

High-Speed Outputs

Specification	Description
Voltages	V_{MAX}: 26 VDC through external load V_{OL}: ≤ ± 3 V @ 50 mA
Current	I_{MAX}: 50 mA maximum sink or source current
	Each line is protected against over-current, short circuits and transients from switching inductive loads. High current inductive loads require an external protection diode.

For NPN lines, the external load should be connected between the output and the positive supply voltage (< 26 VDC). The output pulls down to less than 3 VDC when ON, which causes current to flow through the load. When the output is OFF, no current flows through the load.

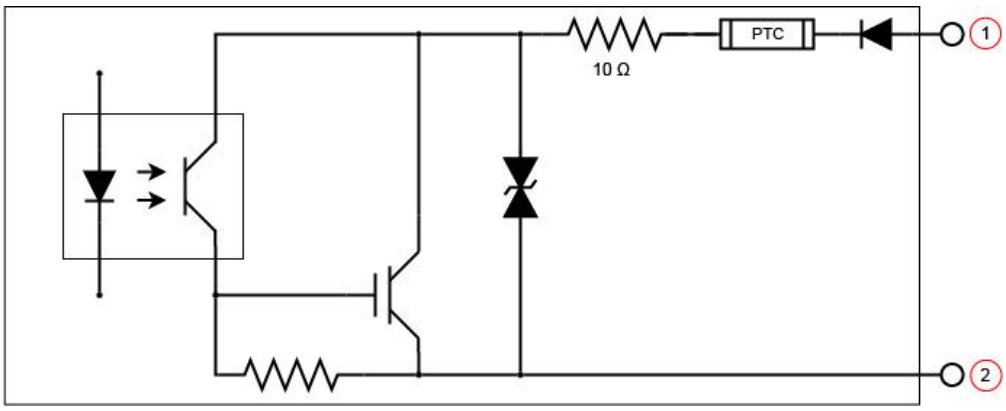

Number	Output
1	NPN OUT
2	COMMON OUT

For PNP lines, the external load should be connected between the output and the negative supply voltage (0 VDC). When connected to a 24 VDC power supply, the output pulls up greater than 21 VDC when ON, and current flows through the load. When the output is OFF, no current flows through the load.

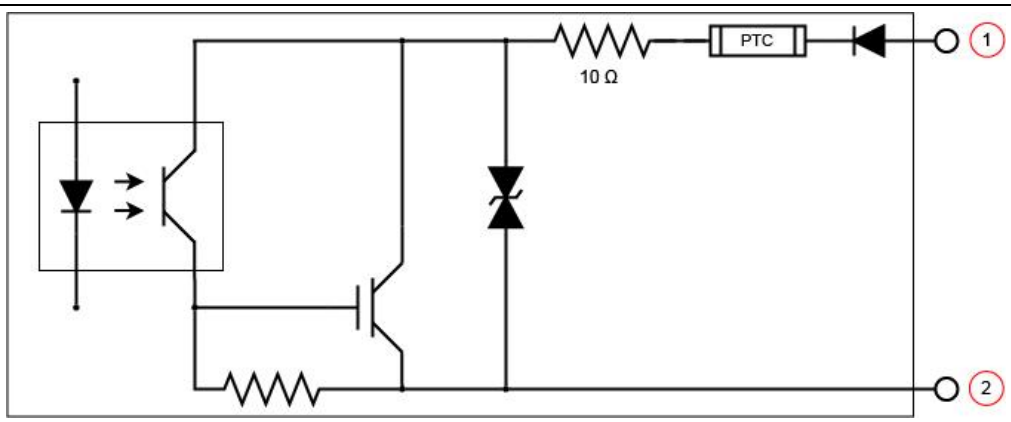

Number	Output
1	COMMON OUT
2	PNP OUT

Ethernet Cable

The Ethernet cable provides Ethernet connectivity to the vision system. The Ethernet cable is used to connect the vision system to other network devices.

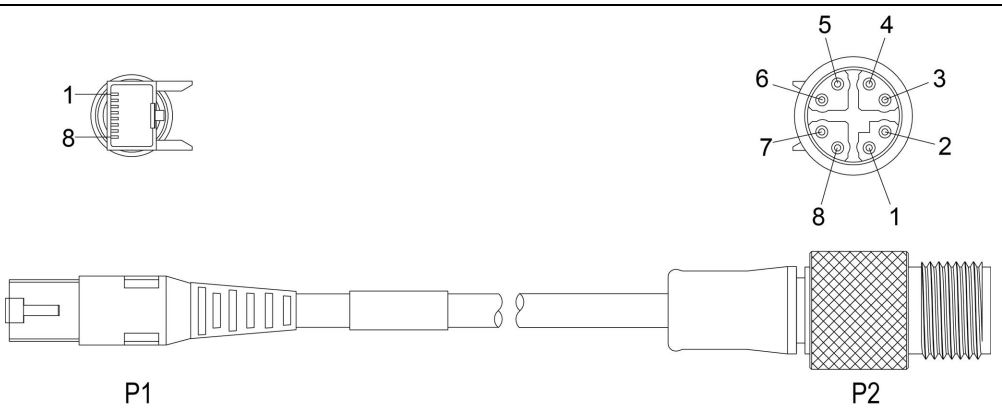

P1 Pin Number	Wire Color	Signal Name	P2 Pin Number
1	White/Orange	TxRx A +	1
2	Orange	TxRx A -	2
3	White/Green	TxRx B +	3
4	Blue	TxRx C +	8
5	White/Blue	TxRx C -	7
6	Green	TxRx B -	4
7	White/Brown	TxRx D +	5
8	Brown	TxRx D -	6

CAUTION: The Ethernet cable shield has to be grounded at the far end. Whatever this cable is plugged into (typically a switch or router) should have a grounded Ethernet connector. A digital voltmeter has to be used to validate the grounding. If the far end device is not grounded, a ground wire should be added in compliance with local electrical codes.

Note:

- Cables are sold separately.
- The wiring for this cable follows standard industrial Ethernet M12 specifications. It differs from the 568B standard.

External Light Connector

The LIGHT connector of the vision system is used to connect the External Light cable to an external lighting device, providing power and strobe control. You can connect the External Light cable to either a continuous or strobed lighting device. Before using an external lighting device, you must configure the light settings within In-Sight Vision Suite. For more information, refer to the *In-Sight Spreadsheet Help* documentation.

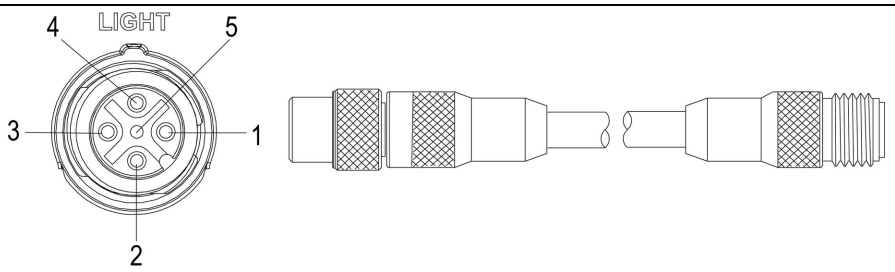

Pin#	Signal Name	Wire Color
1	+24 V DC	Brown
2	Intensity Control	White
3	GND	Blue
4	Strobe	Black
5	Chassis	Not Connected

Note:

- Cables are sold separately.
- Current load: 1 A maximum, 750 mA average.
- Intensity Control is an analog signal that ranges from 0 to +10 V DC, and is configurable within In-Sight Vision Suite. It is a control signal only, and must not be used to power an external device. Power must be sourced from +24 V DC and GND. Verify the External Light cable and light support intensity control.
- The Strobe output is active low 0 V DC and active high +12 V DC, with the Polarity configurable within In-Sight Vision Suite. It is a control signal only and cannot be used for power. Power must be sourced from +24 V DC and GND.

CAUTION:
Connecting an analog light while the **Cognex Ecosystem Smart Light (24V Digital)** mode is enabled in In-Sight Vision Suite can cause hardware damage to the vision system or the light. Analog lights support intensity in the range of 0 – 10 V, and smart lights support intensity in the range of 0 – 24 V.

To avoid hardware damage, ensure that the type of light connected to the vision system (analog light or smart light) matches the light setting in the **Light Port Configuration** in In-Sight Vision Suite in the **Camera Configuration** utility.

Breakout Cable

The Breakout cable provides connections to an external power supply, the acquisition trigger input, general-purpose inputs, high-speed outputs, and RS-232 serial communications. The Breakout cable is not terminated.

The Breakout cable can be connected to devices, such as a trigger sensor or strobe light. The Breakout cable is not terminated.

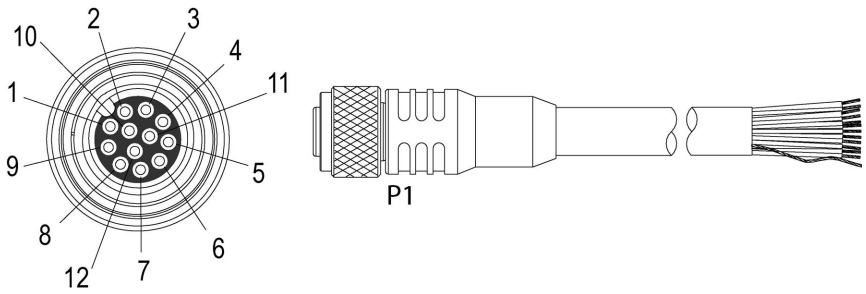

Pin#	Signal Names	Wire Color
1	IN 2 / HSOUT 2	Yellow
2	RS-232 TRANSMIT	White/Yellow
3	RS-232 RECEIVE	Brown
4	IN 3 / HSOUT 3	White/Brown
5	IN 1	Violet
6	COMMON IN	White/Violet
7	+24VDC	Red
8	GND	Black
9	COMMON OUT	Green
10	TRIGGER	Orange
11	HSOUT 0	Blue
12	HSOUT 1	Grey

Note:

- Cables are sold separately.
- Perform wiring or adjustments to I/O devices when the vision system is not receiving power.
- You can cut exposed wires short or trim wire ends. You also can tie the wires back if you use a tie made of non-conductive material. Keep bare wires separated from the +24 V DC wire.
- When using the 15 meter Breakout cable, full 24 V DC voltage must be maintained at the input leads of the Breakout cable when the vision system is operating.

Cleaning and Maintenance

Clean the Housing

To clean the outside of the vision system housing, use a small amount of mild detergent cleaner or isopropyl alcohol on a cleaning cloth. Do not pour the cleaner on the vision system housing.

⚠ CAUTION: Do not attempt to clean any In-Sight product with harsh or corrosive solvents, including lye, methyl ethyl ketone (MEK) or gasoline.

Clean the Vision System Image Sensor Window

To remove dust from the outside of the image sensor window, use a pressurized air duster. The air must be free of oil, moisture or other contaminants that could remain on the glass and possibly degrade the image. Do not touch the glass window. If oil or smudges remain, use a cotton bud and alcohol (ethyl, methyl, or isopropyl) to clean the window. Do not pour the alcohol on the window.

Clean the Vision System Lens Cover

To remove dust from the lens cover, use a pressurized air duster. The air must be free of oil, moisture or other contaminants that could remain on the lens cover. To clean the plastic window of the lens cover, use a small amount of isopropyl alcohol on a cleaning cloth. Do not scratch the plastic window. Do not pour the alcohol on the plastic window.

Regulations and Conformity

Note: For the most current CE and UKCA declaration and regulatory conformity information, see the Cognex support site: cognex.com/support.

In-Sight 3800 vision systems have the Regulatory Model number 50103 and meet or exceed the requirements of all applicable standards organizations for safe operation. However, as with any electrical equipment, the best way to ensure safe operation is to operate them according to the agency guidelines that follow. Please read these guidelines carefully before using your device.

Safety and Regulatory	
Manufacturer	Cognex Corporation One Vision Drive Natick, MA 01760 USA
CE	In-Sight 3800 1.6 MP, 3 MP, 5 MP: Regulatory Model 50103 This is a class A product. In a domestic environment this product may cause radio interference in which case the user may be required to take immediate measures. This equipment complies with the essential requirements of the EU Directive 2014/30/EU. Declarations are available from your local representative.
EU RoHS	Compliant to the most recent applicable directive.
FCC	FCC Part 15, Class A This equipment has been tested and found to comply with the limits for a Class A digital device, pursuant to part 15 of the FCC Rules. These limits are designed to provide reasonable protection against harmful interference when the equipment is operated in a commercial environment. This equipment generates, uses, and can radiate radio frequency energy and, if not installed and used in accordance with the instruction manual, may cause harmful interference to radio communications. Operation of this equipment in a residential area is likely to cause harmful interference in which case the user will be required to correct the interference at his own expense.
Korea KC	This device is certified for office use only and if used at home, there can be frequency interference problems. A급 기기(업무용 방송통신기자재): 이 기기는 업무용(A급) 전자파적합기기로서 판 매자 또는 사용자는 이 점을 주의하시기 바라 며, 가정외의 지역에서 사용하는 것을 목적으 로 합니다. In-Sight 3800 1.6 MP, 3 MP, 5 MP: Regulatory Model 50103
TÜV	In-Sight 3800 1.6 MP, 3 MP, 5 MP: Regulatory Model 50103
	NRTL: TÜV SÜD SCC/NRTL OSHA Scheme for UL/CAN 61010-1.
	CB report available upon request. TÜV SÜD, IEC/EN 61010-1.
UKCA	In-Sight 3800 1.6 MP, 3 MP, 5 MP: Regulatory Model 50103 This is a class A product. In a domestic environment this product may cause radio interference in which case the user may be required to take immediate measures. This equipment complies with the essential requirements of the Electromagnetic Compatibility Regulations 2016. Declarations are available from your local representative.

中国大陆RoHS (Information for China RoHS Compliance)

根据中国大陆《电子信息产品污染控制管理办法》(也称为中国大陆RoHS), 以下部份列出了本产品中可能包含的有毒有害物质或元素的名称和含量。



	Hazardous Substances 有害物质					
Part Name 部件名称	Lead (Pb) 铅	Mercury (Hg) 汞	Cadmium (Cd) 镉	Hexavalent Chromium (Cr (VI)) 六价铬	Polybrominated biphenyls (PBB) 多溴联苯	Polybrominated diphenyl ethers (PBDE) 多溴二苯醚
Regulatory Model 50103	X	O	O	O	O	O

This table is prepared in accordance with the provisions of SJ/T 11364.
这个标签是根据SJ / T 11364 的规定准备的。

O: Indicates that said hazardous substance contained in all of the homogeneous materials for this part is below the limit requirement of GB / T26572 - 2011.
表示本部件所有均质材料中含有的有害物质低于GB / T26572 - 2011 的限量要求。

X: Indicates that said hazardous substance contained in at least one of the homogeneous materials used for this part is above the limit requirement of GB / T26572 - 2011.
表示用于本部件的至少一种均质材料中所含的危害物质超过GB / T26572 - 2011 的限制要求。

For European Community Users

Cognex complies with Directive 2012/19/EU OF THE EUROPEAN PARLIAMENT AND OF THE COUNCIL of 4 July 2012 on waste electrical and electronic equipment (WEEE).

This product has required the extraction and use of natural resources for its production. It may contain hazardous substances that could impact health and the environment, if not properly disposed.

In order to avoid the dissemination of those substances in our environment and to diminish the pressure on the natural resources, we encourage you to use the appropriate take-back systems for product disposal. Those systems will reuse or recycle most of the materials of the product you are disposing in a sound way.


The crossed out wheeled bin symbol informs you that the product should not be disposed of along with municipal waste and invites you to use the appropriate separate take-back systems for product disposal.

If you need more information on the collection, reuse, and recycling systems, please contact your local or regional waste administration.

You may also contact your supplier for more information on the environmental performance of this product.

Copyright © 2026
Cognex Corporation. All Rights Reserved.