COGNEX

Advanced machine vision made easy

In-Sight® 3800 Line Scan

Reference Manual



2026 September 24

Legal Notices

The software described in this documentation is provided "as is" and "as available," without warranty of any kind, express or implied, including but not limited to the warranties of merchantability, fitness for a particular purpose, and non-infringement. In no event shall Cognex Corporation and its global affiliates (collectively, “Cognex”) be liable for any claims, damages, or other liability arising from, out of, or in connection with the software or your use of the software.

Your use of this software is governed by the full terms and conditions of the Cognex Software License Agreement. For complete licensing details and legal terms, please visit https://www.cognex.com/terms-and-conditions.

The information in this document is subject to change without notice and should not be construed as a commitment by Cognex. Cognex is not responsible for any errors that may be present in either this document or the associated software.

Companies, names, and data used in examples herein are fictitious unless otherwise noted. No part of this document may be reproduced or transmitted in any form or by any means, electronic or mechanical, for any purpose, nor transferred to any other media or language without the written permission of Cognex Corporation.

Portions of the hardware and software provided by Cognex may be covered by one or more U.S. and foreign patents, as well as pending U.S. and foreign patents listed on the Cognex web site at: cognex.com/patents.

In the event of any inconsistency between the English language version of this documentation and any other language version, the English language version shall take precedence.

Copyright © 2026. Cognex Corporation. All Rights Reserved.

The following are registered U.S. trademarks of Cognex Corporation:

2DMAX, 3D LIGHTBURST TECHNOLOGY, ADVANTAGE, ALIGNPLUS, ASSEMBLYPLUS, COGNEX, COGNEX VISION FOR INDUSTRY, CVL, DATAMAN, DVT, EASYBUILDER, EDGE INTELLIGENCE, HOTBARS, IDMAX, IN-SIGHT, LIGHTBURST, MX, OMNIVIEW, PATFIND, PATFLEX, PATINSPECT, PATMAX, PATMAX REDLINE, PATQUICK, POWERGRID, QUICKSORT, ULTRALIGHT, VISION SOLUTIONS, VISIONPRO, VISIONVIEW

The following are trademarks of the Cognex Corporation:

1DMAX, 3D SYMBOLIC LIGHT, 3D-LOCATE, 3DMAX, ONEVISION, PINPOINT, RANGEMAX, SLX, VIDI, OCRMAX, INSPECTEDGE, VISION SOLUTIONS

Portions copyright © Microsoft Corporation. All rights reserved.

Portions copyright © MadCap Software, Inc. All rights reserved.

Other product and company trademarks identified herein are the trademarks of their respective owners.

Precautions

To reduce the risk of injury or equipment damage, observe the following precautions when you install the Cognex product:

- The safety of any system incorporating this product is the responsibility of the assembler of the system.
- Do not install Cognex products where they are exposed to environmental hazards such as excessive heat, dust, moisture, humidity, impact, vibration, corrosive substances, flammable substances, or static electricity.
- Route cables and wires away from high-current wiring or high-voltage power sources to reduce the risk of damage or malfunction from the following causes: over-voltage, line noise, electrostatic discharge (ESD), power surges, or other irregularities in the power supply.
- Do not expose the image sensor to laser light. Image sensors can be damaged by direct, or reflected, laser light. If your application requires laser light that might strike the image sensor, use a lens filter at the corresponding laser wavelength. For suggestions, contact your local integrator or application engineer.
- This product does not contain user-serviceable parts. Do not make electrical or mechanical modifications to product components. Unauthorized modifications can void your warranty.
- Changes or modifications not expressly approved by the party responsible for regulatory compliance could void the user's authority to operate the equipment.
- Include service loops with cable connections.
- Ensure that the cable bend radius begins at least six inches from the connector. Cable shielding can be degraded or cables can be damaged or wear out faster if a service loop or bend radius is tighter than 10X the cable diameter.
- This device should be used in accordance with the instructions in this manual.
- All specifications are for reference purposes only and can change without notice.

Symbols

The following symbols indicate safety precautions and supplemental information:

WARNING: This symbol indicates a hazard that could cause death, serious personal injury or electrical shock.

CAUTION: This symbol indicates a hazard that could result in property damage.

Note: This symbol indicates additional information about a subject.

Tip: This symbol indicates suggestions and shortcuts that might not otherwise be apparent.

Table of Contents

Legal Notices ... 2
Precautions ... 3
Symbols ... 4
Table of Contents ... 5
Getting Started ... 7
About the In-Sight 3800 Line Scan ... 7
In-Sight 3800 Line Scan Series Accessories ... 8
Lenses ... 8
Lens Covers ... 8
Mounting Brackets ... 9
Cables ... 9
Setting Up Your In-Sight Vision System ... 10
Vision System Layout ... 11
Dimensions ... 13
In-Sight 3800 with 45 mm Lens Cover ... 13
In-Sight 3800 with 60 mm Lens Cover ... 13
In-Sight 3800 with 75 mm Lens Cover ... 14
In-Sight 3800 - Smart Camera Only ... 14
Mounting the Vision System ... 15
Mounting Bracket (BKT-INS-01) ... 15
Converter Mounting Bracket (ISB-7000-7K) ... 16
Converter Mounting Bracket (ISB-7000-5K) ... 16
Connection Options ... 17
Connecting the Ethernet Cable ... 17
Connecting the Power and I/O Breakout Cable ... 17
Attaching Lens Cover ... 17
Indicator LEDs ... 17
Using Your In-Sight Vision System ... 19
Installing the In-Sight Vision Suite ... 19
Trigger Types ... 19
External Triggers ... 19
Industrial Protocols ... 19
Specifications ... 21
In-Sight 3800 Line Scan Vision System ... 21
In-Sight 3800 Line Scan Vision System Image Sensor ... 22
Spectral Response Diagrams ... 22
Acquisition Trigger Input ... 23
Encoder Inputs ... 24
High-Speed Outputs ... 25
Ethernet Cable ... 26
Breakout Cable ... 27
Cleaning and Maintenance ... 28

Clean the Housing 28
Clean the Vision System Image Sensor Window 28
Clean the Vision System Lens Cover 28
Regulations and Conformity 29
中国大陆RoHS (Information for China RoHS Compliance) 30
For European Community Users 30

Getting Started

This section provides general information about the In-Sight 3800 Line Scan vision system and the accessories and systems.

About the In-Sight 3800 Line Scan

The In-Sight 3800 Line Scan is the first smart line scan vision system to offer embedded AI tools. With up to 4K resolution, the 3800 Line Scan can perform tasks such as imaging continuous web materials, fast moving parts, large parts, and cylindrical parts with great speed and accuracy.

The In-Sight 3800 Line Scan provides the following improvements to the In-Sight 9902L:

- Increased resolution, now up to 4K
- Considerably faster line rate and tool processing speeds
- Embedded Edge Learning tools to support more complex applications

In-Sight 3800 Line Scan Series Accessories

You can purchase the following components separately. For a list of options and accessories, contact your local Cognex sales representative.

Lenses

Accessory	Product Number	Illustration
6 mm Moritex SR series lens	ML-U0618SR-18C	
12 mm Moritex SR series lens	ML-U1217SR-18C	
16 mm Moritex SR series lens	ML-U1615SR-18C	
25 mm Moritex SR series lens	ML-U2515SR-18C	
35 mm Moritex SR series lens	ML-U3518SR-18C	
50 mm Moritex SR series lens	ML-U5022SR-18C	

Note: Moritex lenses previously had the prefix LMC in the product number (for example ML-M0625UR was previously named LMC-ML-M0625UR). If you purchased a Moritex lens under the previous product number, you can still refer to this compatibility table using the product number without the LMC prefix.

Lens Covers

Accessory	Product Number	Illustration
15 mm Plastic Lens Cover	COV-380-CMNT-15	
45 mm Plastic Lens Cover	COV-380-CMNT-45	
60 mm Plastic Lens Cover	COV-380-CMNT-60	
75 mm Plastic Lens Cover	COV-380-CMNT-75	
30 mm Lens Cover Extender	COV-7000-CMNT-LGX	
Torch-HR diffused front cover	380-TORCH-HR-COVDF	
Torch-HR polarized front cover	380-TORCH-HR-COVPL	
Torch-HR clear front cover	380-TORCH-HR-COVCL	

Mounting Brackets

Accessory	Product Number	Illustration
Mounting bracket with M3, M4 and 1/4 - 20 mounting holes	BKT-INS-01	
Converter mounting bracket with M3 socket head screws/wrench	ISB-7000-7K	
Converter mounting bracket with Phillips flat head M3 screws and M4 screws	ISB-7000-5K	

Cables

Note: Cables are sold separately.

Accessory	Product Number	Illustration
Ethernet Cable, X-coded M12-8 to RJ-45	CCB-84901-2001-xx (straight, xx specifies length: 2m, 5m, 10m, 15m, 30m)	
Ethernet Cable, X-coded M12-8 to RJ-45	CCB-84901-2RBT-xx (straight, xx specifies length: 2m, 5m, 10m)	
Breakout Cable, M12-12 to Flying Lead	CCB-PWRIO- xx (straight, xx specifies length: 5m, 10m, 15m)	

Setting Up Your In-Sight Vision System

Read this section to learn how the vision system connects to its standard components and accessories.

Note:

- Cables are sold separately.
- If a standard component is missing or damaged, immediately contact your Cognex Authorized Service Provider (ASP) or Cognex Technical Support.

CAUTION: All cable connectors are keyed to fit the connectors on the vision system. Do not force the connections or damage may occur.

Vision System Layout

The image and table below shows the elements of the vision system.

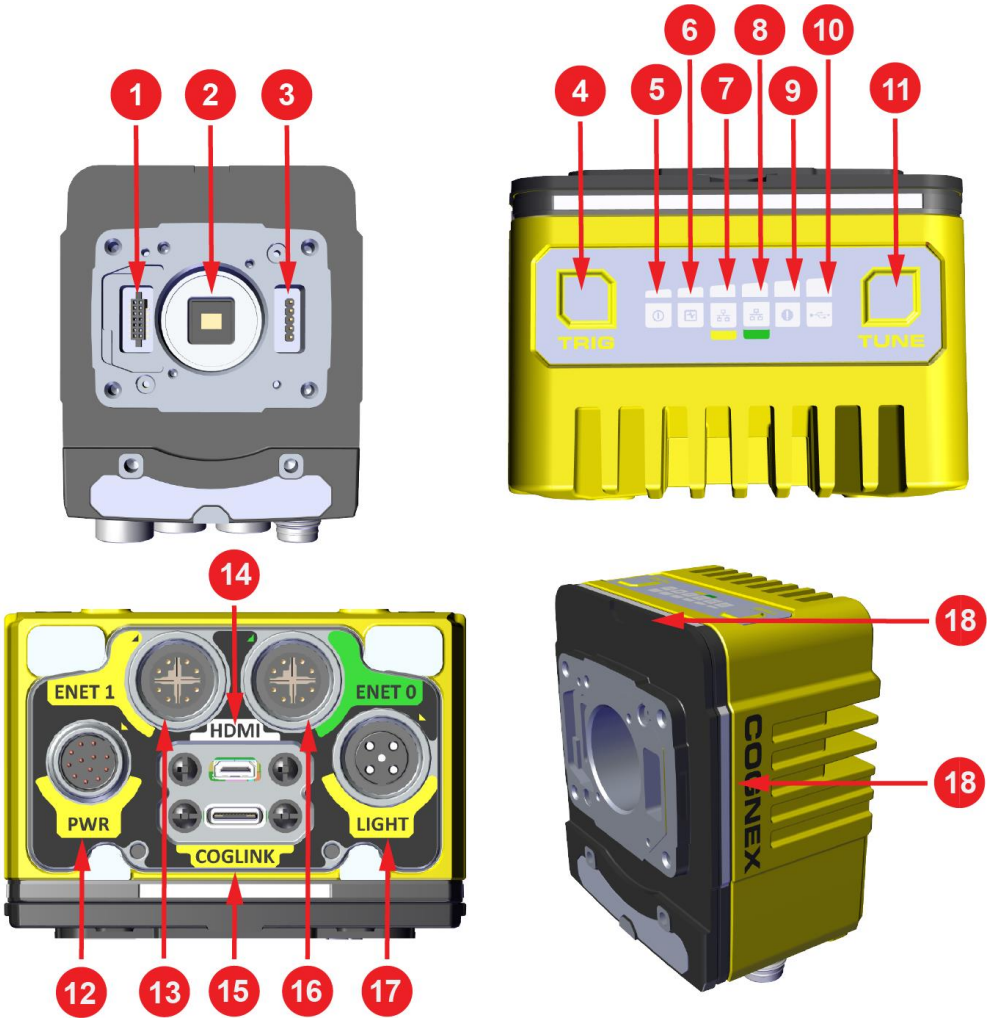

Number	Description
1	Integrated Illumination connector **Note**: Not supported for 3800 In-Sight Line Scan vision systems.
2	Imager/C-mount flange
3	Lens connector **Note**: Not supported for 3800 In-Sight Line Scan vision systems.
4	Trigger button
5	Power LED indicator
6	Train status LED indicator

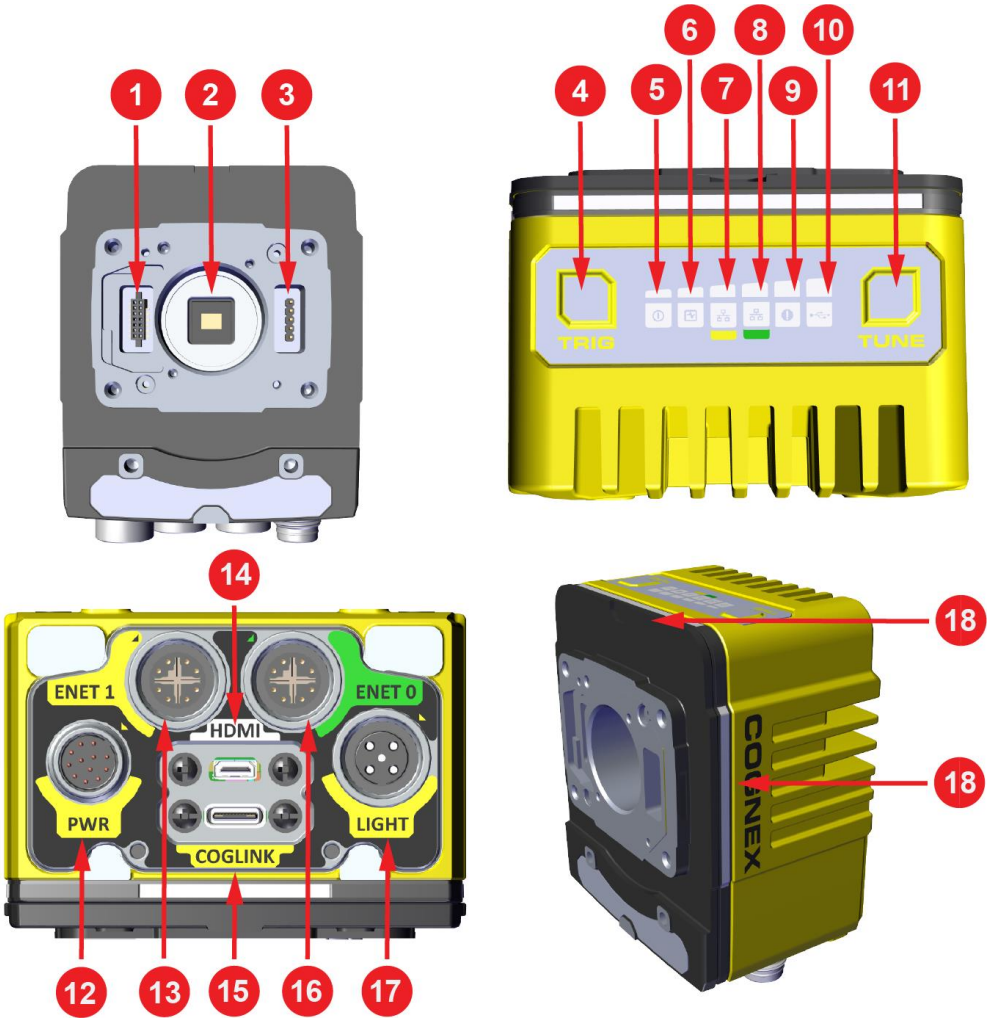

7	Ethernet 1 status LED
8	Ethernet 0 status LED
9	Error LED indicator
10	Coglink/USB-C status LED
11	Tune button
12	Power I/O Breakout cable connector
13	Ethernet connector 1
14	Micro-HDMI connector
15	Coglink/USB-C connector
16	Ethernet connector 0
17	Light connector **Note**: Not supported for 3800 In-Sight Line Scan vision systems.
18	Ring LED indicator

Dimensions

The following sections list dimensions of the vision system.

Note:

- Dimensions are in millimeters and are for reference purposes only.
- All specifications are for reference purposes only and can change without notice.

In-Sight 3800 with 45 mm Lens Cover

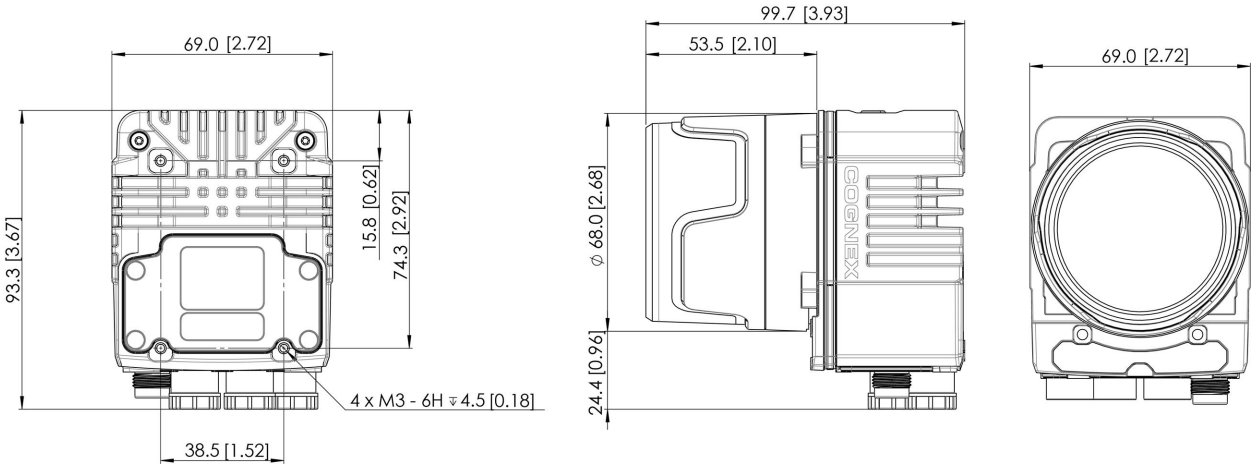

In-Sight 3800 with 60 mm Lens Cover

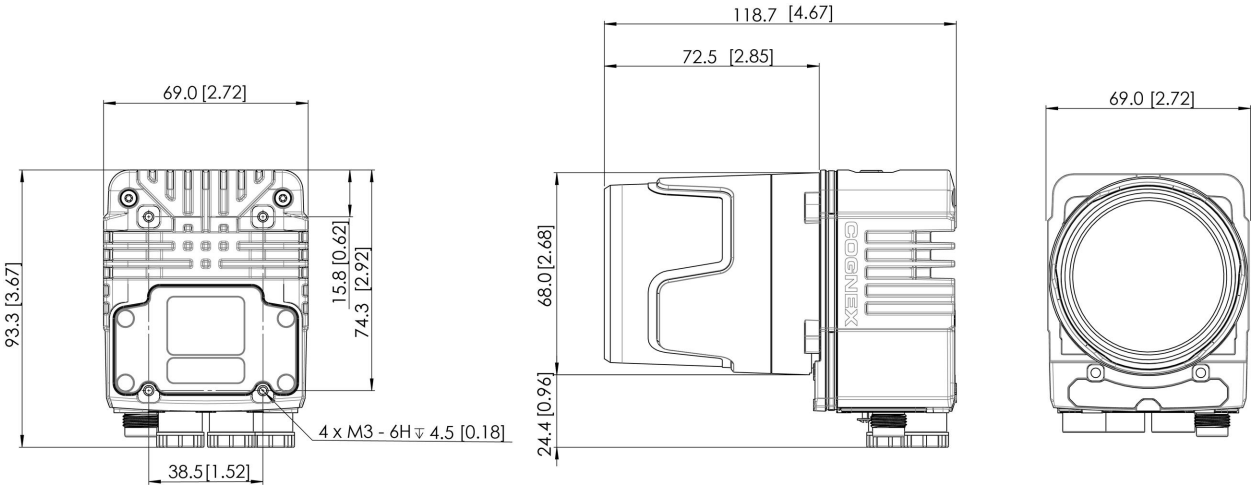

In-Sight 3800 with 75 mm Lens Cover

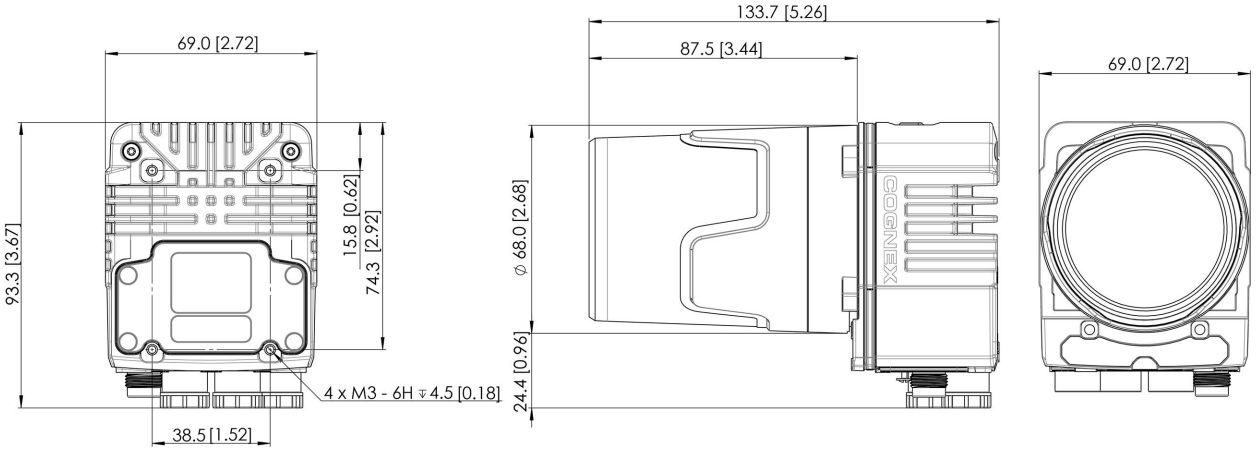

In-Sight 3800 - Smart Camera Only

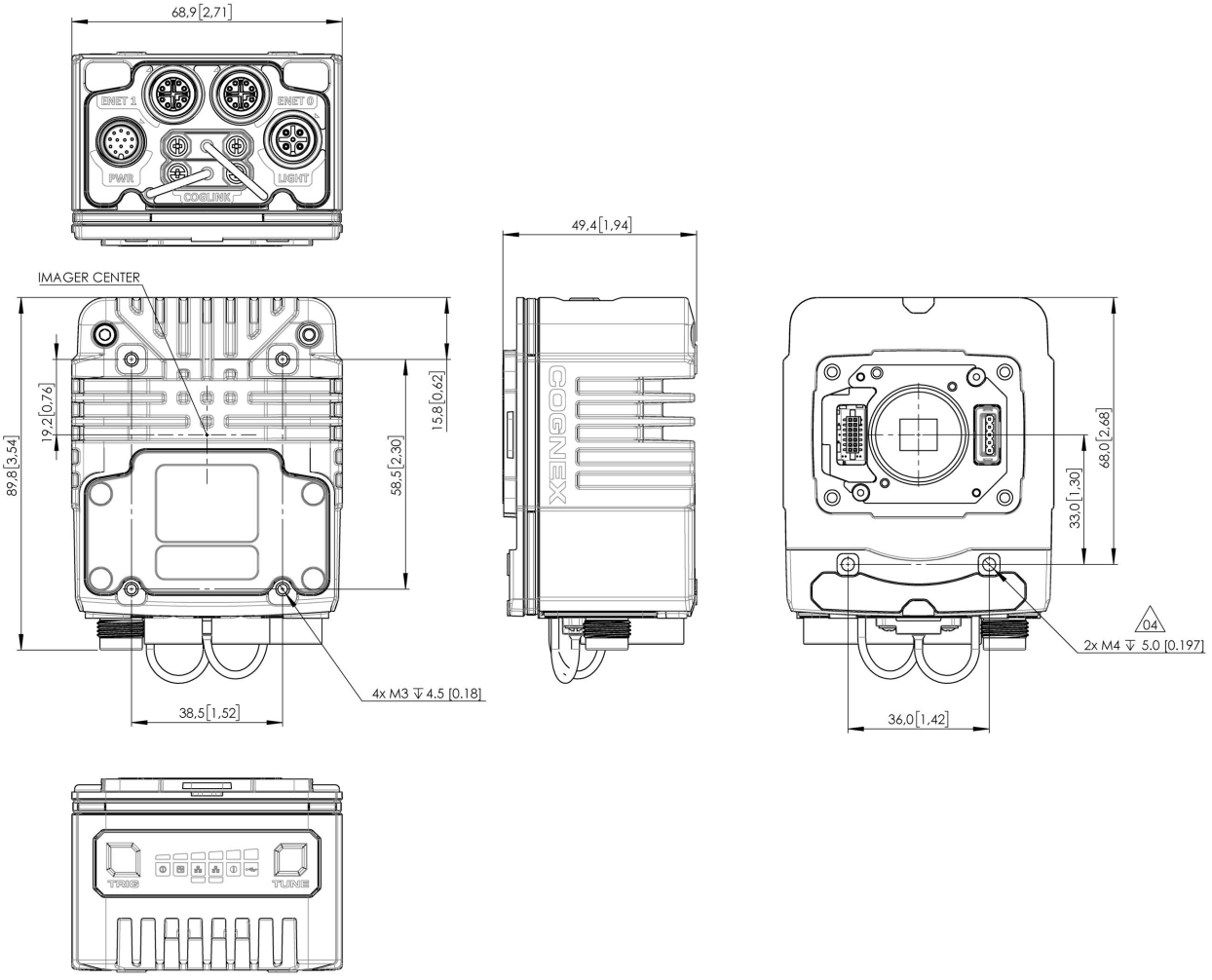

Mounting the Vision System

The vision system provides mounting holes for attachment to a mounting surface.

CAUTION: The vision system has to be grounded, either by mounting the vision system to a fixture that is electrically grounded or by attaching a wire from the mounting fixture of the vision system to frame ground or Earth ground. If a ground wire is used, it has to be attached to one of the mounting points on the bottom plate of the vision system and not to the mounting points on the front of the vision system.

Mounting Bracket (BKT-INS-01)

1. Align the mounting bracket with the mounting holes on the vision system. If using the M3 mounting holes, you can attach the mounting bracket in either orientation.
2. Insert the M3 screws into the mounting holes and tighten. The maximum torque is 0.90 Nm (8 in-lb).

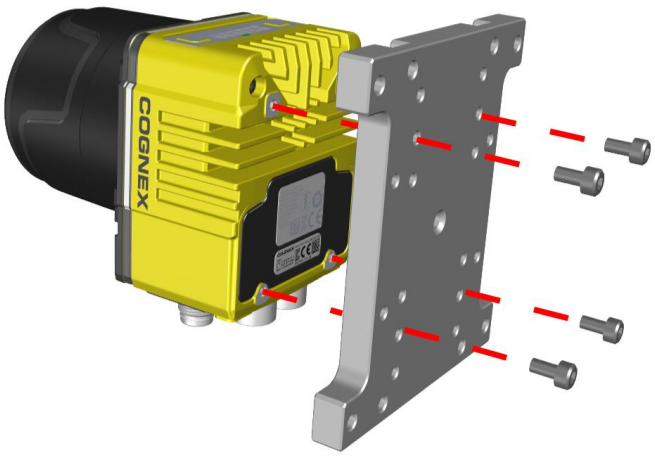

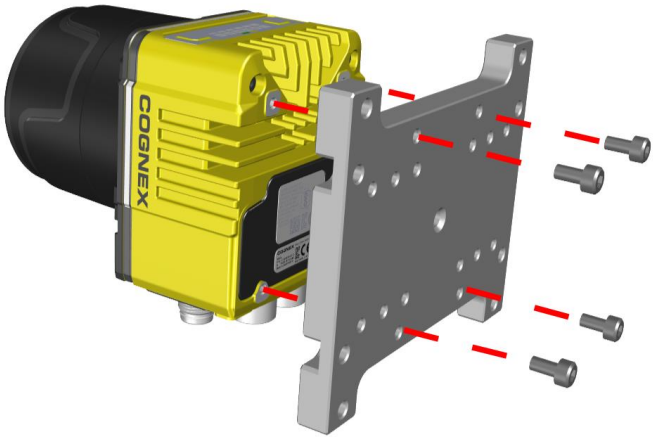

Converter Mounting Bracket (ISB-7000-7K)

1. Align the converter mounting bracket with the mounting holes on the vision system.
2. Insert the M3 screws into the mounting holes and use a 2.5 mm hex wrench to tighten. The maximum torque is 0.90 Nm (8 in-lb).

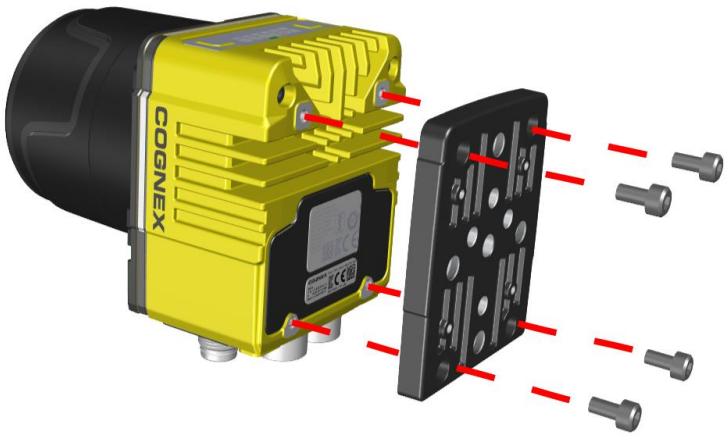

Converter Mounting Bracket (ISB-7000-5K)

1. Align the converter mounting bracket with the mounting holes on the vision system.
2. Insert the Phillips flat head screws into the mounting holes and tighten. The maximum torque is 0.56 Nm (5 in-lb).

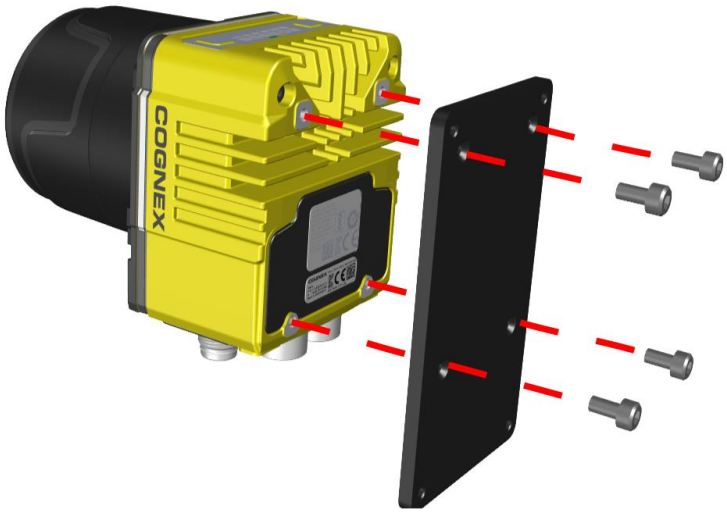

Connection Options

This section summarizes connection options.

Connecting the Ethernet Cable

CAUTION: The Ethernet cable shield has to be grounded at the far end. If the far end device is not grounded, add a ground wire in compliance with local electrical codes. The cable is typically plugged into a switch or router, which has to have a grounded Ethernet connector. Use a digital voltmeter to validate the grounding.

1. Connect the M12 connector of the Ethernet cable to the green ENET0 connector of the vision system.
2. Connect the RJ-45 connector of the Ethernet cable to a switch, router, or PC.

Connecting the Power and I/O Breakout Cable

CAUTION: To reduce emissions, connect the far end of the Breakout cable shield to frame ground.

Note:

- Perform wiring or adjustments to I/O devices when the vision system is not receiving power.
- You can clip unused wires short or use a tie made of non-conductive material to tie them back. Keep bare wires separated from the +24 V DC wire.

1. Verify that the 24 V DC power supply is unplugged and not receiving power.
2. Attach the +24 V DC connector of the Power and I/O Breakout cable and Ground wires to the corresponding terminals on the power supply. For more information, see *Specifications* on page 21.
3. Attach the M12 connector of the Power and I/O Breakout Cable to the 24 V DC connector of the vision system.
4. Restore power to the 24 V DC power supply and turn it on if necessary.

Attaching Lens Cover

Note: The same instructions apply to the 45 mm, 60 mm, and 75 mm lens covers.

1. Place the base of the lens cover on the reader and screw it in. The recommended torque is 0.5 Nm.
2. Attach the top part and turn it clockwise until it latches on the base.

Indicator LEDs

The table summarizes the functions of the indicator LEDs on In-Sight 3800 Line Scan vision systems.

Indicator	Color/Status	Meaning
Ring LED indicator	GREEN, blinking	The Ring LED indicators blink in GREEN when the vision system produces a pass result. **Note**: In case of a pass result, the Pass/Fail indicator LED is also blinking in GREEN.
	RED, blinking	The Ring LED indicators blink in RED when the vision system produces a fail result. **Note**: In case of a fail result, the Pass/Fail indicator LED is also blinking in RED.
	WHITE	The Ring LED indicators are WHITE when you trigger the Identify function in In-Sight Vision Suite.
Power LED indicator	ON	The vision system is ON.
	OFF	The vision system is OFF.
Train/Trigger status LED indicator	ON	If the vision system has a trained code, this LED is GREEN.
	OFF	If the vision system has no trained code, this LED is OFF.
Pass/Fail LED indicator	GREEN, blinking	The vision system produces a pass result. **Note**: In case of a pass result, the Ring LED indicators are also blinking in GREEN.
	RED, blinking	The vision system produces a fail result. **Note**: In case of a fail result, the Ring LED indicators are also blinking in RED.
Communication LED indicators	ON	The Communication LEDs blink when the vision system detects network traffic. The color of each LED depends on the network speed: • RED: 10 Mbps or below • YELLOW: 10 Mbps to 100 Mbps • GREEN: 1000 Mbps **Note**: The vision system monitors network speed and updates the Communication LED every 50 ms.
	OFF	The LED is OFF when there is no Ethernet connection.
Error	ON	The LED is ON when the In-Sight 3800 Line Scan vision system detects an error.

Using Your In-Sight Vision System

This section provides information on the installation of the In-Sight Vision Suite, trigger types, and protocols.

Installing the In-Sight Vision Suite

Follow the steps below to install and connect your vision system to the In-Sight Vision Suite.

1. Download the latest version of the In-Sight Vision Suite from support.cognex.com/ and follow the on-screen steps.
2. Connect the 3800 series vision system to your PC.
3. Launch the In-Sight Vision Suite and click **Refresh**.
4. Select a vision system from the list and click **Connect**.

Trigger Types

The In-Sight 3800 vision systems support the following trigger modes:

- **Self**: The vision system acquires an image and runs the job continuously at a time interval you configure.

External Triggers

If you are using external triggering, you can use any of the following methods to trigger your vision system.

- Press the trigger button on the vision system.

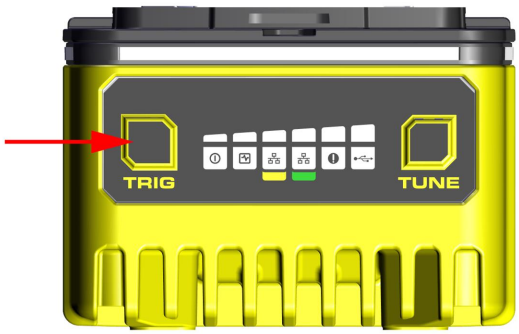

- Send a trigger command over Native Mode.
- Send a trigger through the trigger input line in Spreadsheet.
- Send a trigger through the network using UDP.
- Send a trigger through factory protocols (FFP).
- Send a trigger through the WebHMI trigger button.

Note: You can also initiate external triggering through industrial protocols from a programmable logic controller.

Industrial Protocols

The vision system supports the following industrial protocols:

- EtherNet/IP™, EDS and PLC
- PROFINET (Class B)
- SLMP Protocol
- TCP/IP
- OPC/UA
- FTP

For more information, see **Industrial Communications** in the *In-Sight Spreadsheet Help* documentation.

Specifications

The following sections list general specifications for the vision system.

In-Sight 3800 Line Scan Vision System

Specification	In-Sight 3800
Lens Type	C-Mount only
Trigger	1 opto-isolated, acquisition trigger input.
Discrete Inputs	1 opto-isolated, acquisition trigger input. 2 encoder line inputs for quadrature support. 1 general-purpose input.
Discrete Outputs	Up to 2 high-speed outputs when connected to the Breakout cable.
Encoder Specifications	12 - 30 VDC (500 kHz max)
Status LEDs	Pass/Fail LED and Indicator Ring, Network LED, and Error LED.
Memory	4 GB
Job / Program Storage	7.2 GB non-volatile flash memory, unlimited storage using remote network device.
Image Processing Memory	Dynamic allocation shared with Job / Program Storage
Network Communication	2 Ethernet ports, 10/100/1000 BaseT with auto MDIX. IEEE 802.3 TCP/IP Protocol. Supports DHCP, static, and link-local IP address configuration.
Communication Protocols	TCP/IP, PROFINET, EtherNet/IP, SLMP, ModbusTCP, (S)FTP, RS-232C, IEEE 1588 (CIPSync)
IEEE 1588 Support	Timestamp resolution: 8 ns; Synchronization accuracy through transparent clock: 5 ns
Power Consumption	24 V DC ± 10%, 2.0 A maximum.
Power Output	24 V DC at 1.0 A maximum to external light.
Material	Die-cast and extruded aluminum and zinc housing.
Finish	Painted.
Mounting	Four M3 threaded mounting holes. See *Mounting Brackets* on page 9 for supported mounts. Pattern: 38.5 × 58.5 mm (1.52 × 2.60 in)
Weight	In-Sight 3800 with no accessories attached: 570 g (20.10 oz). • with 45 mm plastic C-Mount cover (COV-380-CMNT-45): 625 g (22.0 oz.) - no lens included. • with 60 mm plastic C-Mount cover (COV-380-CMNT-60): 635 g (22.4 oz.) - no lens included. • with 75 mm plastic C-Mount cover (COV-380-CMNT-75): 650 g (22.9 oz.) - no lens included.
Case Temperature	0° C to 40° C (32° F to 104° F)
Storage Temperature	-20° C to 80° C (-4° F to 176° F)
Humidity	< 95% non-condensing

Specification	In-Sight 3800
Protection	IP67 with all cables properly attached (or the provided connector plug installed) and the IP67-rated cover properly installed.
Shock (Shipping and Storage)	IEC 60068-2-27 - 500 shocks in each polarity of each (X, Y, and Z) axis, 3000 shocks total, semi-sinusoidal, 11 g, 10 ms
Vibration (Shipping and Storage)	IEC 60068-2-6: vibration test in each of the three main axis for 2 hours at 10 Gs (10 to 500 Hz at 100 m/s^2 / 15 mm) with cables or cable plugs and a 150 gram or lighter lens attached.
Regulations/Conformity	CE, FCC, KCC, TÜV SÜD NRTL, EU RoHS, China RoHS

In-Sight 3800 Line Scan Vision System Image Sensor

Specification	1K Mode	2K Mode	4K Mode
Bit Depth	8-bit monochrome	8-bit monochrome	8-bit monochrome
Line Rate (Maximum, Full Resolution)	87 kHz (11.5 µs per line)	169 kHz (5.9 µs per line)	84 kHz (11.9 µs per line)
Sensor Type	1" CMOS	1" CMOS	1" CMOS
Image Sensor Properties	14 µm x 14 µm square pixels	7 µm x 7 µm square pixels	3.45 x 3.45 µm square pixels
Maximum Image Resolution (pixels)	1024 x 16384 (16 MP)	2048 x 16384 (32 MP)	4096 x 16384 (64MP)
Electronic Shutter Speed	0.1 µs to 1,000,000 µs	0.1 µs to 1,000,000 µs	0.1 µs to 1,000,000 µs

Spectral Response Diagrams

The following diagram represents the response of the vision system to different wavelengths of light.

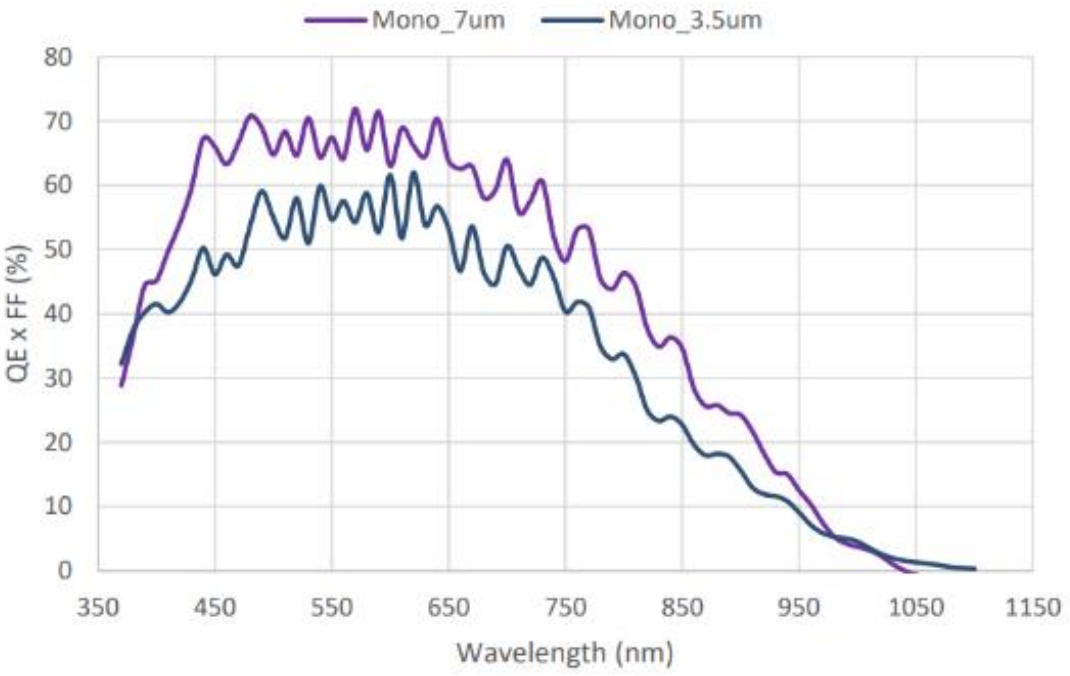

Acquisition Trigger Input

The vision system features one acquisition trigger input, which is optically isolated. You can configure the acquisition trigger input to trigger from an NPN (current sinking) or PNP (current sourcing) device.

- To trigger from an NPN type photoelectric sensor or PLC output, connect COMMON IN to +24 VDC and connect IN 0 to the output of the photoelectric sensor. When the output turns ON, it pulls TRIGGER down to 0 VDC, turning the opto-coupler ON.
- To trigger from a PNP photoelectric sensor or PLC output, connect IN 0 to the output of the photoelectric sensor and connect COMMON IN to 0 VDC. When the output turns ON, it pulls TRIGGER up to +24 VDC, turning the opto-coupler ON.

Note: The acquisition input is compliant to IEC 61131-2 Type 1, 2, 3. The current input limit is 2.5 mA. The voltage range is between 12 - 30 V. The maximum in put frequency is 500 kHz, and depends on the length of the cable. The 500 kHz is valid with up to 15 meters long Cognex cables.

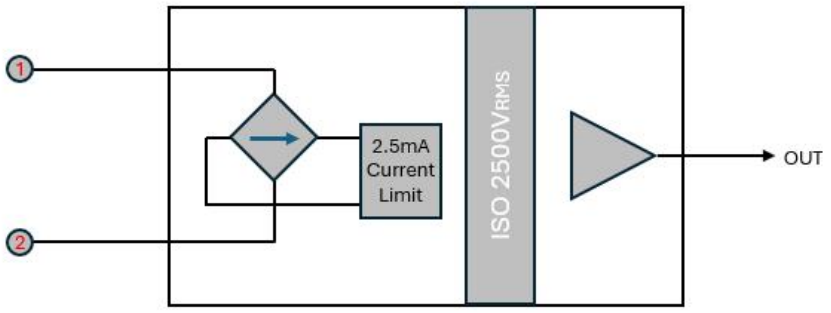

Number	Input
1	IN 0
2	COMMON IN

Encoder Inputs

You can use the breakout cable for communication between the vision system and a single or quadrature encoder.

Note: The encoder inputs are compliant to IEC 61131-2 Type 1, 2, 3. The current input limit is 2.5 mA. The voltage range is between 10 - 30 V. The maximum input frequency is 500 kHz, and depends on the length of the cable. The 500 kHz is valid with up to 15 m long Cognex cables.

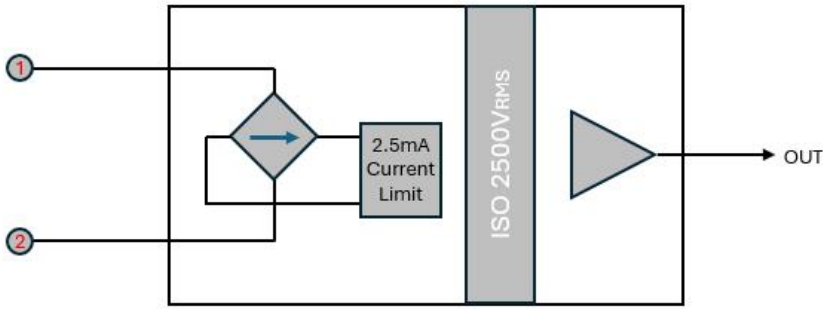

Number	Input
1	**IN2 / IN3 (Encoder Inputs)**
2	**COMMON IN**

The following diagram shows the encoder input wiring. For single encoders, use the ENCODER A pin. For quadrature encoders, you can use either ENCODER pin. For more information, see *Breakout Cable* on page 27.

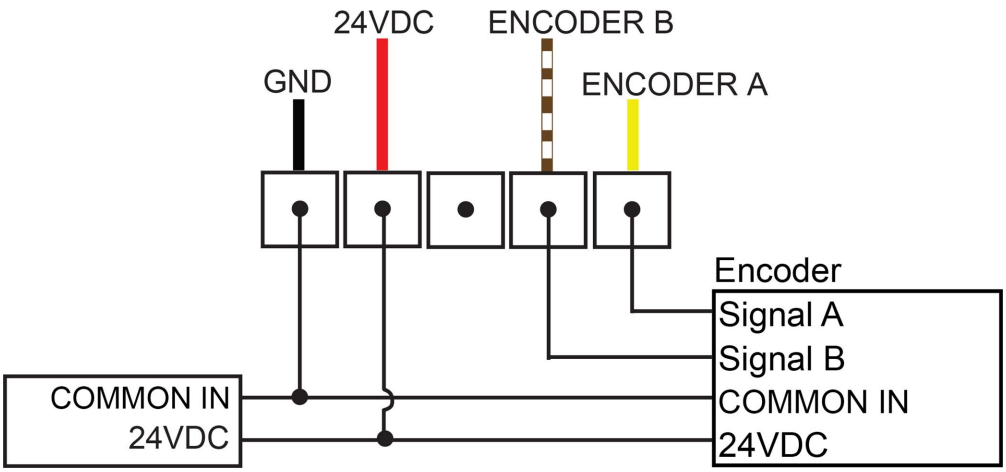

High-Speed Outputs

Specification	Description
Voltages	V_{MAX}: 26 VDC through external load V_{OL}: ≤ ± 3 V @ 50 mA
Current	I_{MAX}: 50 mA maximum sink or source current
	Each line is protected against over-current, short circuits and transients from switching inductive loads. High current inductive loads require an external protection diode.

For NPN lines, the external load should be connected between the output and the positive supply voltage (< 26 VDC). The output pulls down to less than 3 VDC when ON, which causes current to flow through the load. When the output is OFF, no current flows through the load.

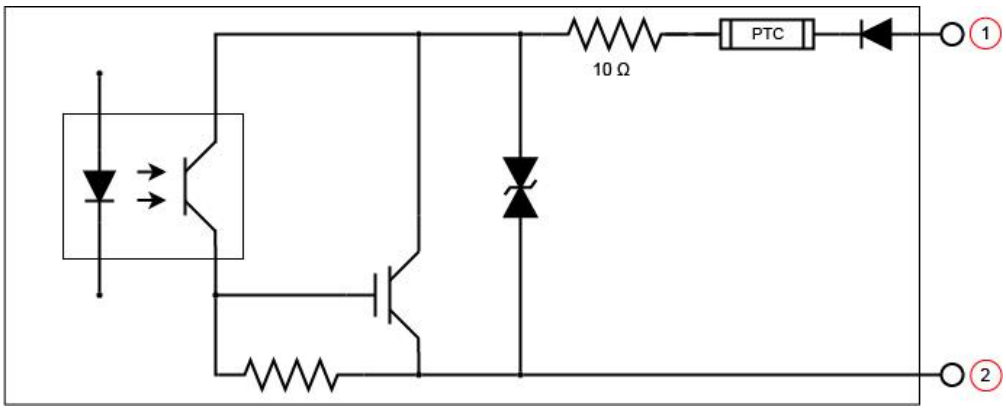

Number	Output
1	NPN OUT
2	COMMON OUT

For PNP lines, the external load should be connected between the output and the negative supply voltage (0 VDC). When connected to a 24 VDC power supply, the output pulls up greater than 21 VDC when ON, and current flows through the load. When the output is OFF, no current flows through the load.

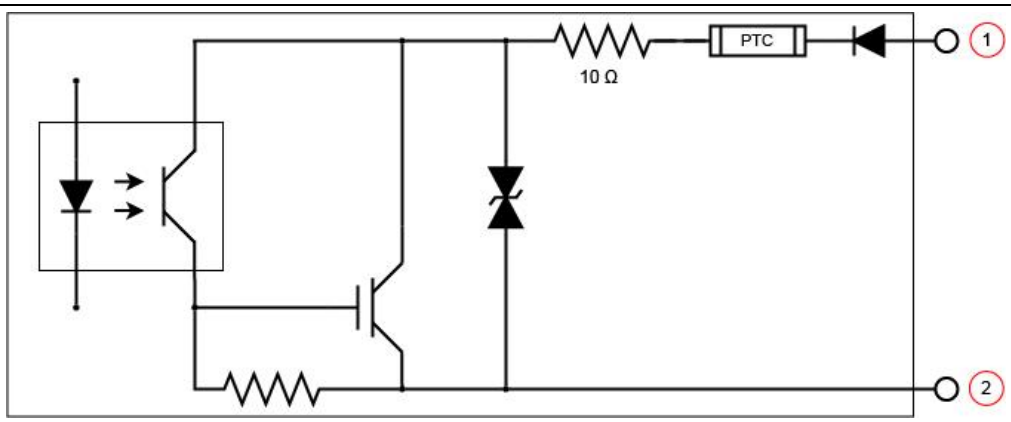

Number	Output
1	COMMON OUT
2	PNP OUT

Ethernet Cable

The Ethernet cable provides Ethernet connectivity to the vision system. The Ethernet cable is used to connect the vision system to other network devices.

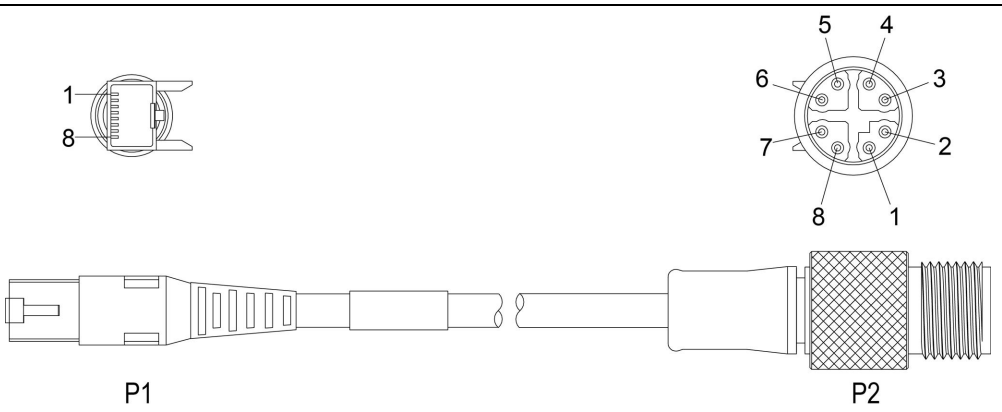

P1 Pin Number	Wire Color	Signal Name	P2 Pin Number
1	White/Orange	TxRx A +	1
2	Orange	TxRx A -	2
3	White/Green	TxRx B +	3
4	Blue	TxRx C +	8
5	White/Blue	TxRx C -	7
6	Green	TxRx B -	4
7	White/Brown	TxRx D +	5
8	Brown	TxRx D -	6

CAUTION: The Ethernet cable shield has to be grounded at the far end. Whatever this cable is plugged into (typically a switch or router) should have a grounded Ethernet connector. A digital voltmeter has to be used to validate the grounding. If the far end device is not grounded, a ground wire should be added in compliance with local electrical codes.

Note:

- Cables are sold separately.
- The wiring for this cable follows standard industrial Ethernet M12 specifications. It differs from the 568B standard.

Breakout Cable

The Breakout cable provides connections to an external power supply, the acquisition trigger input, general-purpose inputs, high-speed outputs, and RS-232 serial communications. The Breakout cable is not terminated.

The Breakout cable can be connected to devices, such as a trigger sensor or strobe light. The Breakout cable is not terminated.

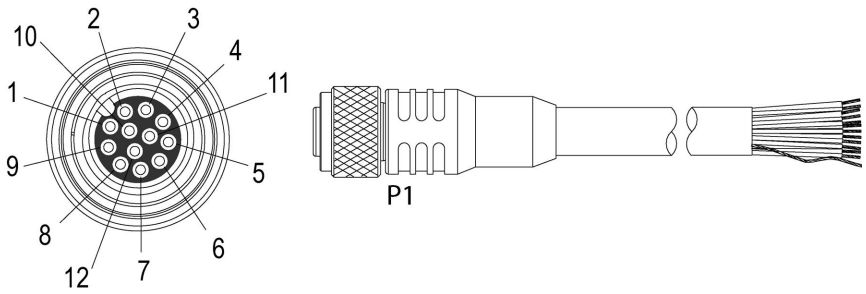

Pin#	Signal Names	Wire Color
1	ENCODER A INPUT	Yellow
2	RS-232 TRANSMIT	White/Yellow
3	RS-232 RECEIVE	Brown
4	ENCODER B INPUT	White/Brown
5	IN 1	Violet
6	COMMON IN	White/Violet
7	+24VDC	Red
8	GND	Black
9	COMMON OUT	Green
10	TRIGGER	Orange
11	HSOUT 0	Blue
12	HSOUT 1	Grey

Note:

- Cables are sold separately.
- Perform wiring or adjustments to I/O devices when the vision system is not receiving power.
- You can cut exposed wires short or trim wire ends. You also can tie the wires back if you use a tie made of non-conductive material. Keep bare wires separated from the +24 V DC wire.
- When using the 15 meter Breakout cable, full 24 V DC voltage must be maintained at the input leads of the Breakout cable when the vision system is operating.

Cleaning and Maintenance

Clean the Housing

To clean the outside of the vision system housing, use a small amount of mild detergent cleaner or isopropyl alcohol on a cleaning cloth. Do not pour the cleaner on the vision system housing.

⚠ CAUTION: Do not attempt to clean any In-Sight product with harsh or corrosive solvents, including lye, methyl ethyl ketone (MEK) or gasoline.

Clean the Vision System Image Sensor Window

To remove dust from the outside of the image sensor window, use a pressurized air duster. The air must be free of oil, moisture or other contaminants that could remain on the glass and possibly degrade the image. Do not touch the glass window. If oil or smudges remain, use a cotton bud and alcohol (ethyl, methyl, or isopropyl) to clean the window. Do not pour the alcohol on the window.

Clean the Vision System Lens Cover

To remove dust from the lens cover, use a pressurized air duster. The air must be free of oil, moisture or other contaminants that could remain on the lens cover. To clean the plastic window of the lens cover, use a small amount of isopropyl alcohol on a cleaning cloth. Do not scratch the plastic window. Do not pour the alcohol on the plastic window.

Regulations and Conformity

Note: For the most current CE and UKCA declaration and regulatory conformity information, see the Cognex support site: cognex.com/support.

In-Sight 3800 vision systems have the Regulatory Model number 50103 and meet or exceed the requirements of all applicable standards organizations for safe operation. However, as with any electrical equipment, the best way to ensure safe operation is to operate them according to the agency guidelines that follow. Please read these guidelines carefully before using your device.

Safety and Regulatory	
Manufacturer	Cognex Corporation One Vision Drive Natick, MA 01760 USA
CE	In-Sight 3800 1.6 MP, 3 MP, 5 MP: Regulatory Model 50103 This is a class A product. In a domestic environment this product may cause radio interference in which case the user may be required to take immediate measures. This equipment complies with the essential requirements of the EU Directive 2014/30/EU. Declarations are available from your local representative.
EU RoHS	Compliant to the most recent applicable directive.
FCC	FCC Part 15, Class A This equipment has been tested and found to comply with the limits for a Class A digital device, pursuant to part 15 of the FCC Rules. These limits are designed to provide reasonable protection against harmful interference when the equipment is operated in a commercial environment. This equipment generates, uses, and can radiate radio frequency energy and, if not installed and used in accordance with the instruction manual, may cause harmful interference to radio communications. Operation of this equipment in a residential area is likely to cause harmful interference in which case the user will be required to correct the interference at his own expense.
Korea KC	This device is certified for office use only and if used at home, there can be frequency interference problems. A급 기기(업무용 방송통신기자재): 이 기기는 업무용(A급) 전자파적합기기로서 판 매자 또는 사용자는 이 점을 주의하시기 바라 며, 가정외의 지역에서 사용하는 것을 목적으 로 합니다. In-Sight 3800 1.6 MP, 3 MP, 5 MP: Regulatory Model 50103
TÜV	In-Sight 3800 1.6 MP, 3 MP, 5 MP: Regulatory Model 50103
	NRTL: TÜV SÜD SCC/NRTL OSHA Scheme for UL/CAN 61010-1.
	CB report available upon request. TÜV SÜD, IEC/EN 61010-1.
UKCA	In-Sight 3800 1.6 MP, 3 MP, 5 MP: Regulatory Model 50103 This is a class A product. In a domestic environment this product may cause radio interference in which case the user may be required to take immediate measures. This equipment complies with the essential requirements of the Electromagnetic Compatibility Regulations 2016. Declarations are available from your local representative.

中国大陆RoHS (Information for China RoHS Compliance)

根据中国大陆《电子信息产品污染控制管理办法》(也称为中国大陆RoHS), 以下部份列出了本产品中可能包含的有毒有害物质或元素的名称和含量。



	Hazardous Substances 有害物质					
Part Name 部件名称	Lead (Pb) 铅	Mercury (Hg) 汞	Cadmium (Cd) 镉	Hexavalent Chromium (Cr (VI)) 六价铬	Polybrominated biphenyls (PBB) 多溴联苯	Polybrominated diphenyl ethers (PBDE) 多溴二苯醚
Regulatory Model 50103	X	O	O	O	O	O

This table is prepared in accordance with the provisions of SJ/T 11364.
这个标签是根据SJ / T 11364 的规定准备的。

O: Indicates that said hazardous substance contained in all of the homogeneous materials for this part is below the limit requirement of GB / T26572 - 2011.
表示本部件所有均质材料中含有的有害物质低于GB / T26572 - 2011 的限量要求。

X: Indicates that said hazardous substance contained in at least one of the homogeneous materials used for this part is above the limit requirement of GB / T26572 - 2011.
表示用于本部件的至少一种均质材料中所含的危害物质超过GB / T26572 - 2011 的限制要求。

For European Community Users

Cognex complies with Directive 2012/19/EU OF THE EUROPEAN PARLIAMENT AND OF THE COUNCIL of 4 July 2012 on waste electrical and electronic equipment (WEEE).

This product has required the extraction and use of natural resources for its production. It may contain hazardous substances that could impact health and the environment, if not properly disposed.

In order to avoid the dissemination of those substances in our environment and to diminish the pressure on the natural resources, we encourage you to use the appropriate take-back systems for product disposal. Those systems will reuse or recycle most of the materials of the product you are disposing in a sound way.


The crossed out wheeled bin symbol informs you that the product should not be disposed of along with municipal waste and invites you to use the appropriate separate take-back systems for product disposal.

If you need more information on the collection, reuse, and recycling systems, please contact your local or regional waste administration.

You may also contact your supplier for more information on the environmental performance of this product.

Copyright © 2026
Cognex Corporation. All Rights Reserved.