COGNEX

# In-Sight® L38 Series Vision System

## Reference Guide




**2026 September 24**
**Revision: 26.2.1.2**

# Legal Notices

The software described in this document is furnished under license, and may be used or copied only in accordance with the terms of such license and with the inclusion of the copyright notice shown on this page. Neither the software, this document, nor any copies thereof may be provided to, or otherwise made available to, anyone other than the licensee. Title to, and ownership of, this software remains with Cognex Corporation or its licensor. Cognex Corporation assumes no responsibility for the use or reliability of its software on equipment that is not supplied by Cognex Corporation. Cognex Corporation makes no warranties, either express or implied, regarding the described software, its merchantability, non-infringement or its fitness for any particular purpose.

The information in this document is subject to change without notice and should not be construed as a commitment by Cognex Corporation. Cognex Corporation is not responsible for any errors that may be present in either this document or the associated software.

Companies, names, and data used in examples herein are fictitious unless otherwise noted. No part of this document may be reproduced or transmitted in any form or by any means, electronic or mechanical, for any purpose, nor transferred to any other media or language without the written permission of Cognex Corporation.

Copyright © 2026. Cognex Corporation. All Rights Reserved.

Portions of the hardware and software provided by Cognex may be covered by one or more U.S. and foreign patents, as well as pending U.S. and foreign patents listed on the Cognex web site at: cognex.com/patents.

---

The following are registered trademarks of Cognex Corporation:

2DMax, Advantage, AlignPlus, AssemblyPlus, Checker, Cognex, Cognex Vision For Industry, CVL, DataMan, DVT, EasyBuilder, Edge Intelligence, Hotbars, In-Sight, MX, OmniView, PatFind, PatFlex, PatInspect, PatMax, PatMax RedLine, PatQuick, PowerGrid, Smart View, SmartAdvisor, UltraLight, VisionPro, VisionView

The following are trademarks of Cognex Corporation:

The Cognex logo, 1DMax, 3D-Locate, 3DMax, BGAII, CheckPoint, Cognex VSoC, CVC-1000, FFD, iLearn, In-Sight (design insignia with cross-hairs), In-Sight 2000, InspectEdge, Inspection Designer, MVS, NotchMax, OCRMax, PatMax RedLine, ProofRead, SmartSync, ProfilePlus, SmartDisplay, SmartSystem, SMD4, VisiFlex, Xpand

Portions copyright © Microsoft Corporation. All rights reserved.

Portions copyright © MadCap Software, Inc. All rights reserved.

Other product and company trademarks identified herein are the trademarks of their respective owners.

# Table of Contents

**Legal Notices** ..... **2**
**Table of Contents** ..... **3**
**Precautions** ..... **5**
**Symbols** ..... **6**
**Introduction** ..... **7**
About the In-Sight L38 ..... 7
Support ..... 7
Accessories ..... 8
Cables ..... 8
Correction Targets ..... 8
Encoders ..... 9
Connectors and Indicators ..... 11
Working Distances and Fields of View ..... 12
**Theory of Operation** ..... **13**
Operation of the Triangulation Sensor ..... 13
Raw 2D Images ..... 14
Point Cloud ..... 15
Invisible Points ..... 16
Compensation of Perspective ..... 16
Field Correction ..... 18
Scanning and Processing Time ..... 20
Unit Conversions ..... 22
**Installation** ..... **23**
Mount the Vision System ..... 23
Mount the Vision System: Top Housing ..... 24
Mount the Vision System: Rear Housing ..... 25
Mount the Vision System: Through-Body ..... 25
Connect the Ethernet Cable ..... 26
Connect the Breakout Cable ..... 26
Powering the Vision System ..... 27
**Using Your In-Sight Vision System** ..... **28**
Installing the In-Sight Vision Suite ..... 28
**Cleaning and maintenance** ..... **29**
Clean the Housing ..... 29
Window Maintenance ..... 29
**Vision System Specifications** ..... **30**
L38-33, L38-50, L38-100, and L38-300 Dimensions ..... 31
L38-500 Dimensions ..... 32
Laser Specifications ..... 33
Laser Compliance ..... 33
Laser Safety Warnings ..... 36
Label Locations ..... 37

Ethernet Cable ..... 38
Breakout Cable ..... 39
Encoder Specifications ..... 39
Encoder Inputs ..... 40
Encoder Wiring ..... 41
Trigger and Laser Enable Inputs ..... 42
Trigger and Laser Enable Wiring ..... 43
Outputs ..... 43
Output Wiring ..... 45
**Regulations and Conformity ..... 46**
China RoHS ..... 48
For European Community Users ..... 49
Product Service ..... 49

# Precautions

To reduce the risk of injury or equipment damage, observe the following precautions when you install the Cognex product:

- The vision system requires a UL or NRTL listed power supply with a 24VDC output that meets the following rating requirements:
  - At least 1A1,5 A continuous current.
  - A maximum short circuit current of less than 4A.
  - A maximum power of less than 50VA and marked as a Limited Power Source (LPS) or National Electrical Code (NEC) Class 2.

  Any other voltage creates a risk of fire or shock and can damage the components. Applicable national and local wiring standards and rules must be followed.
- This product is intended for industrial use in automated manufacturing or similar applications.
- The safety of any system incorporating this product is the responsibility of the assembler of the system.
- Do not install Cognex products where they are exposed to environmental hazards such as excessive heat, dust, moisture, humidity, impact, vibration, corrosive substances, flammable substances, or static electricity.
- Route cables and wires away from high-current wiring or high-voltage power sources to reduce the risk of damage or malfunction from the following causes: over-voltage, line noise, electrostatic discharge (ESD), power surges, or other irregularities in the power supply.
- This product does not contain user-serviceable parts. Do not make electrical or mechanical modifications to product components. Unauthorized modifications can void your warranty.
- Changes or modifications not expressly approved by the party responsible for regulatory compliance could void the user's authority to operate the equipment.
- Include service loops with cable connections.
- Ensure that the cable bend radius begins at least six inches from the connector. Cable shielding can be degraded or cables can be damaged or wear out faster if a service loop or bend radius is tighter than 10X the cable diameter.
- The vision system's M/S connectors are not supported.
- This device should be used in accordance with the instructions in this manual.
- All specifications are for reference purposes only and can change without notice.

# Symbols

The following symbols indicate safety precautions and supplemental information:

**WARNING**: This symbol indicates a hazard that could cause death, serious personal injury or electrical shock.

**CAUTION**: This symbol indicates a hazard that could result in property damage.

**Note**: This symbol indicates additional information about a subject.

**Tip**: This symbol indicates suggestions and shortcuts that might not otherwise be apparent.

# Introduction

The In-Sight Vision System is a compact, network-ready, stand-alone machine vision system used for automated inspection, measurement, identification and robot guidance applications on the factory floor. All models can be easily configured remotely over a network using an intuitive user interface.

## About the In-Sight L38

The In-Sight L38 Vision System is a breakthrough in 3D vision technology. This unique vision system combines 3D laser displacement technology with a smart camera allowing factory engineers to quickly, accurately, and cost effectively solve a wide variety of inspections on an automated production line. The patented speckle-free BLUE and RED laser optic, an industry first, acquires high quality 3D images. The vision system ships with a high-performance integrated processor, and a comprehensive set of true 3D vision tools. 3D vision tools are set up as easily as 2D vision tools thanks to the familiar and robust In-Sight spreadsheet environment.

The vision system offers the following advanced features:

- The first and only 3D vision system with embedded AI
- High performance 2K resolution 3D smart camera
- Broad suite of 2D and true 3D vision tools
- Deep learning-based EL vision tools
- In-Sight spreadsheet-based setup
- Speckle-free BLUE and RED laser optic

## Support

Refer to the following resources to assist you in using the vision system:

- The *In-Sight® 3D Spreadsheet Help* and *In-Sight® 3D EasyBuilder Help*, provided with In-Sight software.
- On-demand training: cognex.com/on-demand-training.aspx
- The In-Sight online support site: cognex.com/support/insight.

# Accessories

You can purchase the following components separately. For a list of options and accessories, contact your local Cognex sales representative.

## Cables

**Note**: Cables are sold separately.

**CAUTION**: All cable connectors are keyed to fit the connectors on the vision system. Do not force the connections or damage may occur.

| Accessory | Product Number | Illustration |
|---|---|---|
| X-Coded Ethernet Cable, straight, xx (xx specifies length: 2m, 5m, 10m, 30m) | CCB-84901-2001-xx (straight, xx specifies length: 2m, 5m, 10m, 15m, 30m) |  |
| X-Coded Ethernet Cable, right-angled, xx (xx specifies length: 2m, 5m, 10m) | CCB-84901-2002-xx (right-angled, xx specifies length: 2m, 5m, 10m) | |
| M12 with 17 pins to Flying lead, straight, xx (xx specifies length:2m, 5m, 10m, 20m) | CCB-PWIO17-S-xx (xx specifies length:2m, 5m, 10m, 20m) |  |
| M12 with 17 pins to Flying lead, right-angled, xx (xx specifies length:2m, 5m, 10m, 20m) | CCB-PWIO17-R-xx (xx specifies length:2m, 5m, 10m, 20m) | |

## Correction Targets

To perform a correction on a 3D smart camera, you must use a Cognex-supplied correction target. The target consists primarily of a frustum, a feature exhibiting six different planes with eight intersecting points.

| Accessory | Correction Target | Illustration |
|---|---|---|
| 100 mm correction target | IS3d-CORR100-00 | 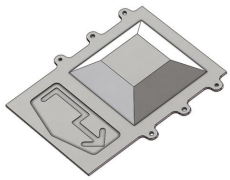 |
| 40 mm correction target | IS3D-CORR40-00 | 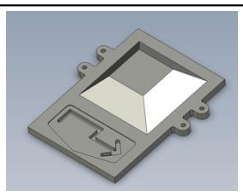 |
| 20 mm correction target | IS3D-CORR20-00 | 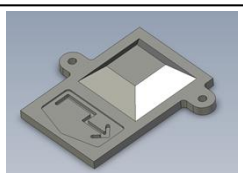 |

| Accessory | Correction Target | Illustration |
|---|---|---|
| 10 mm correction target | IS3D-CORR10-00 | 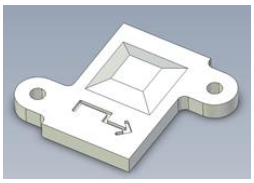 |

The following table lists all the correction calibration target models.

| Model | Top side (mm) | Height (mm) | Sensor Model |
|---|---|---|---|
| CT100 | 100 | 50 | L38-500 |
| CT40 | 40 | 20 | L38-300 |
| CT20 | 20 | 10 | L38-100 |
| CT10 | 10 | 2 | L38-50 |

Contact your Cognex sales representative for choosing the right target for your application.

## Encoders

| Accessory | Product Number | Illustration |
|---|---|---|
| Rotary incremental encoder 5000 PPR, Synchro flange with 6 mm solid shaft, RS422 output | LS-Encoder-5000-00 |  |
| Rotary incremental encoder 2500 PPR, Synchro flange with 6 mm solid shaft, RS422 output | LS-Encoder-2500-00 |  |
| Rotary incremental encoder 1000 PPR, Synchro flange with 6 mm solid shaft, RS422 output | LS-Encoder-1000-00 |  |

The following table shows which encoders are compatible with each L38 variant:

| | L38-33 | L38-50 | L38-100 | L38-300 | L38-500 |
|---|---|---|---|---|---|
| LS-Encoder-5000-00 | ✓ Recommended | ✓ Suitable for High Resolution | | | |

| | L38-33 | L38-50 | L38-100 | L38-300 | L38-500 |
|---|---|---|---|---|---|
| LS-Encoder-2500-00 | ✓ Not suitable for High Resolution | ✓ Recommended | ✓ Recommended | ✓ Recommended | ✓ Not suitable for High Speed |
| LS-Encoder-1000-00 | | | | ✓ Suitable for High Speed | ✓ Recommended |

## Encoder Outputs

This section describes the output of the encoders that are available as accessories for the In-Sight L38. The encoders support an RS422 and an Alarm output.

The following table shows the output signal for each encoder output wire:

| Wire color | Output Signal |
|---|---|
| White | Channel A+ |
| White/brown | Channel A- |
| Green | Channel B+ |
| Green/brown | Channel B- |
| Yellow | Channel N+ |
| Yellow/brown | Channel N- |
| Yellow/black | Alarm |
| Yellow/red | Sense $V_{cc}$ |
| Red | DC 5/10 - 30 V |
| Black | GND |

# Connectors and Indicators

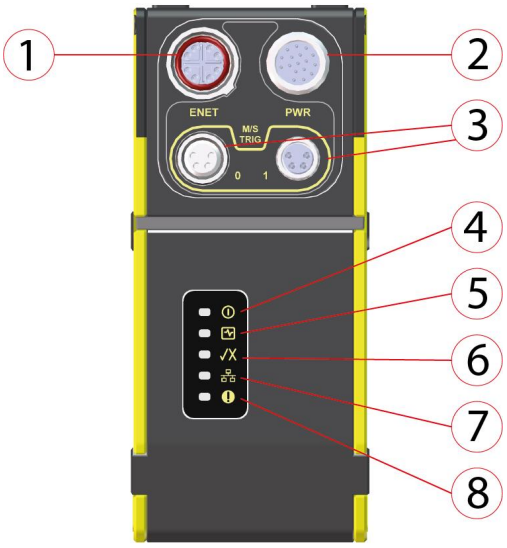


| Number | Component | Description |
|---|---|---|
| 1 | ENET Connector | Connects the Ethernet cable, which provides 10/100/1000 Ethernet connectivity. For more information, refer to *Ethernet Cable* on page 38. |
| 2 | PWR Connector | Connects the Breakout cable, which provides connections to an external power supply, the acquisition trigger input, general-purpose inputs and high-speed outputs. For more information, see *Breakout Cable* on page 39. |
| 3 | M/S TRIG Connectors | Not supported. |
| 4 |  | **Power**<br>• Hardware driven, this LED is always ON. |
| 5 |  | **Laser Status**<br>• **ON**: This LED is on when the vision system performs acquisition, and stays on until the acquisition is complete and a final profile is acquired for a given image.<br>• **OFF**: No acquisition is in progress |
| 6 |  | **Pass/Fail**<br>• GREEN or RED when active. You can configure the meaning of this LED in your In-Sight job. |
| 7 |  | **Ethernet status**<br>• **OFF**: The vision system does not detect Ethernet connection.<br>• **ON**: Ethernet connection was established.<br>• **Blinking**: Data transmission is in progress. |
| 8 |  | **Status**<br>• **GREEN**: The vision system is online and running.<br>• **Blank**: The vision system is offline |

# Working Distances and Fields of View

The working distance is the distance from the vision system lens to the part. The field of view is what the vision system can see at that distance. As the working distance increases, so does the field of view.

The minimum working distance is the Clearance Distance. The maximum working distance is the Clearance Distance plus the Measurement Range.

The field of view is represented by the blue trapezoid. The Near and Far Fields of View are the minimum and maximum values.

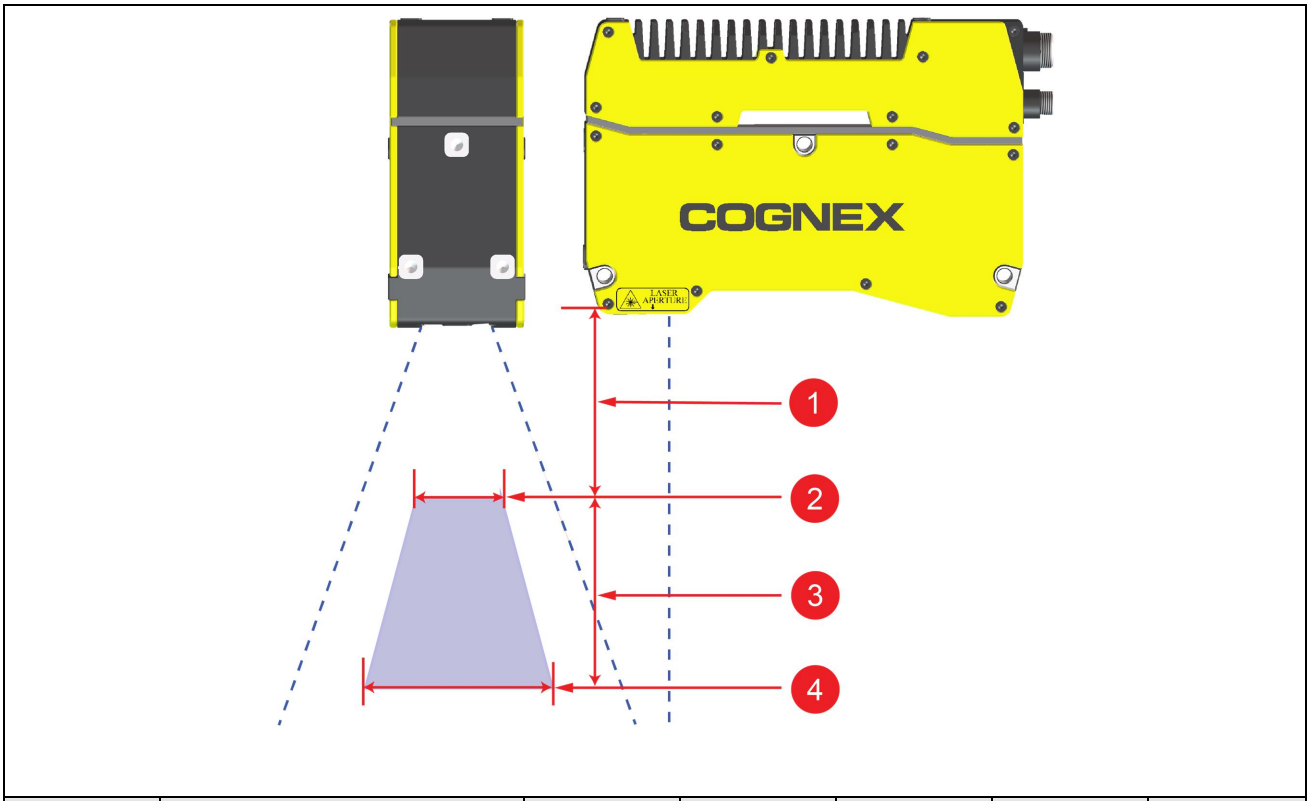


| Number | Specification | L38-33 | L38-50 | L38-100 | L38-300 | L38-500 |
|---|---|---|---|---|---|---|
| 1 | Clearance Distance (mm) | 93 | 92 | 130 | 180 | 600 |
| 2 | Near Field of View (mm) | 33 | 55 | 75 | 95 | 405 |
| 3 | Measurement Range (mm) | 44 | 106 | 235 | 745 | 1100 |
| 4 | Far Field of View (mm) | 39 | 90 | 180 | 460 | 1082 |

# Theory of Operation

This section gives a brief overview about the theory of operation.

## Operation of the Triangulation Sensor

A triangulation sensor measures objects by imaging the intersection of a uniform planar light source and an object. The sensor projects a sheet of light through a measurement area. The vision system captures this area at an angle, out of the plane of the sheet. When an object passes through the sheet, a laser stripe appears on the object's visible surface, which is imaged onto the detector. The software reduces the image data to a representative profile. Profiles are combined into a point cloud which contains 3D information (height, volume, etc).

The properties of the major elements of the system determines the sensitivity and accuracy of the measurement. The light source is a laser with a large divergence in one axis (20 - 40 degrees) and minimal divergence and extent in the perpendicular axis. Since the object plane is angled relative to the camera, you have to position the camera sensor to achieve optimal focus across the field.

When the vision system reads the image from the system, the image is then processed to

- Detect the line and determine its location
- Calibrate the line's position
- Assemble the calibrated profile data

**Note**: There are certain image distortions that derive from the fact that the vision system has a fixed-point aspect, has a lens, and the object is moving under the unit. However, In-Sight Vision Suite uses the calibrated profile data from the vision system (factory calibrated in manufacturing). As a result, the point cloud does not show unwanted optical effects.

# Raw 2D Images

The following overview illustrates how the vision system captures the raw 2D images, which is the first step in acquiring a point cloud.

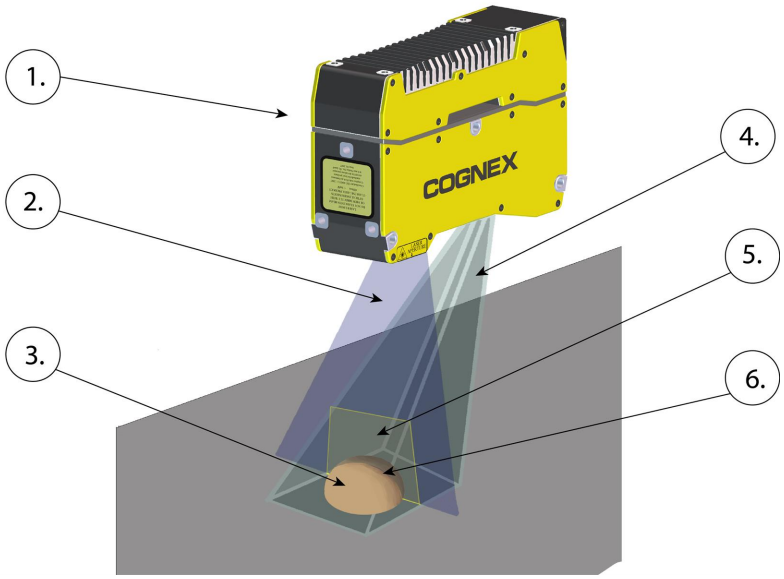


| Number | Element |
|---|---|
| 1. | In-Sight L38 |
| 2. | Laser plane |
| 3. | Inspected object |
| 4. | Camera field of view |
| 5. | Working section |
| 6. | Laser stripe |

The vision system (1) projects a triangular laser plane (2) onto the object under inspection (3), illuminating the object's surface. The illumination of the laser plane determines the peak data of the raw 2D image and results in the L38's laser stripe (6) within its field of view (4). The surface of the object determines the shape of the laser stripe, which provides the exact height profile information of the object; see the illustration below.

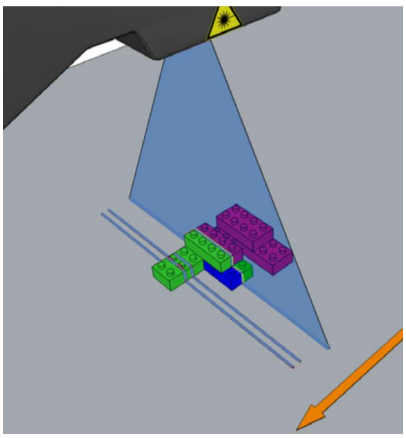

The following image illustrates the laser stripe as seen from the position of the vision system (on the left). The raw 2D image is what the vision system sees (on the right).

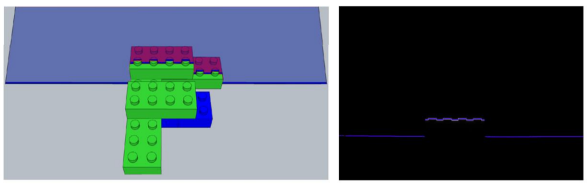

The vision system then applies an algorithm to find the peaks to extract the uncalibrated peak data. On the image below, the CYAN BLUE lines represent a subregion of the field of view working section (see *Working Distances and Fields of View* on page 12), where the vision system is looking for peak data. You can replace the subregion in the In-Sight Vision Suite. The PURPLE stripe at the lower section of the image is created by the software and marks the peak of the uncalibrated data.

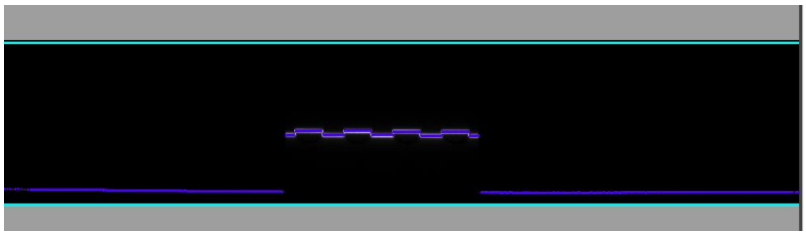

# Point Cloud

A point cloud is generated from a series of uncalibrated peak data. For example, the image below shows a raw 2D image from a single intensity scan.

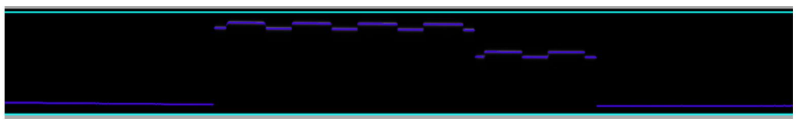

Each pixel value in the raw 2D image is mapped to a height value based on its intensity value, as seen on the image below.

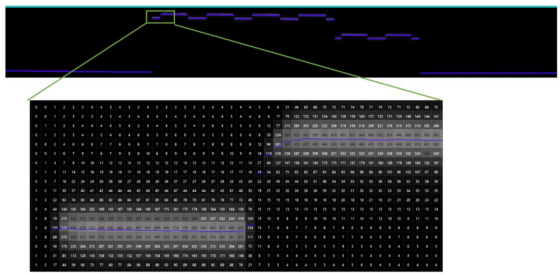

Factory calibration transforms the uncalibrated peak data into real-world coordinates and removes distortions such as camera lens and perspective. This creates a profile which represents the physical contours of the object. The image below shows a series of profiles.

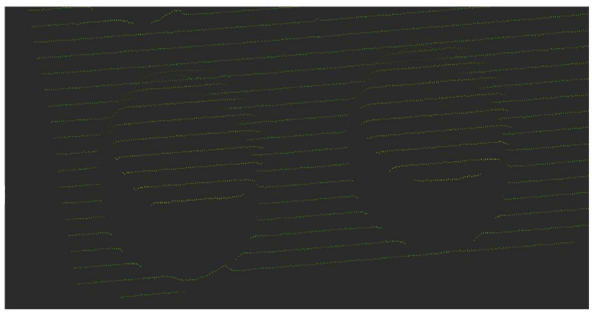

These profiles are assembled to create an image of the whole object. This is called a point cloud. The image below shows an example.

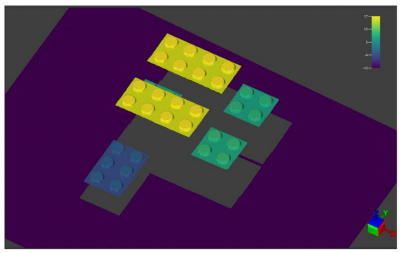

## Invisible Points

As the vision system views the object at a fixed angle from the laser plane, certain areas of the object under inspection may be hidden from the vision system. The shape of the object blocks the laser from hitting some areas. By default, the missing values appear as empty spaces in the point cloud.

The grey areas on the image below are invisible because they are hidden from the camera by the inspected object.

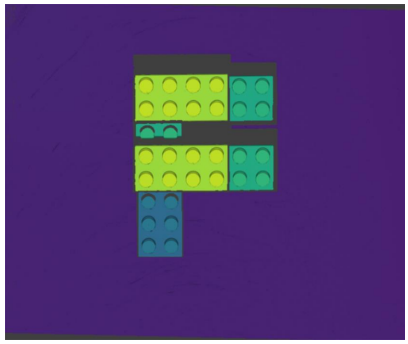

# Compensation of Perspective

Due to its position, a laser stripe that is closer to the vision system appears closer and wider in the raw profile image. This introduces perspective: a distortion in the uncalibrated peak data.

The following image illustrates the effect of perspective distortion with two laser stripes of the same width.

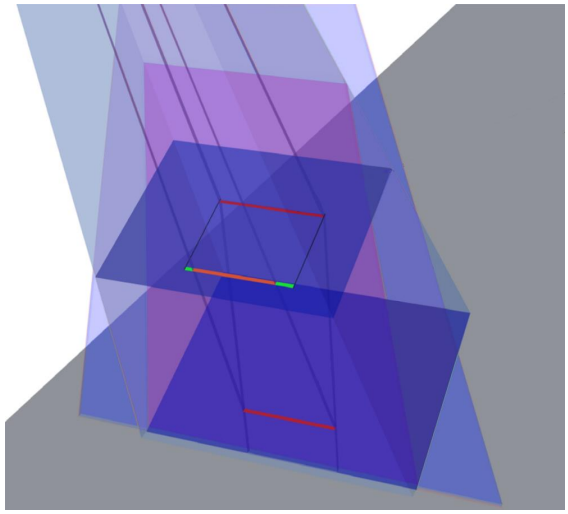

Although the two RED stripes have the same width, the lower one seems narrower.

The ORANGE stripe shows the width of the lower RED stripe, relative to the upper RED stripe. The GREEN portions show the difference between the two widths.

Consider a Lego® block scanned by the vision system. As it passes under the camera, the laser stripe appears for each step.

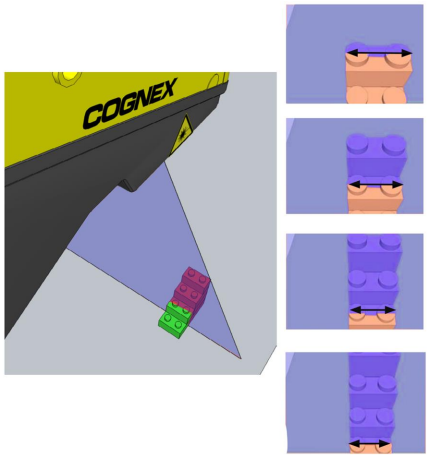


If the vision system produced an uncalibrated image, the image would look like the colorized image below.



Factory calibration converts the distorted image into the calibrated image. The calibrated image then allows the calculation of parameters like the exact volume of the object. The image below shows the top view (left) and the perspective view (right).

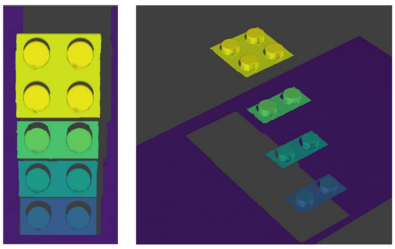

# Field Correction

Field correction is a semi-automatic and user-friendly process that helps with setting up your L38 vision system and ensuring accurate measurements.

Field correction uses a Cognex-specific correction target to adjust for typical mounting variations in the application, such as misalignment in the displacement sensor head or unknown encoder resolution. Field correction guides you through scanning the target and automatically compensates for the following deviations:

- Automatically adjusts the point cloud acquisition to any encoder that is connected to the system.
- Corrects misalignments that can happen during mounting on all three axes if the camera coordinate system is not perfectly aligned with the direction of motion. This allows you to acquire a point cloud and perform measurements from an optimal camera alignment without having to adjust the camera mount.

When the L38 is mounted on a frame, the vision system and the motion stage is not 100% aligned:

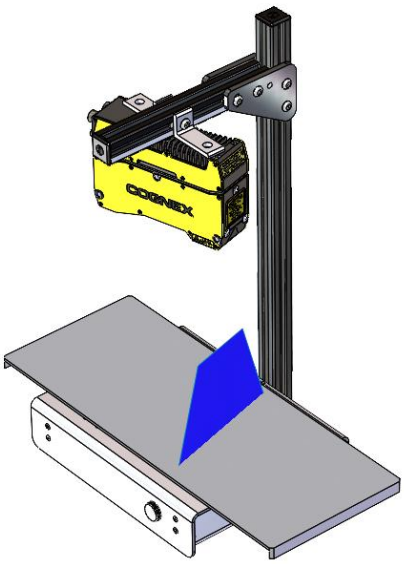


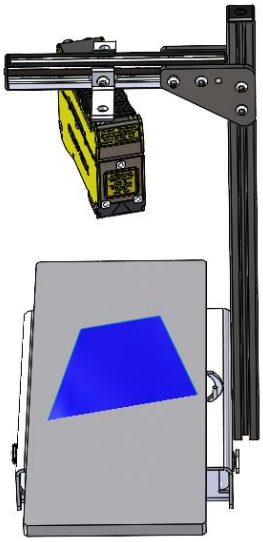

To produce a precise 3D image of a scene, it's essential to correct the relative motion between a vision system and a motion stage, involving motion direction, motion speed, and alignment of the three axes. Failure to address motion direction and speed can result in skewed, distorted, elongated, or compressed scanned images. Proper alignment of the three axes is crucial to avoid distortions in the overall image.

The following images are without field correction:

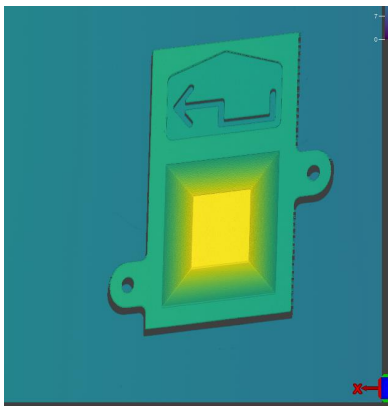

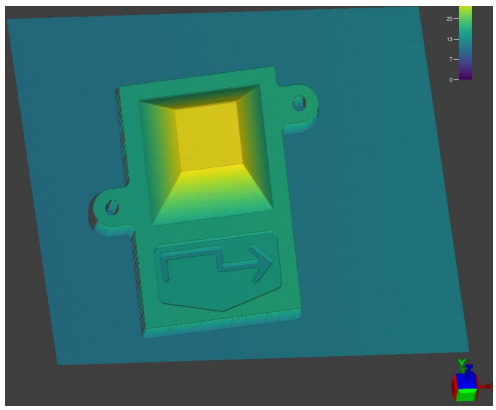

The following images are corrected with field correction:

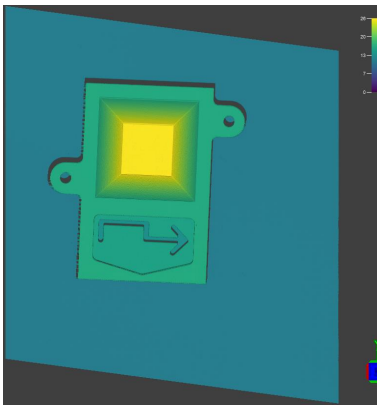

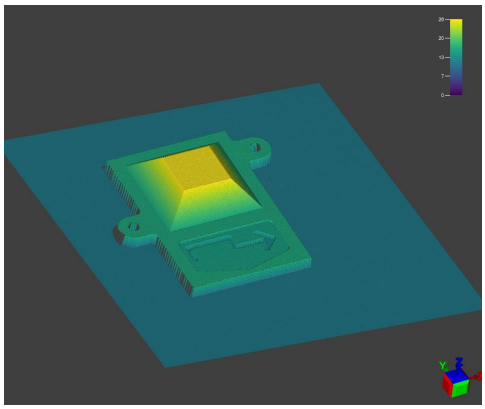

For more information about field correction settings, see the *Correction Settings* section in the *In-Sight 3D Spreadsheet Help* document.

The L38 can correct the following degrees of misalignment:

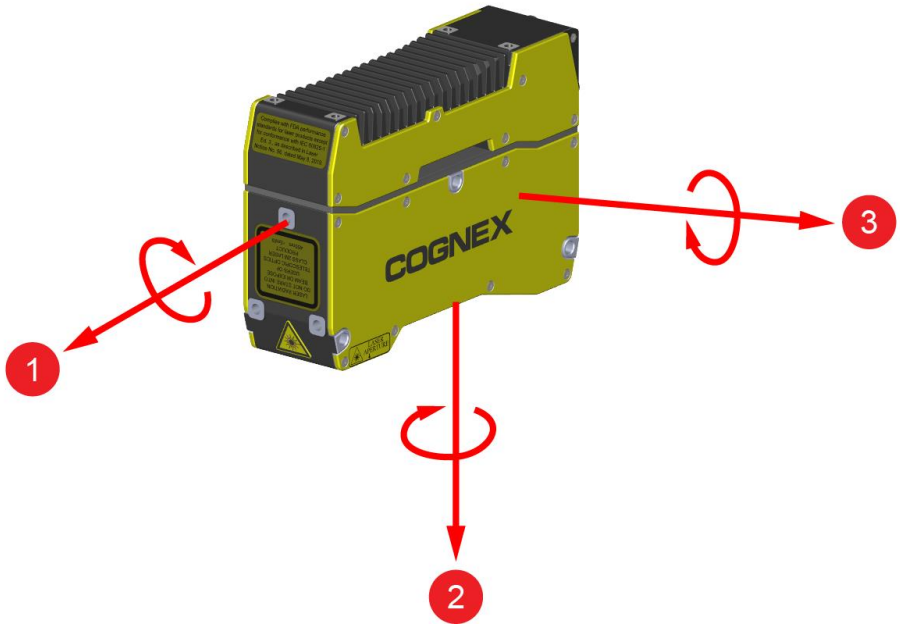


| Number | Description |
|---|---|
| 1 | Roll: 5 degrees |
| 2 | Yaw: 10 degrees |
| 3 | Pitch: 5 degrees |

# Scanning and Processing Time

After the vision system finishes a scan, it sends the scanned point cloud to the Spreadsheet for processing. While the transfer is in progress, the vision system can already start a second scan, which can run while the software is processing the first point cloud. So, the vision system can scan a second point cloud while the first point cloud is still under inspection.

To avoid dropping point clouds in case of multiple consecutive acquisitions, ensure that the inspection time is smaller than the time between the acquisitions. You can use the following Spreadsheet functions to help with timing:

- GetAllTime(A0):
  Returns the time from when the software receives the first scan line until the processing is complete.
- GetScanTime(A0):
  Returns the time it takes for the vision system to scan a part, as measured by the hardware.
- GetTime(A0):
  Returns the time from when the software receives the first scan line until the point cloud is fully available for processing.

  **Note**: Usually a short delay occurs between the start of GetTime(A0) and the start of GetScanTime(A0) because it takes some time for the software to receive the first scan line. Also, GetScanTime(A0) stops when the vision system stops scanning but GetTime(A0) includes the short time after the scanning used for preparing the point cloud for processing.

The status of the vision system (online or offline) affects the acquisition time, or GetTime(A0). When the vision system is online, transferring a scan to the software can take about 5–15 ms. When the vision system is offline, it can take about 100 ms to start processing. GetTime(A0) takes some extra time while offline, because the system performs some additional steps to allow the user to be able to modify filter settings after the acquisition.

**Note**: To calculate processing time, use `GetTime(ORIGIN:END)`, choosing a Spreadsheet cell range that includes your tools but does not include A0.

The figure below shows a timeline where the online vision system and the software go through the following steps:

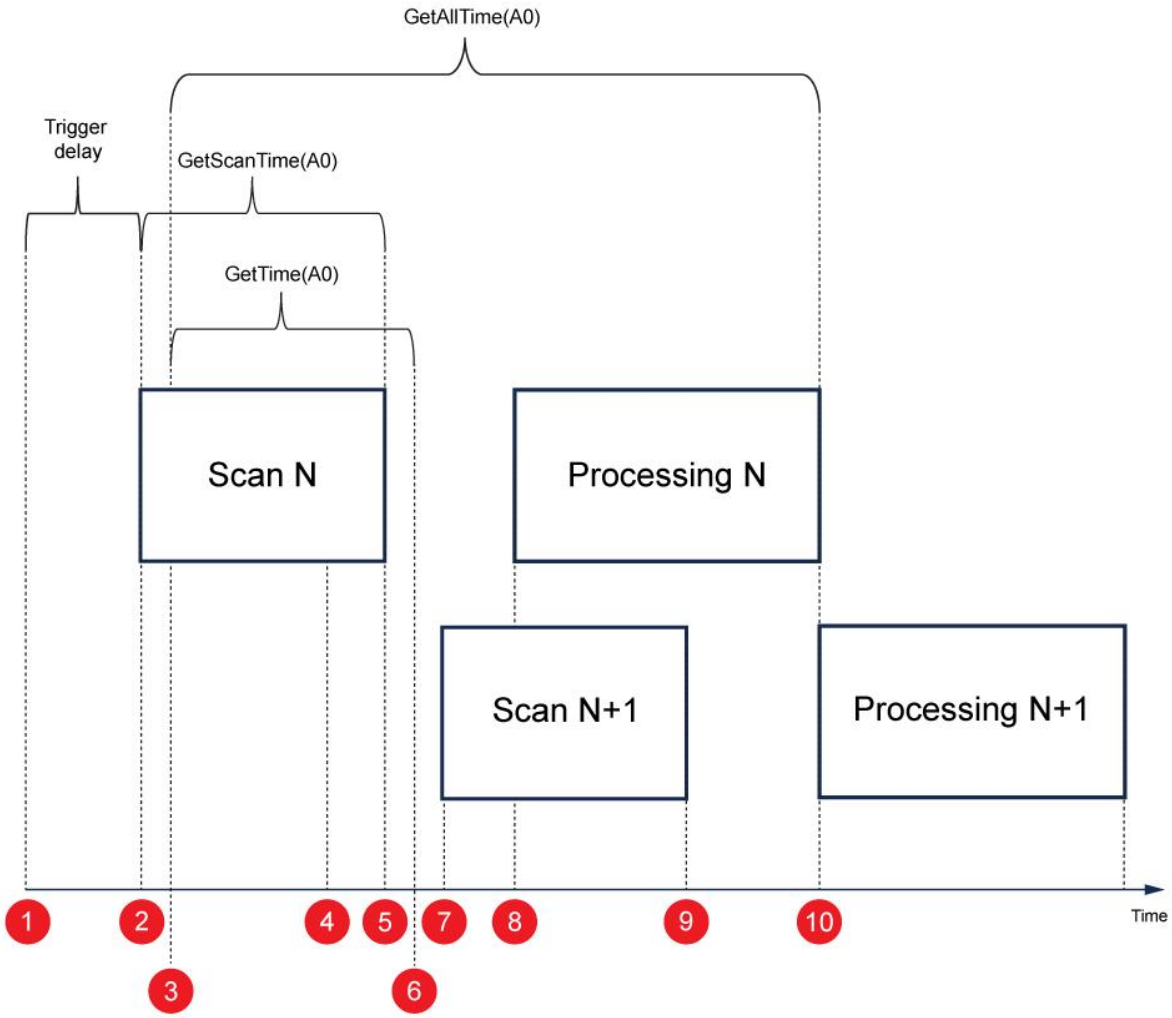


1. The vision system is triggered to start a scan.
2. The vision system starts scanning after a short configurable trigger delay.
3. The software receives the first packet from the scan (timestamped).
4. The vision system is triggered to start a second scan.

> **Note**: The second trigger can be sent while the first scan is in progress if the second trigger, factoring in the trigger delay, arrives after finishing the first scan.

5. The vision system finishes the first scan.
6. The vision system finishes the point cloud and sends it to the software for processing.
7. The vision system starts scanning the next part (timestamped) after the trigger delay from the second trigger elapses.

8. The software starts processing.

> **Note**:
> The start of processing is delayed if the processing of the previous acquisition is still in progress, as the In-SightL38 can only process one acquisition at a time.
>
> To calculate the time in the queue for processing, use the following formula:
>
> `GetAllTime(A0) - GetTime(A0) - GetTime(ORIGIN:END)`
>
> where `GetTime(ORIGIN:END)` is the processing time for the tools contained in the specified Spreadsheet cell range.

9. The second scan finishes, the vision system prepares the second point cloud, and sends it to the software.
10. The first processing executes the last Spreadsheet cell (timestamped) and the software immediately starts the second processing.

> **Note**:
> - GetAllTime(A0) shows the time between step 3 and 10.
> - GetScanTime(0) shows the time between steps 2 and 5.
> - GetTime(A0) shows the time between steps 3 and 6.
>
> The time shown in the bottom right of the Spreadsheet is GetTime(A) and the processing time added together without the gap in between.

# Unit Conversions

When using the In-Sight L38, you need to convert some units while working with multiple 2D/3D tools. The values you enter a 2D tool must be in pixels and in the correct coordinate system.

**Example:**

1. *3D Tool:*
   - ***Input:*** Real world units (right-handed coordinate system)
   - ***Output:*** Real world units

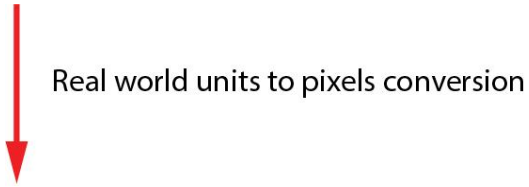


2. *2D Tool:*
   - ***Input:*** Pixels (left-handed coordinate system)
   - ***Output:*** Real world units

> **Note**: This conversion is applicable only on specific 2D outputs, like the gray scale (intensity) image.

Moving from a 2D tool to a 3D one does not require any conversions. You need to go through this procedure only when using two 2D tools subsequently, or switching from 3D to 2D.

For more information, see the *Unit Conversions* section in the *In-Sight 3D Spreadsheet Help* document.

# Installation

Read this section to learn how the vision system connects to standard components and accessories. For a list of options and accessories, contact your Cognex sales representative.

**Note**: Cables are sold separately.

**CAUTION**: All cable connectors are keyed to fit the connectors on the vision system. Do not force the connections or damage may occur.

See the list of *Cables* on page 8.

## Mount the Vision System

In order to operate the vision system accurately, make sure to mount the In-Sight L38 firmly and perpendicular to the motion of travel. This way, the acquired point clouds are repeatable and accurate.

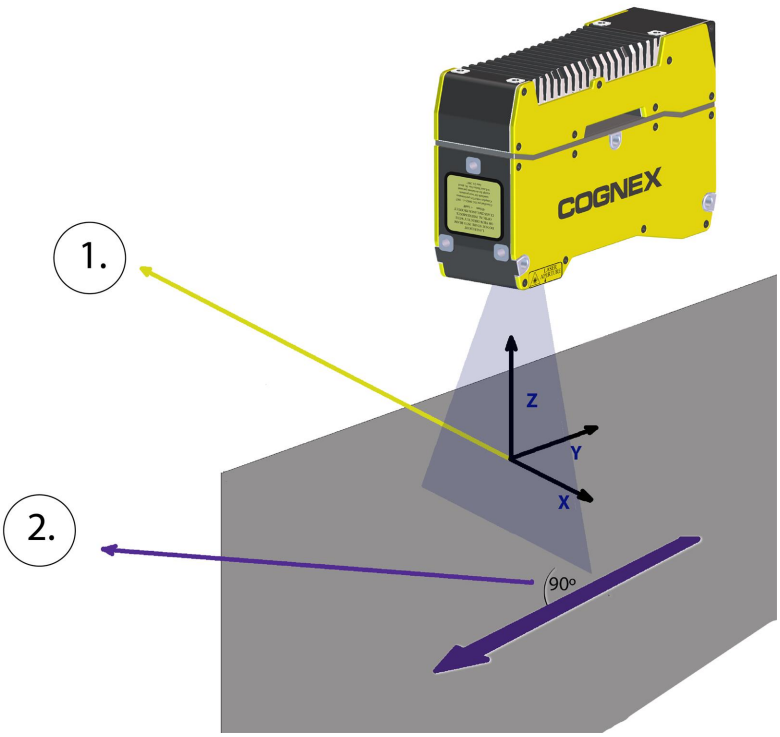


| Number | Guideline |
|---|---|
| 1. | The origin of the X-axis is the optical centerline of the sensor projected onto the Working Section. |
| 2. | Arrange the vision system in a way so that the motion of travel is perpendicular to the laser plane. |

**Note**: The vision system can shut down above maximum operating temperature. To avoid overheating, Cognex recommends to use a heatsink when the operating temperature of the vision system exceeds 35ºC (95ºF). To do so, attach a 400 mm aluminum profile or surface of a thermally conductive material (for example robot mounting plate) on top of the unit.

# Mount the Vision System: Top Housing

1. Align the holes on the mounting surface with the mounting holes on the vision system.
2. Insert the M4 screws into the top mounting holes and tighten. The maximum torque is 2.00Nm (17.70in-lb). Do not exceed the maximum insertion depth of 8 mm for the M4 screws. The maximum insertion depth does not include the thickness of the mounting material.




**Mounting the L38-33, L38-50, L38-100, and L38-300**




**Mounting the L38-500**

## Mount the Vision System: Rear Housing

1. Align the holes on the mounting surface with the mounting holes on the vision system.
2. Insert the M5 screws into the rear mounting holes and tighten. The maximum torque is 3.00 Nm (26.55 in-lb). Do not exceed the maximum insertion depth of 8 mm for the M5 screws.. The maximum insertion depth does not include the thickness of the mounting material.




**Note**: There is no rear mounting option for the L38-500.

## Mount the Vision System: Through-Body

**Note**: Through-body mounting is recommended for operating temperatures between 35°C and 45°C.

1. Insert M4 screws (or appropriate hardware) through the 5 mm holes on the vision system.
2. Attach the screws to a mount to prevent the vision system from shifting during operation. The maximum torque is 2.00 Nm (17.70 in-lb).




**Mounting the L38-33, L38-50, L38-100, and L38-300**

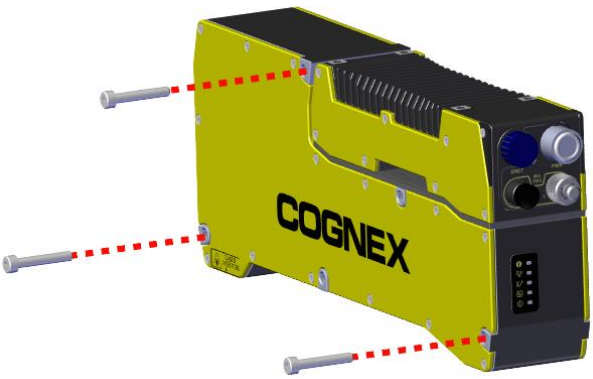


**Mounting the L38-500**

**Note**: For the L38-500 through-body mounting, only use three of the five mounting points. The image shows the preferred mounting. Cognex suggests mounting the device to the three mounting point reference surfaces and leaving the other two unused surfaces floating.

# Connect the Ethernet Cable

**CAUTION**: The Ethernet cable shield must be grounded at the far end. Whatever this cable is plugged into (typically a switch or router) should have a grounded Ethernet connector. A digital voltmeter should be used to validate the grounding. If the far end device is not grounded, a ground wire should be added in compliance with local electrical codes.

1. Connect the Ethernet cable's M12 connector to the vision system ENET connector.
2. Connect the Ethernet cable's RJ-45 connector to a switch, router or PC, as applicable.

# Connect the Breakout Cable

For more information, see *Breakout Cable* on page 39

**CAUTION**: To reduce emissions, connect the far end of the Breakout cable shield to frame ground using the exposed drain wire.

**Note**:
- Perform wiring or adjustments to I/O devices when the vision system is not receiving power.
- You can cut exposed wires short or trim wire ends. You also can tie the wires back if you use a tie made of non-conductive material. Keep bare wires separated from the +24 V DC wire.

1. Verify that the 24 VDC power supply is unplugged and not receiving power.
2. To make sure the laser functions correctly, make sure that the LASER ENABLE (WHITE/Violet wire) and IN COMMON (GREEN wire) are connected:
   - For NPN lines, connect LASER ENABLE to +24 V DC and connect IN COMMON to ground.
   - For PNP lines, connect LASER ENABLE to ground and connect IN COMMON to +24 V DC.

   **Note**: The IN COMMON signal is shared with the TRIGGER and LASER ENABLE inputs. Therefore, the operating mode (NPN or PNP) must be identical for both ports. The voltage difference between the TRIGGER or LASER ENABLE inputs and IN COMMON needs to be at least 10 V to turn the input on and less than 3 V to turn the input off.

   **CAUTION**: If LASER ENABLE is not wired properly, the laser will not turn on after triggering the vision system. This will result in BLACK profile images and the In-Sight 3D software will not generate a point cloud.
3. Optionally, connect the I/O wires to an appropriate device.
4. The PHA+ (BROWN wire) and PHA- (WHITE/BROWN wire) and PHB+ (YELLOW wire), PHB- (WHITE/YELLOW wire) are used for an encoder connection. Make sure to configure your sensor using the In-Sight 3D software to define how these lines are used.

   **Note**:
   - The encoder signals are referenced to the same GND as the 24 VDC power. If the encoder uses a different power supply from the 24 VDC supply, the encoder supply and the 24 VDC supply need to have a common GND connection.
   - Cognex recommends to ground unused encoder connections. If you configure the In-Sight 3D software to use an encoder but do no connect the encoder signal inputs, the behavior of the encoder counter is undetermined.

5. Attach the Breakout cable's +24 VDC (Red wire) and GND (BLACK wire) to the corresponding terminals on the power supply.

   ⚠ **CAUTION**: Never connect voltages other than 24 VDC. Always observe the polarity shown.

6. Connect the Breakout cable's M12 connector to the vision system PWR connector.
7. Restore power to the 24 V DC power supply and turn it on if necessary.

# Powering the Vision System

The L38 has no dedicated power switch. The vision system powers on when you connect a power supply through a breakout cable.

When the vision system is on, the Power LED on top of the unit will turn GREEN.



# Using Your In-Sight Vision System

This section provides information on the installation of the In-Sight Vision Suite, trigger types, and protocols.

## Installing the In-Sight Vision Suite

Follow the steps below to install and connect your vision system to the In-Sight Vision Suite.

1. Download the latest version of the In-Sight Vision Suite from support.cognex.com/ and follow the on-screen steps.
2. Connect the L38 series vision system to your PC.
3. Launch the In-Sight Vision Suite and click **Refresh**.
4. Select a vision system from the list and click **Connect**.

# Cleaning and maintenance

This chapter gives an overview about the cleaning and maintenance of the vision system.

## Clean the Housing

To clean the outside of the vision system housing, use a small amount of mild detergent cleaner or isopropyl alcohol on a cleaning cloth. Do not pour the cleaner on the vision system housing.

⚠ **CAUTION**: Do not attempt to clean any In-Sight product with harsh or corrosive solvents, including lye, methyl ethyl ketone (MEK) or gasoline.

## Window Maintenance

The windows of the vision system and laser must be kept clean and free of defects to ensure proper operation. Any scratches, dust or dirt will impact the accuracy of acquired images.

⚠ **CAUTION**: Use care not to damage the anti-reflective coating on the windows.

Cognex makes the following recommendations for cleaning the laser and vision system windows:

- Unplug the unit so the laser cannot be enabled.
- Use lint-free tissue or an optical grade cotton swab ("Q-tip").
- Use reagent-grade isopropyl alcohol.
- Use minimal pressure.
- Use several tissues or swabs.
- Start at the center of each window and spiral out to the edges.
- Rotate the tissue or swab during cleaning so dirt is not dragged across the surface.

# Vision System Specifications

| Specification | L38-33 | L38-50 | L38-100 | L38-300 | L38-500 |
|---|---|---|---|---|---|
| Scan rate | Full X resolution up to 7.5 kHz<br>Binned mode up to 10-11 kHz | | | | |
| Resolution X-axis | 1920 points/profile | | | | |
| Built-in I/O | **Inputs**: 1 dedicated trigger, 1 laser safety<br>**Outputs**: 2 user-definable | | | | |
| Encoder Input Specification | Differential: A+/B+/A-/B-: 5-24 V (1000 kHz max)<br>Single Ended: A+/B+: 12-24 V (1000 kHz max) A-/B-: $V_{encoder}/2$ (6-12 V DC) | | | | |
| Network Communication | • Gigabit Ethernet interface<br>• Integrated link and traffic LED<br>• Standard M12-8 X-Coded female connector | | | | |
| Power Consumption | 24 V DC ±10%, 750 mA maximum. | | | | |
| Dimensions | 150.5 mm x 101 mm x 45 mm | | | | 250.5 mm x 101 mm x 45 mm |
| Weight | 0.94 kg | | | | 1.28 kg |
| Operating Temperature | 0ºC to 45ºC (32ºF to 113ºF) | | | | |
| Storage Temperature | 20ºC to 70ºC (-4ºF to 158ºF) | | | | |
| Operating and Storage Humidity | <80%, non-condensing Specification | | | | |
| Protection | IP65 with all cables properly attached and M/S TRIG connectors capped.<br>Altitude: 2000m, indoor use only, pollution degree II | | | | |
| Shock (Shipping and Storage) | 15 G's, 6 milliseconds half sinusoidal | | | | |
| Vibration (Shipping and Storage) | 10 to 57 Hz, double amplitude 1.5 mm X,Y,Z, 3 hours in each direction | | | | |
| Certification | CE, FCC, KCC, TÜV SÜD NRTL, RoHS | | | | |

# L38-33, L38-50, L38-100, and L38-300 Dimensions

**Note**:

- All Dimensions are in millimeters [inches] and are for reference purposes only.
- All specifications are for reference purposes only and can change without notice.

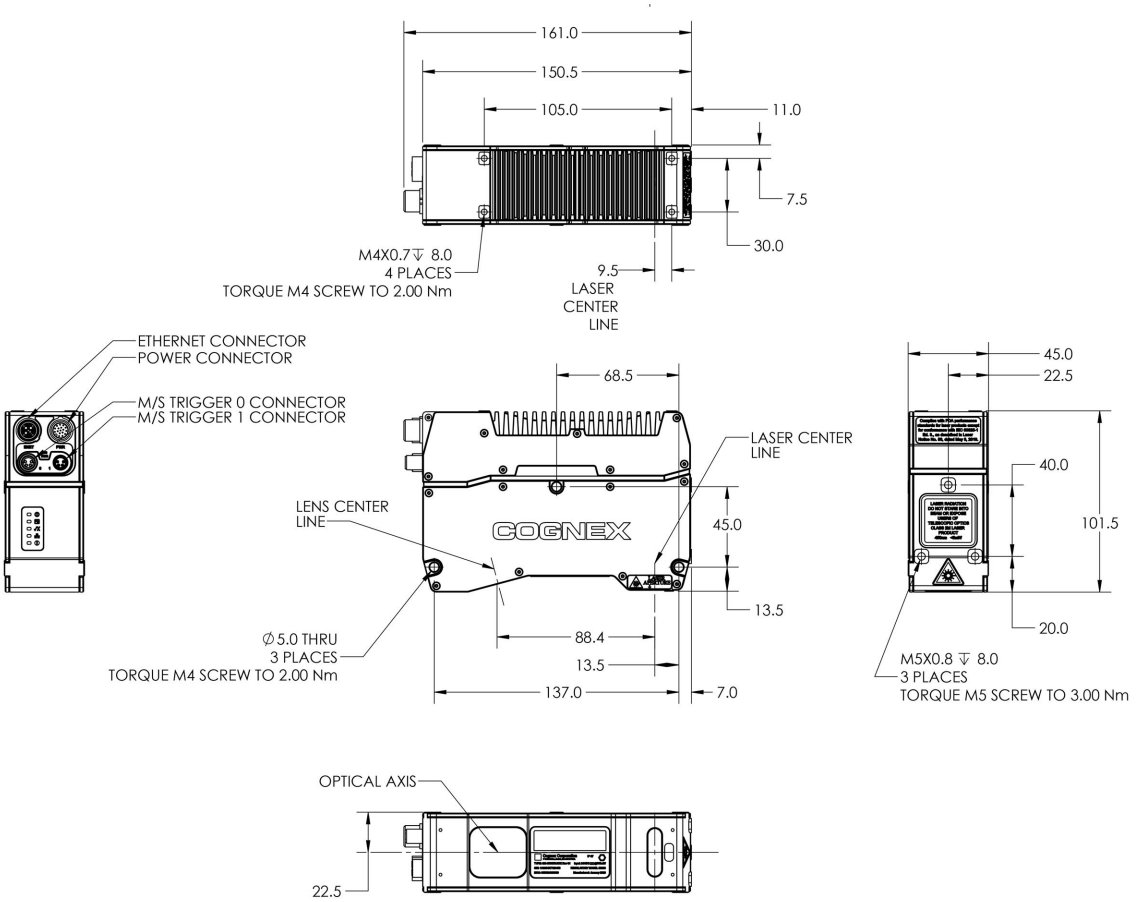

# L38-500 Dimensions

**Note**:

- All Dimensions are in millimeters [inches] and are for reference purposes only.
- All specifications are for reference purposes only and can change without notice.

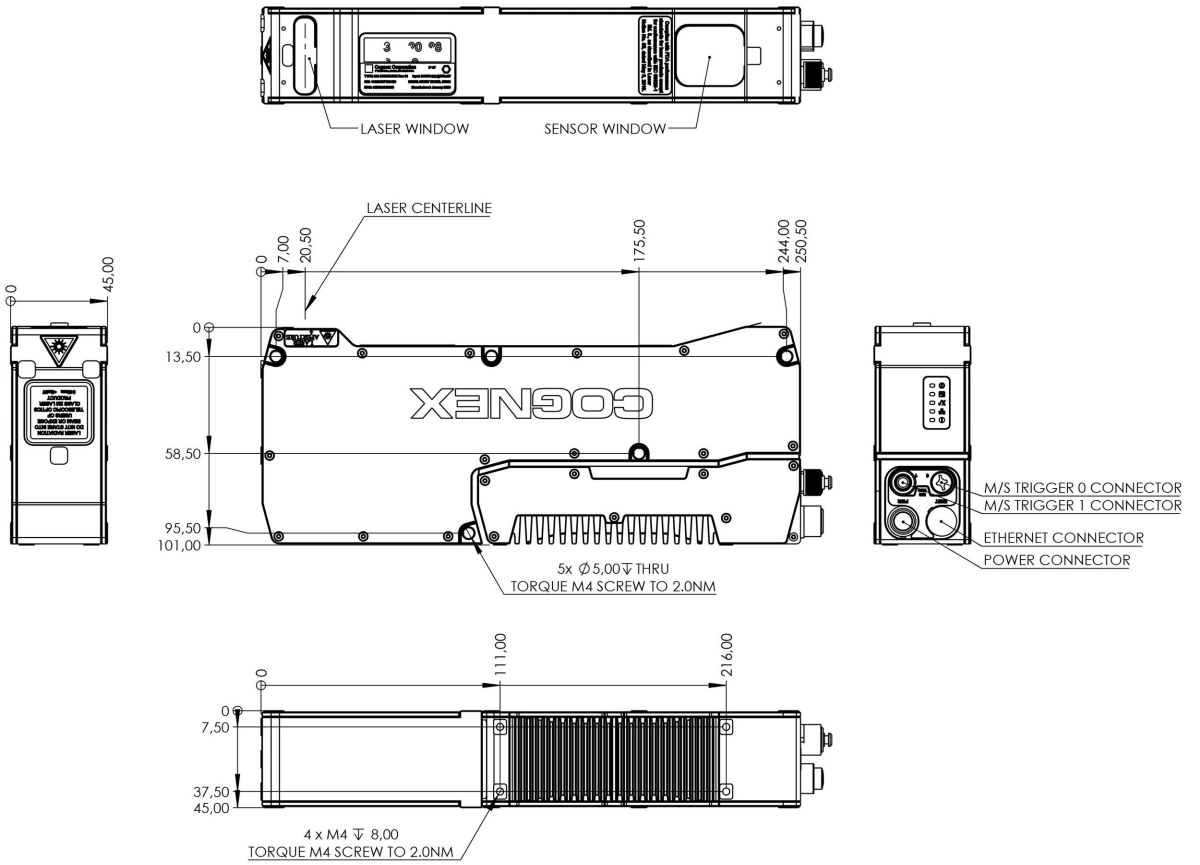

# Laser Specifications

This laser product has a Class 2 and Class 2M designation.

The table below summarizes environmental and power supply specifications for L38 series sensors:

| | Blue | Red | Blue HPLL | Red HPLL |
|---|---|---|---|---|
| Used in Models | • L38-33<br>• L38-50<br>• L38-100<br>• L38-300 | • L38-50<br>• L38-100<br>• L38-300 | • L38-500 | • L38-500 |
| Wavelength | 450 nm | 640 nm | 445 nm | 638 nm |
| Laser Class | 2M | 2M | 2 | 2 |
| Output Power | 4.7 mW | 4.4 mW | < 30 mW | < 30 mW |

## Laser Compliance

**WARNING**: Laser light, do not stare into beam: Class 2 and Class 2M laser products. Failure to follow these instructions may cause serious injury.

Cognex places the following labels on every L38 series vision system:

- Blue laser:

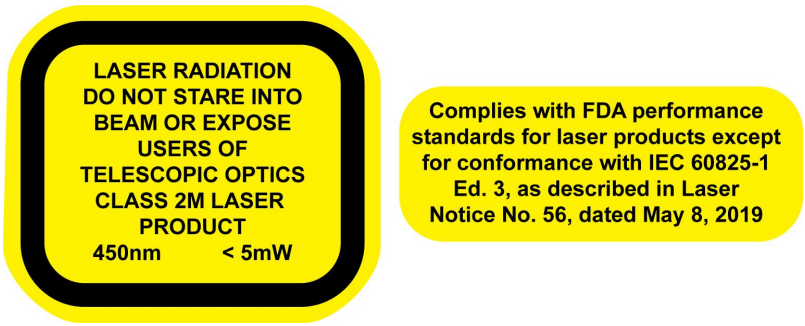

- Red laser:




Cognex places the following labels on every L38-500 vision system:

- Blue laser:




- Red laser:




Complies with FDA performance standards for laser products except for conformance with IEC 60825-1 Ed. 3, as described in Laser Notice No. 56, dated May 8, 2019.

**WARNING**: Use of controls or adjustments or performance of procedures other than those specified herein may result in hazardous radiation exposure.

| Blue Laser Specification | L38-33 | L38-50 | L38-100 | L38-300 | L38-500 |
|---|---|---|---|---|---|
| Wavelength | 445 nm +/- 10 nm | | | | |
| ½ Angle Beam Divergence along Y-Axis(mrad) | W0 2.40 | W0 1.54 | W0 0.93 | W0 0.80 | W0 0.50 |
| Beam Divergence along X-Axis | 32° | 32° | 32° | 32° | 40° |
| Pulse Duration | Varies to DC | | | | |
| Maximum Power | < 5 mW accessible power | | | | < 30 mW |

| Red Laser Specification | L38-33 | L38-50 | L38-100 | L38-300 | L38-500 |
|---|---|---|---|---|---|
| Wavelength | 638 nm +/- 10 nm | | | | |
| ½ Angle Beam Divergence along Y-Axis (mrad) | W0 2.40 | W0 1.54 | W0 0.93 | W0 0.80 | W0 0.50 |
| Beam Divergence along X-Axis | 32° | 32° | 32° | 32° | 40° |
| Pulse Duration | Varies to DC | | | | |
| Maximum Power | < 5 mW accessible power | | | | < 30 mW |

## Laser Safety Warnings

- Do not stare into the beam.
- Do not view directly with optical instruments (magnifiers).
- Do not place optical components (mirrors) into the beam.
- Ensure that the laser is used as intended. Prevent unattended use or misuse of the laser.
- Design test fixtures in such a way that unintentional viewing into the beam is prevented.
- Switch off the laser when not in use.
- Avoid the use of highly reflective materials in the path of the laser beam. If you cannot, angle the part so unintentional viewing of the reflection is prevented.
- Terminate (block) unused beams.
- Keep the laser plane horizontal or pointing downwards.
- Report any issues that may have an impact on laser safety to your supervisor or Laser Safety Officer.
- There is no scheduled maintenance necessary to keep the product in compliance.
- Under no circumstances should you operate the sensor if it is defective or the seal damaged. Cognex Corporation cannot be held responsible for any harm caused by operating a faulty unit.
- Under no circumstances should you modify in any way the sensor or its housing.
- Use of controls or adjustments or performance of procedures other than those specified herein may result in hazardous radiation exposure.
- When moving the unit from a very hot environment to a cold environment please allow the unit to equalize in a room temperature environment for 2 hours between temperature extremes.

# Label Locations

**WARNING**: Laser light, do not stare into beam: Class 2 and Class 2M laser products. Failure to follow these instructions may cause serious injury.

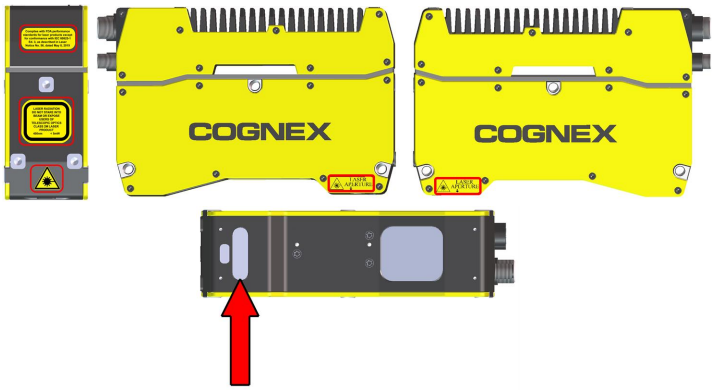


**Note**:
On the L38-500 variant, the FDA label is located in a different position, on the underside of the vision system:



**WARNING**: Avoid exposure - laser radiation is emitted from this aperture.

# Ethernet Cable

The Ethernet cable provides Ethernet connectivity to the vision system.

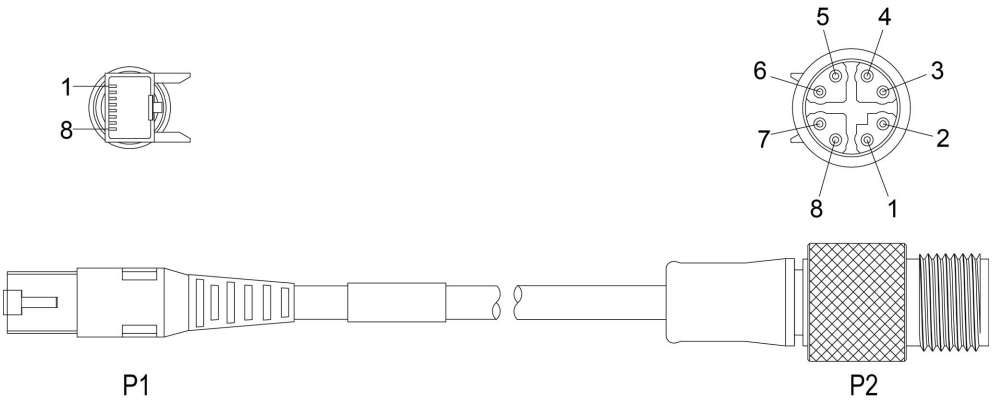


| P1 Pin Number | Wire Color | Signal Name | P2 Pin Number |
|---|---|---|---|
| 1 | WHITE/ORANGE | TxRx A + | 1 |
| 2 | ORANGE | TxRx A - | 2 |
| 3 | WHITE/GREEN | TxRx B + | 3 |
| 4 | BLUE | TxRx C + | 8 |
| 5 | WHITE/BLUE | TxRx C - | 7 |
| 6 | GREEN | TxRx B - | 4 |
| 7 | WHITE/BROWN | TxRx D + | 5 |
| 8 | BROWN | TxRx D - | 6 |

**CAUTION**: The Ethernet cable shield must be grounded at the far end. Whatever this cable is plugged into (typically a switch or router) should have a grounded Ethernet connector. A digital voltmeter should be used to validate the grounding. If the far end device is not grounded, a ground wire should be added in compliance with local electrical codes.

**Note**:

- Cables are sold separately.
- The wiring for this cable follows standard industrial Ethernet M12 specifications. It differs from the 568B standard.

# Breakout Cable

The Breakout cable provides access to trigger and inputs. You can clip unused wires short or use a tie made of non-conductive material to tie them back.

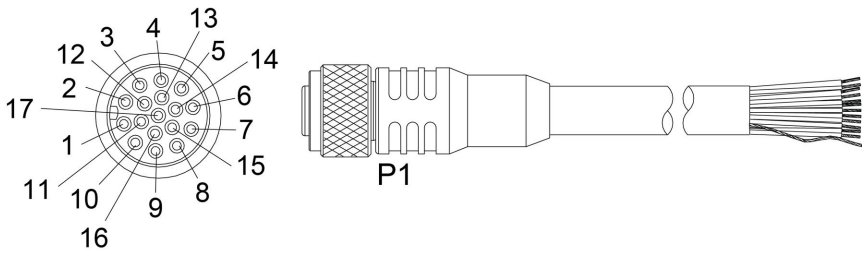


| Pin # | Signals Name | Color |
|---|---|---|
| 1 | PHB+ | YELLOW |
| 2 | PHB- | WHITE/YELLOW |
| 3 | PHA+ | BROWN |
| 4 | PHA- | WHITE/BROWN |
| 5 | TRIGGER | Violet |
| 6 | LASER ENABLE | WHITE/Violet |
| 7 | +24VDC | Red |
| 8 | GND | BLACK |
| 9 | IN COMMON | GREEN |
| 10 | OUT 0 | ORANGE |
| 11 | OUT 1 | BLUE |
| 12 | OUT COMMON | Grey |
| 13 | Reserved | WHITE/GREEN |
| 14 | Reserved | WHITE/ORANGE |
| 15 | Reserved | WHITE/BLUE |
| 16 | Reserved | WHITE/Grey |
| 17 | Reserved | WHITE/Red |
| SHELL | SHIELD | Braided Wire |

# Encoder Specifications

The vision system typically relies on electrical signals from an encoder to generate images, allowing the vision system to capture image information based on the speed of the moving object rather than predetermined acquisition timing. Many vision applications use a rotary encoder attached to the conveyor system.

Cognex provides encoders as accessories. For more information about the encoders that are available as accessories to the In-Sight L38, see *Encoders* on page 9.

**Note**:
- The frequency of encoder pulses must not exceed 1000 kHz.
- Using an encoder allows you to specify input and output delay values in pulse counts instead of real time units.

A quadrature rotary encoder uses two output channels (A and B) to provide cyclical outputs as the encoder rotates. The signals are *quadrature* outputs - 90 degrees out of phase with each other. Each complete quadrature cycle consists of four rising or falling *pulse* edges. The number of cycles per encoder rotation depends on the specific encoder you use.

**Note**: A single-channel encoder only uses the A channel.

**Signal A and B in Quadrature**

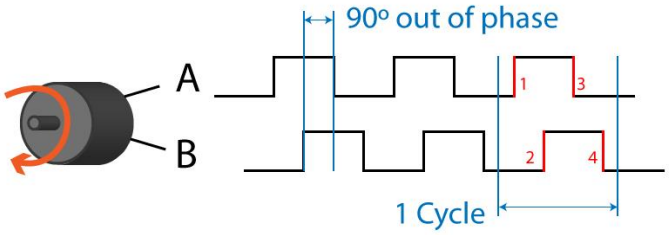


The distance per cycle is the physical distance that the conveyor system needs to travel to cause the encoder to output one full cycle. This distance can be calculated based on the dimensions of your encoder and the length of the image you want to acquire.

The vision system supports single-channel and quadrature encoders.

- Single-channel encoders generate only one signal (A). Be aware that single-channel encoders cannot determine which direction the conveyer system is moving.
    - Software features that manage encoder resolution do not apply to single-channel encoding.
    - A DS1000 sensor increments the encoder count by one for each complete encoder cycle.
    - A L38 sensor increments the encoder count by two for each complete encoder cycle.
- Quadrature encoders use two channels (A and B) to specify the direction of motion. L38 uses the following convention for determining the direction of motion:
    - Positive: PHA leads PHB
    - Negative: PHA lags PHB

## Encoder Inputs

The following image shows the encoder phase A and B inputs.

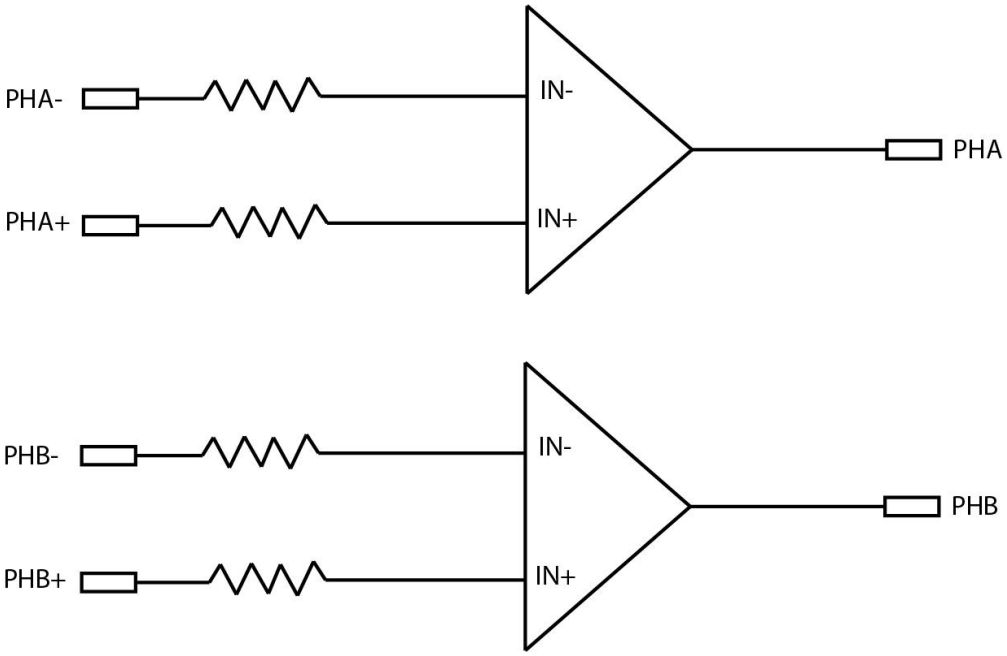


The encoder phase inputs can be driven with:

- Differential decoder (5 V - 24 V)
- Non-differential decoder (12 V - 24 V)

To create the required differential signal, you need a voltage divider when you use a non-differential decoder. See *Encoder Wiring* on page 41.

You can directly connect encoder drivers of RS-422 (±6 V) to the phase signals.

Input voltage requirements:

| Requirements | Minimum | Maximum |
|---|---|---|
| **Differential voltage threshold** | 4 V | 24 V |
| **Voltage range with respect to power supply GND** | 0 V | 24 V |

**Note**: If you are using a Single-Channel Encoder, always connect to the 'PHA' input.

**WARNING**: The frequency of pulses has to remain under 1000 kHz.

- Single-ended encoders use one wire each for signals A and B. Be aware single-ended encoders are susceptible to electrical noise. When using a single ended encoder, set the complementary differential inputs, A- and B-, to 1/2 of the encoder operating voltage (for example, 12 V for a 24 V encoder.) Use only 12 V or 24 V single ended encoders.
- Differential encoders use two lines each for signals A and B. Differential encoders greatly reduce susceptibility to electrical noise and they can be powered from 5 V to 24 V.

## Encoder Wiring

If your vision system is configured for encoder input, you can connect both differential and single-ended encoders. Using an encoder allows you to specify input and output delay values in pulse counts instead of real-time units.

- **Single-ended** encoder wiring:

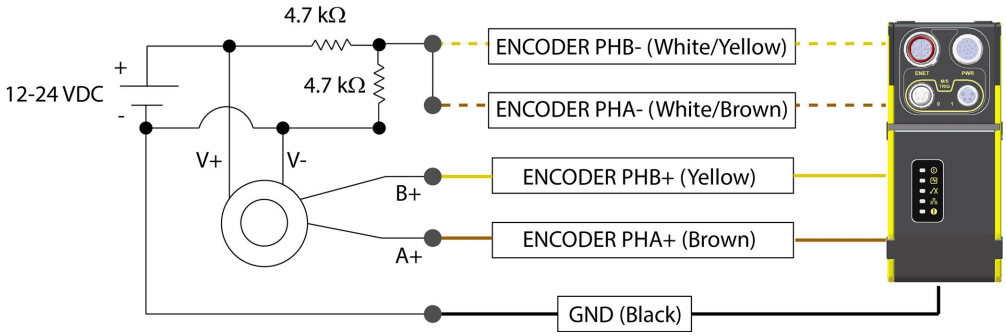


- **Differential** encoder wiring:

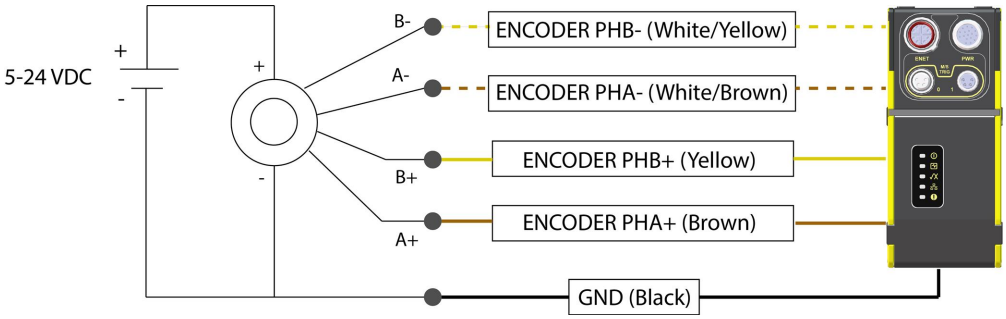


- **Single channel** encoder wiring:

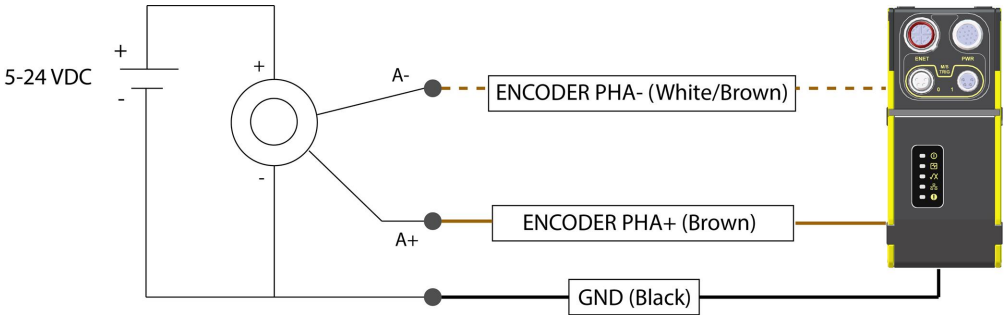


⚠ **CAUTION**: Encoder and power **MUST** share the same ground.

# Trigger and Laser Enable Inputs

The acquisition trigger and laser enable inputs to the sensor are opto-isolated. The sensor responds to a trigger event when the voltage difference between the TRIGGER and IN COMMON inputs exceed 10 V. The laser enable input is enabled when the difference between the LASER ENABLE and IN COMMON inputs exceed 10 V.

To configure the acquisition trigger and laser enable as NPN ´(current sinking) inputs, connect the TRIGGER and LASER ENABLE terminals to the output of the sensors and the IN COMMON terminal to the return of the sensor. The TRIGGER or LASER ENABLE terminal set to a high voltage level (12 V -24 V) causes the current flow through the LED emitter of the opto-isolator, turning on the corresponding opto-coupler output.

To configure the acquisition trigger and laser safety as PNP (current sourcing) inputs, connect the TRIGGER and LASER ENABLE terminals to the return of the sensors and the IN COMMON terminal to the sensor voltage reference (12 V-24 V). The TRIGGER or LASER ENABLE terminal set to ground level (12V – 24V) causes the current to flow through the LED emitter of the opto-isolator, turning on the corresponding opto-coupler output.

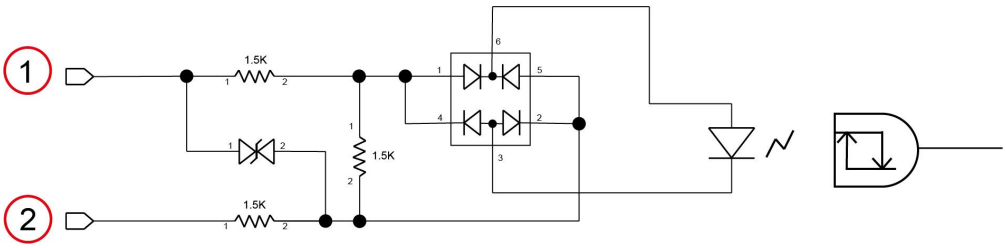


| Number | Input |
|---|---|
| 1 | **TRIGGER** |
| 2 | **IN COMMON** |

# Trigger and Laser Enable Wiring

The following table presents the wiring schematic of the trigger and the laser in NPN configuration:

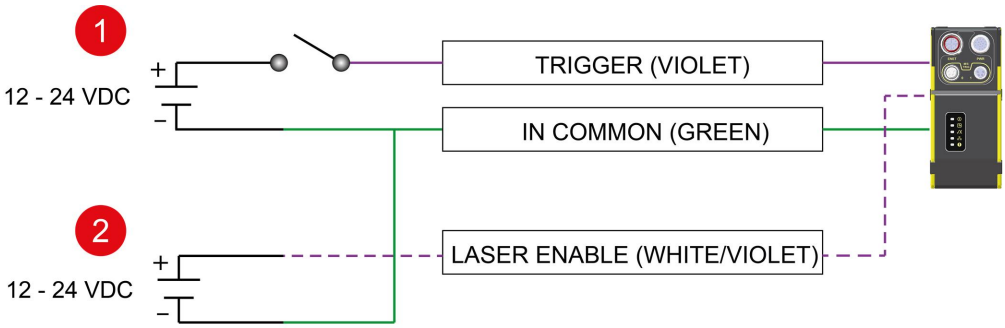


| Number | Component |
|---|---|
| 1 | Trigger (Sensor Sinks Current - NPN) |
| 2 | Laser Enable (Sensor Sinks Current - NPN) |

The following table presents the wiring schematic of the trigger and the laser in PNP configuration:

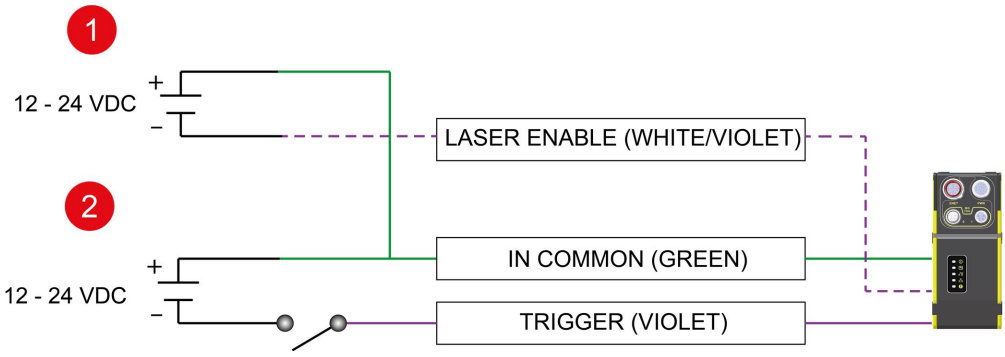


| Number | Component |
|---|---|
| 1 | Laser Enable (Sensor Sources Current- PNP) |
| 2 | Trigger (Sensor Sources Current - PNP) |

# Outputs

The optically isolated outputs are usable as either NPN ( current sinking, pull-down) or PNP (current sourcing, pull-up) lines.

In case of NPN lines, the external load is connected between the output and the positive supply voltage. The outputs pull down to less than 3 V when ON, which causes current to flow through the load. When the outputs are OFF, no current flows through the load.

The image below shows the process diagram: the opto-isolator (2) transfers electrical signals between the controller (1) and the outputs (Out Common -3, NPN Out - 4). The NPN Out (4) is protected by a PTC fuse (5) against overflowing current.

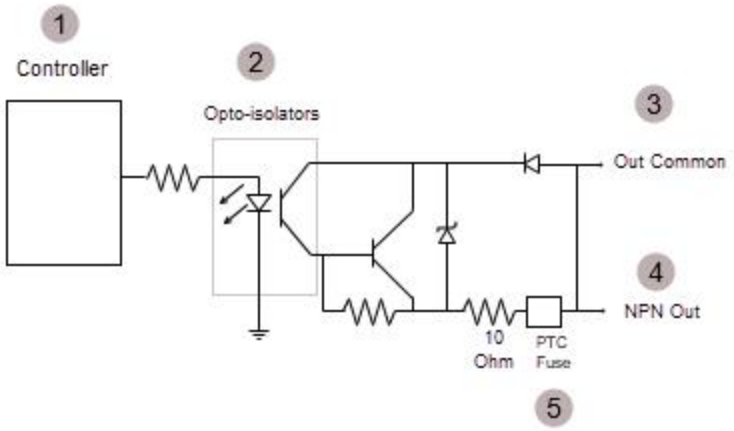


In case of PNP lines, the external load is connected between the output and the negative supply voltage (0 V). When connected to a 24 VDC power supply, the outputs pull up greater than 21 V when ON, and current flows through the load. When the outputs are OFF, no current flows through the load.

The image below shows the process diagram: the opto-isolator (2) transfers electrical signals between the controller (1) and the outputs (PNP In - 4, Out Common - 5). The PNP In (4) is protected by a PTC fuse (3) against overflowing current.

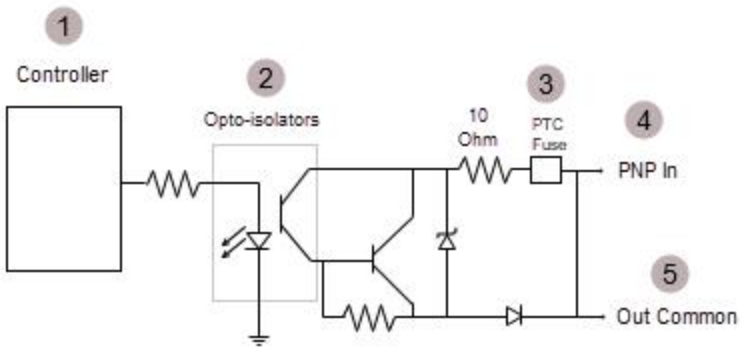


| Specification | Description |
|---|---|
| Voltage | 24 V maximum through external load |
| Current | 50 mA maximum sink current<br>OFF state leakage current 100 µA<br>External load resistance 240 Ohms to 10K Ohms<br>Each line is rated a maximum 50 mA, protected against over-current, short circuits and transients from switching inductive loads. High current inductive loads require external protection diode. |

# Output Wiring

The following table presents the wiring schematic of the Output 0 and Output 1 in NPN configuration:

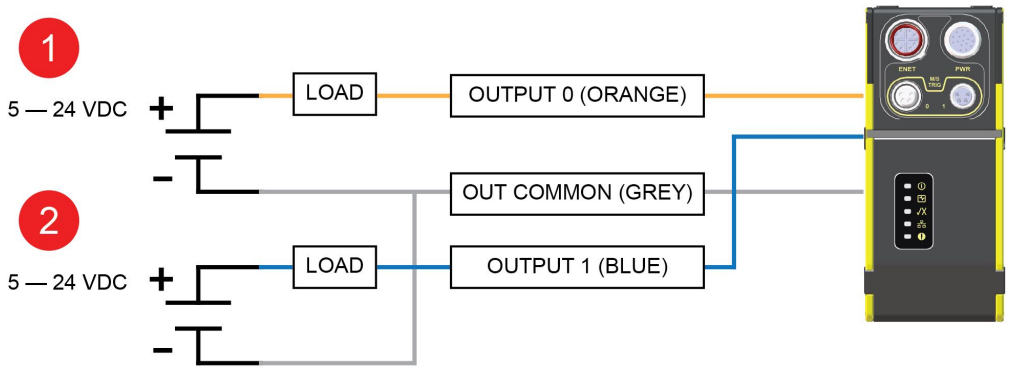


| Number | Component |
|---|---|
| 1 | OUTPUT 0 (Sensor Sinks Current - NPN) |
| 2 | OUTPUT 1 (Sensor Sinks Current - NPN) |

The following table presents the wiring schematic of the Output 0 and Output 1 in PNP configuration:

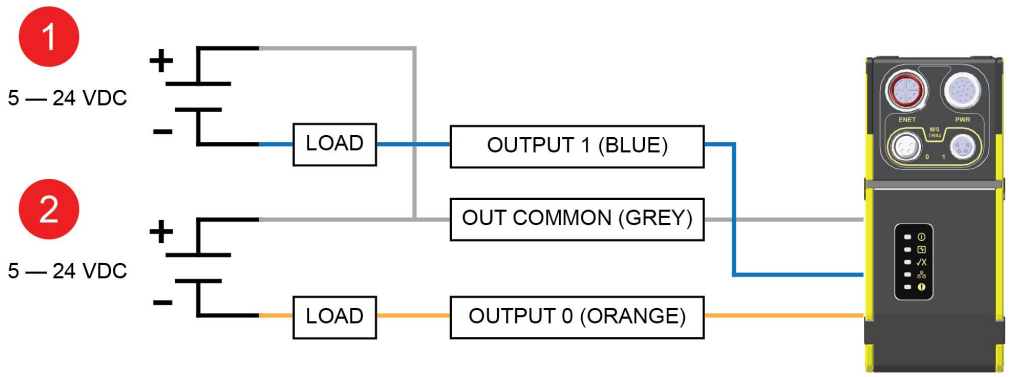


| Number | Component |
|---|---|
| 1 | OUTPUT 1 (Sensor Sources Current - PNP) |
| 2 | OUTPUT 0 (Sensor Sources Current - PNP) |

# Regulations and Conformity

**Note**: For the most current CE and UKCA declaration and regulatory conformity information, see the Cognex support site: cognex.com/support.

| | |
|---|---|
| Manufacturer | Cognex Corporation<br>One Vision Drive<br>Natick, MA 01760 USA |
| CE | L38-33: Regulatory Model 50203<br>L38-50: Regulatory Model 50203<br>L38-100: Regulatory Model 50203<br>L38-300: Regulatory Model 50203<br>L38-500: Regulatory Model 50201<br>This is a class A product. In a domestic environment this product may cause radio interference in which case the user may be required to take immediate measures. This equipment complies with the essential requirements of the EU Directive 2014/30/EU. Declarations are available from your local representative. |
| EU RoHS | Compliant to the most recent applicable directive. |
| FCC | FCC Part 15, Class A<br>This equipment has been tested and found to comply with the limits for a Class A digital device, pursuant to part 15 of the FCC Rules. These limits are designed to provide reasonable protection against harmful interference when the equipment is operated in a commercial environment. This equipment generates, uses, and can radiate radio frequency energy and, if not installed and used in accordance with the instruction manual, may cause harmful interference to radio communications. Operation of this equipment in a residential area is likely to cause harmful interference in which case the user will be required to correct the interference at his own expense. |
| Laser Safety Certification | IEC 60825-1 US FDA CDRH Filing |
| Korea | L38-33: Regulatory Model 50201: R-R-CGX-50203<br>L38-50: Regulatory Model 50201: R-R-CGX-50203<br>L38-100: Regulatory Model 50201: R-R-CGX-50203<br>L38-300: Regulatory Model 50201: R-R-CGX-50203<br>L38-500: Regulatory Model 50201: R-R-CGX-50201<br>This device is certified for office use only and if used at home, there can be frequency interference problems. |
| TÜV | L38-33: Regulatory Model 50203<br>L38-50: Regulatory Model 50203<br>L38-100: Regulatory Model 50203<br>L38-300: Regulatory Model 50203<br>L38-500: Regulatory Model 50201 |
| | NRTL: TÜV SÜD SCC/NRTL OSHA Scheme for UL/CAN 61010-1. |
| | CB report available upon request. TÜV SÜD, IEC/EN 61010-1. |

| | |
|---|---|
| UK CA | L38-33: Regulatory Model 50203<br>L38-50: Regulatory Model 50203<br>L38-100: Regulatory Model 50203<br>L38-300: Regulatory Model 50203<br>L38-500: Regulatory Model 50201<br>This is a class A product. In a domestic environment this product may cause radio interference in which case the user may be required to take immediate measures. This equipment complies with the essential requirements of the Electromagnetic Compatibility Regulations 2016. Declarations are available from your local representative. |

# China RoHS



| | Hazardous Substances 有害物质 | | | | | |
|---|---|---|---|---|---|---|
| Part Name<br>部件名称 | Lead (Pb)<br>铅 | Mercury (Hg)<br>汞 | Cadmium (Cd)<br>镉 | Hexavalent Chromium (Cr (VI))<br>六价铬 | Polybrominated biphenyls (PBB)<br>多溴联苯 | Polybrominated diphenyl ethers (PBDE)<br>多溴二苯醚 |
| Regulatory Model 50201 | X | O | O | O | O | O |
| Regulatory Model 50203 | X | O | O | O | O | O |

This table is prepared in accordance with the provisions of SJ/T 11364.
这个标签是根据SJ / T 11364 的规定准备的。

O: Indicates that said hazardous substance contained in all of the homogeneous materials for this part is below the limit requirement of GB / T26572 - 2011.
表示本部件所有均质材料中含有的有害物质低于GB / T26572 - 2011 的限量要求。

X: Indicates that said hazardous substance contained in at least one of the homogeneous materials used for this part is above the limit requirement of GB / T26572 - 2011.
表示用于本部件的至少一种均质材料中所含的危害物质超过GB / T26572 - 2011 的限制要求。

# For European Community Users

Cognex complies with Directive 2012/19/EU OF THE EUROPEAN PARLIAMENT AND OF THE COUNCIL of 4 July 2012 on waste electrical and electronic equipment (WEEE).

This product has required the extraction and use of natural resources for its production. It may contain hazardous substances that could impact health and the environment, if not properly disposed.

In order to avoid the dissemination of those substances in our environment and to diminish the pressure on the natural resources, we encourage you to use the appropriate take-back systems for product disposal. Those systems will reuse or recycle most of the materials of the product you are disposing in a sound way.


The crossed out wheeled bin symbol informs you that the product should not be disposed of along with municipal waste and invites you to use the appropriate separate take-back systems for product disposal.

If you need more information on the collection, reuse, and recycling systems, please contact your local or regional waste administration.

You may also contact your supplier for more information on the environmental performance of this product.

# Product Service

- Bring any performance issues to the attention of your Cognex sales representative.
- The sensor can only be serviced by a trained Cognex representative. Return the unit to Cognex for any service or repairs.
- Do not operate the sensor if the enclosure appears damaged.