COGNEX

Advanced machine vision made easy

In-Sight® 6900 Series

Reference Manual



2026 September 28

Legal Notices

The software described in this documentation is provided "as is" and "as available," without warranty of any kind, express or implied, including but not limited to the warranties of merchantability, fitness for a particular purpose, and non-infringement. In no event shall Cognex Corporation and its global affiliates (collectively, “Cognex”) be liable for any claims, damages, or other liability arising from, out of, or in connection with the software or your use of the software.

Your use of this software is governed by the full terms and conditions of the Cognex Software License Agreement. For complete licensing details and legal terms, please visit https://www.cognex.com/terms-and-conditions.

The information in this document is subject to change without notice and should not be construed as a commitment by Cognex. Cognex is not responsible for any errors that may be present in either this document or the associated software.

Companies, names, and data used in examples herein are fictitious unless otherwise noted. No part of this document may be reproduced or transmitted in any form or by any means, electronic or mechanical, for any purpose, nor transferred to any other media or language without the written permission of Cognex Corporation.

Portions of the hardware and software provided by Cognex may be covered by one or more U.S. and foreign patents, as well as pending U.S. and foreign patents listed on the Cognex web site at: cognex.com/patents.

In the event of any inconsistency between the English language version of this documentation and any other language version, the English language version shall take precedence.

Copyright © 2026. Cognex Corporation. All Rights Reserved.

The following are registered U.S. trademarks of Cognex Corporation:

2DMAX, 3D LIGHTBURST TECHNOLOGY, ADVANTAGE, ALIGNPLUS, ASSEMBLYPLUS, COGNEX, COGNEX VISION FOR INDUSTRY, CVL, DATAMAN, DVT, EASYBUILDER, EDGE INTELLIGENCE, HOTBARS, IDMAX, IN-SIGHT, LIGHTBURST, MX, OMNIVIEW, PATFIND, PATFLEX, PATINSPECT, PATMAX, PATMAX REDLINE, PATQUICK, POWERGRID, QUICKSORT, ULTRALIGHT, VISION SOLUTIONS, VISIONPRO, VISIONVIEW

The following are trademarks of the Cognex Corporation:

1DMAX, 3D SYMBOLIC LIGHT, 3D-LOCATE, 3DMAX, ONEVISION, PINPOINT, RANGEMAX, SLX, VIDI, OCRMAX, INSPECTEDGE, VISION SOLUTIONS

Portions copyright © Microsoft Corporation. All rights reserved.

Portions copyright © MadCap Software, Inc. All rights reserved.

Other product and company trademarks identified herein are the trademarks of their respective owners.

Precautions

To reduce the risk of injury or equipment damage, observe the following precautions when you install the Cognex product:

- The vision controller requires a UL or NTRL listed power supply with a 24 VDC output that meets the following rating requirements:
    - 24 V DC -15% – +20% output connection using a Protective Extra-Low Voltage (PELV) power supply, in accordance with EN 61010-1, EN 62368-1, and IEC 61131-2.

  Any other voltage creates a risk of fire or shock and can damage the components. Applicable national and local wiring standards and rules must be followed.
- This product is intended for industrial use in automated manufacturing or similar applications.
- The safety of any system incorporating this product is the responsibility of the assembler of the system.
- Do not install Cognex products where they are exposed to environmental hazards such as excessive heat, dust, moisture, humidity, impact, vibration, corrosive substances, flammable substances, or static electricity.
- Route cables and wires away from high-current wiring or high-voltage power sources to reduce the risk of damage or malfunction from the following causes: over-voltage, line noise, electrostatic discharge (ESD), power surges, or other irregularities in the power supply.
- Do not expose the image sensor to laser light. Image sensors can be damaged by direct, or reflected, laser light. If your application requires laser light that might strike the image sensor, use a lens filter at the corresponding laser wavelength. For suggestions, contact your local integrator or application engineer.
- This product does not contain user-serviceable parts. Do not make electrical or mechanical modifications to product components. Unauthorized modifications can void your warranty.
- Changes or modifications not expressly approved by the party responsible for regulatory compliance could void the user's authority to operate the equipment.
- Include service loops with cable connections.
- Ensure that the cable bend radius begins at least six inches from the connector. Cable shielding can be degraded or cables can be damaged or wear out faster if a service loop or bend radius is tighter than 10X the cable diameter.
- This device should be used in accordance with the instructions in this manual.
- All specifications are for reference purposes only and can change without notice.

Symbols

The following symbols indicate safety precautions and supplemental information:

WARNING: This symbol indicates a hazard that could cause death, serious personal injury or electrical shock.

CAUTION: This symbol indicates a hazard that could result in property damage.

Note: This symbol indicates additional information about a subject.

Tip: This symbol indicates suggestions and shortcuts that might not otherwise be apparent.

Table of Contents

Legal Notices 2
Precautions 3
Symbols 4
Table of Contents 5
Getting Started 7
About the In-Sight 6900 Series 7
Supporting Documentation 8
Software Documentation 8
Device and Software Compatibility 8
Supported Cameras 9
Area Scan Cameras 9
Line Scan Cameras 11
Accessories 12
Supported Lights 12
Cables and Adapters 13
Power Supply 15
Light Controller 15
Setting Up Your In-Sight Vision Controller 16
In-Sight 6900 Layout 16
Dimensions 17
In-Sight 6900 17
Connecting the In-Sight 6900 18
Connecting the Ethernet Cables 18
Connecting the EtherCAT Cable 19
Connecting the Power and I/O Terminal Blocks 21
Connecting Power and I/O for Cameras 30
Mounting the In-Sight 6900 35
Mounting the In-Sight 6900 on a DIN Rail 35
Using Your In-Sight Vision Controller 37
Using In-Sight 6900 with In-Sight Vision Suite 37
Industrial Protocols 37
Specifications 38
In-Sight 6900 Series Vision Controller 38
3-Pin Power Connector 40
USB Connectors 41
Isolated High-Speed Outputs 42
High Speed Output Wiring 44
Non-Isolated Low-Speed Outputs 45
High-Speed Inputs 46
Cable Specifications 47
CAM IO Area Scan Cable 47
CAM IO Line Scan Cable 48
Area Scan Y-Cable, Standard Resolution 49

Area Scan Y-Cable, High Resolution 50
Line Scan Y-Cable, Standard Resolution 51
Line Scan Y-Cable, High Resolution 52
Light Extension Cable 53
Cleaning and Maintenance 54
Clean the Housing 54
Regulations and Conformity 55
For European Community Users 56
中国 RoHS 合规声明 / China RoHS Compliance Declaration 56

Getting Started

This section provides general information about the In-Sight 6900 series vision controller and the accessories and systems.

About the In-Sight 6900 Series

The In-Sight 6900 series vision controller is a platform that enables high-resolution industrial acquisition devices to use the latest Cognex vision technology of the In-Sight Vision Suite by performing vision jobs on the In-Sight vision controller.



Supporting Documentation

This document provides basic information about the In-Sight 6900 vision controllers. Additional documentation is available on the support site, or through the Windows **Start** menu or the In-Sight Vision Suite **Help** menu after you install the In-Sight software on your PC.

Software Documentation

For In-Sight software documentation, visit: https://support.cognex.com/en/products/in-sight-vision-suite

- The ***In-Sight Vision Suite Help*** document provides information for using the main In-Sight Vision Suite device management interface.
- The ***In-Sight EasyBuilder Help*** document provides information for using the simplified EasyBuilder job configuration environment. This document only supports 2D applications.
- The ***In-Sight Spreadsheet Help*** document provides information for using the flexible Spreadsheet job confuration environment. This document only supports 2D applications.
- The ***In-Sight 3D EasyBuilder Help*** document provides information for using the simplified 3D EasyBuilder job configuration environment. This document supports 3D applications.
- The ***In-Sight 3D Spreadsheet Help*** document provides information for using the flexible 3D Spreadsheet job configuration environment. This document supports 3D applications.

Device and Software Compatibility

The In-Sight 6900 series vision controllers support the following devices:

- Area scan cameras, 2.3 – 65 MP
- Line scan cameras, 4K – 8K
- Multi-Light Hub light controller

The In-Sight 6900 series vision controllers support the following software:

- In-Sight EasyBuilder
- In-Sight Spreadsheet

Supported Cameras

Area Scan Cameras

The In-Sight 6900 series vision controllers support standard resolution and high resolution area scan cameras.

Standard Resolution Area Scan Cameras

The In-Sight 6900 series vision controllers support the following standard resolution area scan cameras:

Product Number	Resolution	Mono/Color	Shutter Mode	Exposure Time	Lens Mount
CIC-A023-MG-168-5G	2.3 MP	Mono	Global	21-10000000 µs	C-mount
CIC-A023-CG-168-5G		Color			
CIC-A05-MG-105-5G	5 MP	Mono		10-10000000 µs	
CIC-A05-CG-105-5G		Color			
CIC-A12-MG-44-5G	12.3 MP	Mono		13-10000000 µs	
CIC-A12-CG-44-5G		Color			
CIC-A20-MG-27-5G	20.2 MP	Mono		16-10000000 µs	
CIC-A20-CG-27-5G		Color			
CIC-A25-MG-22-5G	24.4 MP	Mono			
CIC-A25-CG-22-5G		Color			

Product Number	Lens Compatibility	Sensor Size	Pixel Size	Sensor Diagonal	Pixel Bit Depth	Power Requirements	Y-Cable Compatibility
CIC-A023-MG-168-5G	HR series	1/2.3″	3.45 × 3.45 µm	7.9 mm	8 bits mono	24 VD C	CCB-Y-AS-1
CIC-A023-CG-168-5G					24 bits color		
CIC-A05-MG-105-5G	UR series	1/1.8"	2.74 × 2.74 µm	8.8 mm	8 bits mono		
CIC-A05-CG-105-5G					24 bits color		
CIC-A12-MG-44-5G	SR series	1/1.1"		14 mm	8 bits mono		
CIC-A12-CG-44-5G					24 bits color		
CIC-A20-MG-27-5G	ZR series	1.1"		17.5 mm	8 bits mono		
CIC-A20-CG-27-5G					24 bits color		
CIC-A25-MG-22-5G		1.2"		19.3 mm	8 bits mono		
CIC-A25-CG-22-5G					24 bits color		

High Resolution Area Scan Cameras

The In-Sight 6900 series vision controllers support the following high resolution area scan cameras:

Product Number	Resolution	Mono/Color	Shutter Mode	Exposure Time	Lens Mount
CIC-A65-MG-17-T	65 MP (9344 × 7000)	Mono	Global	16-15000000 µs	M58 × 0.75
CIC-A65-CG-17-T		Color			

Product Number	Lens Compatibility	Sensor Size	Pixel Size	Sensor Diagonal	Pixel Bit Depth	Power Requirements	Y-Cable Compatibility
CIC-A65-MG-17-T	FF series with ML-TUBE-M58 or ML-EXR-M35M39 adapter	2.3"	3.2 × 3.2 µm	37.4 mm	8 bits	24 V DC	CCB-Y-AS-2
CIC-A65-CG-17-T							

Note: To install compatible lenses with the lens adapter, you might need spacers or extension rings to get the desired field of view and working distance.

Line Scan Cameras

The In-Sight 6900 series vision controllers support standard resolution and high resolution line scan cameras.

Standard Resolution Line Scan Cameras

The In-Sight 6900 series vision controllers support the following standard resolution line scan cameras:

Product Number	Resolution	Mono/Color	Shutter Mode	Exposure Time	Line Rate
CIC-L041-MG-84-5G	4096	Mono	Global	3.15-10,000,000 µs	83 kHz

Product Number	Lens Mount	Lens Compatibility	Pixel Size	Pixel Bit Depth	Power Requirements	Y-Cable Compatibility
CIC-L041-MG-84-5G	C	SR series	3.5 × 3.5 um	8 bits	24 V DC	CCB-Y-LS-1

High Resolution Line Scan Cameras

The In-Sight 6900 series vision controllers support the following high resolution line scan cameras:

Product Number	Resolution	Mono/Color	Shutter Mode	Exposure Time	Line Rate
CIC-L082-MG-148-T	8192	Mono	Global	4-100,000 µs	72 kHz

Product Number	Lens Mount	Lens Compatibility	Pixel Size	Pixel Bit Depth	Power Requirements	Y-Cable Compatibility
CIC-L082-MG-148-T	M72	FF series with ML-TUBE-M72 adapter	7 × 7 um	8 bits	24 V DC	CCB-Y-LS-2

Note: To install compatible lenses with the lens adapter, you might need spacers or extension rings to get the desired field of view and working distance.

Accessories

You can purchase the following components separately. For a list of options and accessories, contact your local Cognex sales representative.

Supported Lights

The In-Sight 6900 supports over 90 smart lights in a variety of sizes and forms, which are available separately. All lights are available in red, blue, or white colors.

Note:
This document only provides an overview of the types of smart lights that are available. For a detailed list of the supported lights in all available sizes, go to Machine Vision Lighting or contact Cognex support.

The following table provides information on the types of lights available:

Accessory	Product Number	Illustration
Bar Lights Available lengths: 41-242 mm	CEL-BA	
Combined Bar Lights Available lengths: 41-80 mm	CEL-BAQ	
Backlights Available lengths: 27-224 mm	CEL-BL	
Coaxial Lights Available lengths: 20-50 mm	CEL-CX	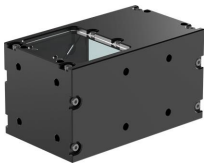
Dome Lights Available diameters: 80-285 mm	CEL-DM3	
Diffuse Square Lights Available lengths: 48-120 mm	CEL-DQH	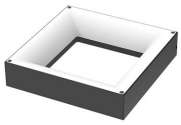
Diffuse Ring Lights Available diameter: 150 mm	CEL-DRW	

Accessory	Product Number	Illustration
Ring Lights Available diameters: 42-210 mm	CEL-RH	
Low-Angle Ring Lights Available lengths: 75-120 mm	CEL-RL	
Line scan lights Available lengths: 400-1,000 mm	CEL-HPLN	
Bar Light with Line Scan Attachment Available lengths: 200-300 mm	ICELB light and and ICELB-CL attachment	

Cables and Adapters

Note: Cables are sold separately.

Accessory	Product Number	Illustration
Ethernet Cable, RJ45 to RJ45	CGE-CBL-FLEX-H-xx (xx specifies length in meters: 5 m, 10 m, 20 m)	
EtherCAT Adapter	CCB-ECAT-T-DIN	

Cables for Area Scan Cameras

Accessory	Product Number	Illustration
CAM IO Area Scan Cable	CCB-M12-12P5P-xx (xx specifies length in meters: 5 m, 10 m, 20 m)	

Accessory	Product Number	Illustration
Area Scan Y-Cable, Standard Resolution (25 MP and below) For more information, see *Standard Resolution Area Scan Cameras* on page 9.	CCB-Y-AS-1	
Area Scan Y-Cable, High Resolution (65 MP) For more information, see *High Resolution Area Scan Cameras* on page 10.	CCB-Y-AS-2	

Note: When using Cognex Ecosystem Lights, the maximum IO cable length is 10 meters. If your deployment requires a 20-meter IO cable, the In-Sight 6900 vision controller cannot power the CEL smart lights, and you must provide external power or separate lighting.

Cables for Line Scan Cameras

Accessory	Product Number	Illustration
CAM IO Line Scan Cable, 5 m	CKR-200-CBL-EXT	
CAM IO Line Scan Cable	CCB-M12-12P-xx (xx specifies length in meters: 10 m, 20 m)	
Line Scan Y-Cable, Standard Resolution (4K) For more information, see *Standard Resolution Line Scan Cameras* on page 11.	CCB-Y-LS-1	
Line Scan Y-Cable, High Resolution (8K) For more information, see *High Resolution Line Scan Cameras* on page 11.	CCB-Y-LS-2	

Additional Cables for Lights

Accessory	Product Number	Illustration
Light Extension Cable	CCB-M12-5P-x (x specifies length in meters: 1m, 5 m)	 
Light Auxiliary Power Cable A-coded, for the Multi-Light Hub light controller	IVSL-5PM12-xx (x specifies length in meters: 5 m, 10 m, 15 m)	
Light Auxiliary Power Cable L-coded, for CEL-HPLN line scan lights	CCB-CIO-P4141-xxx (xxx specifies length in centimeters: 0.5 m, 1 m, 2 m, 3 m, 4 m, 5 m)	

Power Supply

Accessory	Product Number	Illustration
Power Supply, 100-240 V AC Input, 24 V DC / 5 A Output, DIN Rail Mountable	ACC-QUINT-PS	

Light Controller

The Cognex Multi-Light Hub is an external light controller that allows connecting up to four Cognex Ecosystem Lights. For more information, see *Connecting a Camera with Multiple Smart Lights* on page 33 and the *Multi-Light Hub Reference Manual* on the Cognex support site.

Accessory	Product Number	Illustration
Cognex Multi-Light Hub	CECT-MLH-100W-4	

Setting Up Your In-Sight Vision Controller

Read this section to learn how the vision controller connects to other components and accessories.

In-Sight 6900 Layout

The In-Sight 6900 provides the following hardware connections:

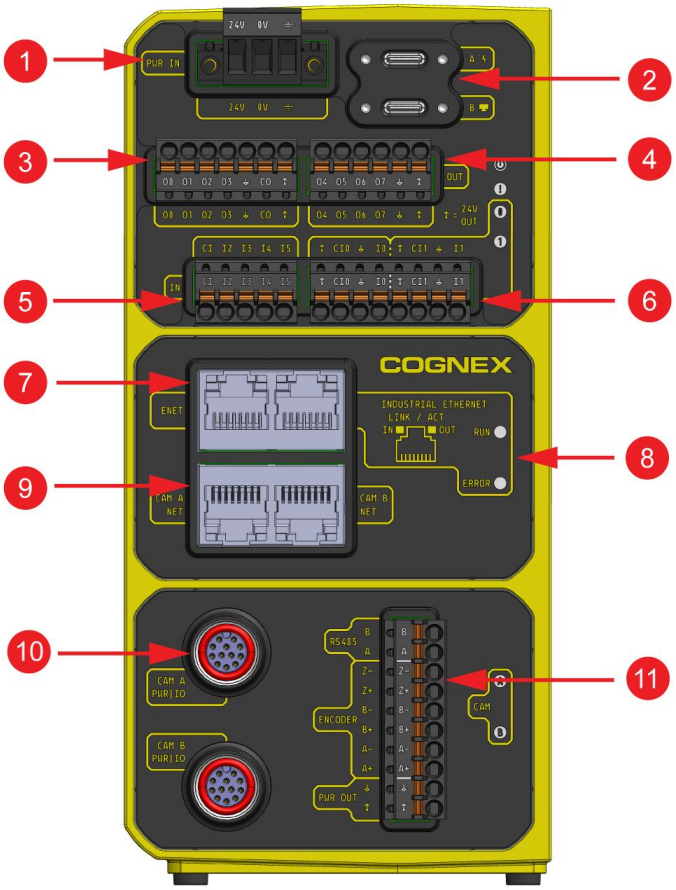

Number	Description
1	24 V DC power terminal
2	USB ports
3	Isolated outputs
4	Non-isolated outputs
5	Auxiliary inputs
6	Hardware trigger inputs
7	LAN RJ45 port (left) and Industrial Ethernet port (right)
8	**RUN** and **ERROR** LEDs for EtherCAT
9	RJ45 GigE Vision camera ports
10	Camera I/O ports
11	Encoder inputs

Dimensions

The following sections list the dimensions of the vision controller.

In-Sight 6900

Note:

- Dimensions are in millimeters [inches] and are for reference purposes only.
- All specifications are for reference purposes only and can change without notice.

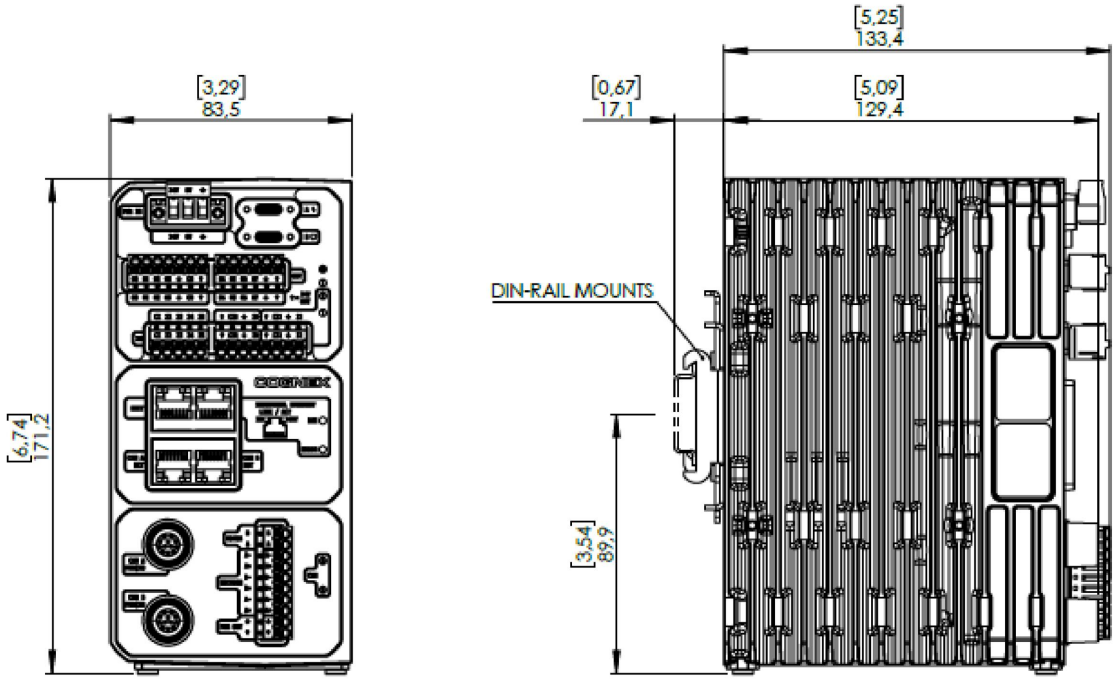

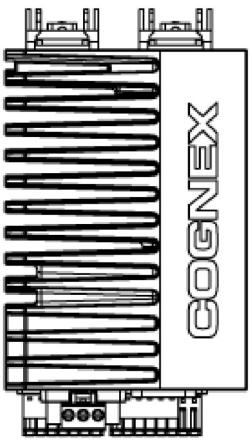

Connecting the In-Sight 6900

The following sections describe the connection options for the In-Sight 6900.

Connecting the Ethernet Cables

CAUTION: The Ethernet cable shield must be grounded at the far end. Whatever this cable is plugged into (typically a switch or router) should have a grounded Ethernet connector. A digital voltmeter should be used to validate the grounding. If the far end device is not grounded, a ground wire should be added in compliance with local electrical codes.

Note: The In-Sight 6900 has separate Ethernet ports for cameras, network connection, and Programmable Logic Controllers (PLCs). For more information about Ethernet port assignments on the In-Sight 6900, see *In-Sight 6900 Layout* on page 16.

Connect the camera to the vision controller:

1. Connect one end of an RJ-45-to-RJ-45 Ethernet cable to the Ethernet port labeled CAM A NET on the In-Sight 6900.
2. Connect the other end of the Ethernet cable to the RJ-45 connector on the camera.

Connect the vision controller to the network:

1. Connect one end of an RJ-45-to-RJ-45 Ethernet cable to the Ethernet port on the In-Sight 6900 that is labeled ENET, which is reserved for network connection.
2. Connect the other end of the Ethernet cable to a switch, router, or PC.

Connect the vision controller to a Programmable Logic Controller (PLC):

1. Connect one end of an RJ-45-to-RJ-45 Ethernet cable to the Ethernet port on the In-Sight 6900 that is labeled INDUSTRIAL ETHERNET, which is reserved for industrial protocols.
2. Connect the other end of the Ethernet cable to a PLC.

Connecting the EtherCAT Cable

Connect the EtherCAT adapter to the INDUSTRIAL ETHERNET connector of the vision controller.

Note: Do not plug the EtherCAT adapter into an Ethernet network. You could damage your Ethernet network and disable your EtherCAT set.

The EtherCAT adapter provides two 100 MBit EtherCAT ports. One of the ports acts as input, and the other one as output.

- If you connect an RJ-45 Ethernet cable to the EtherCAT connector, you connect to the IN port.
- If you connect with the EtherCAT adapter, both the IN and OUT ports are available.

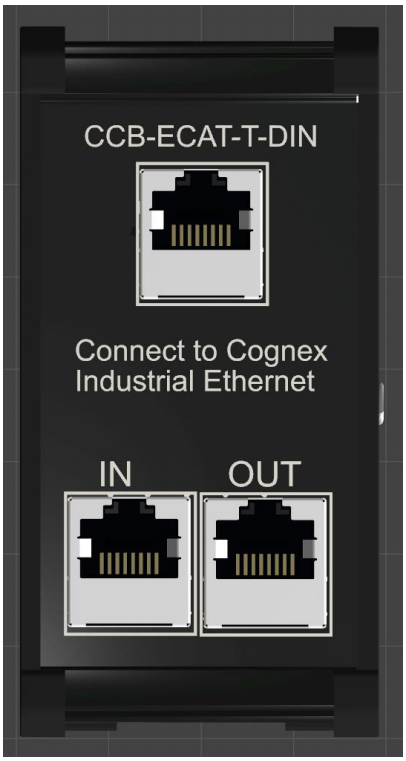

EtherCAT Physical Topologies

The vision controller supports the following physical topologies:

- Star
- Line
- Ring

Star EtherCAT Topology

The star topology connects each vision controller to the PLC individually. This topology offers increased availability, as each vision controller can be reached individually.

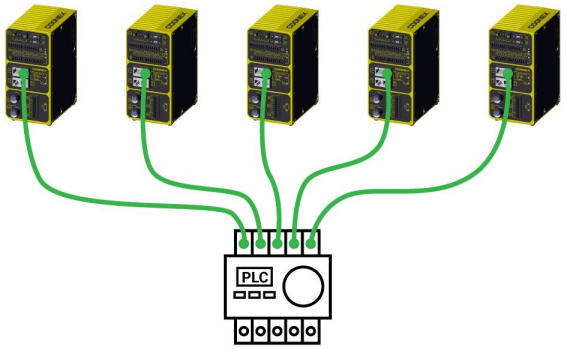

Line EtherCAT Topology

The line topology connects the vision controllers in a daisy chain. The output of one adapter cable is plugged into the input of the next one. The line starts at the output from the PLC, and ends at the input connector of the last vision controller. This topology reduces the cabling needed to connect all vision controllers.

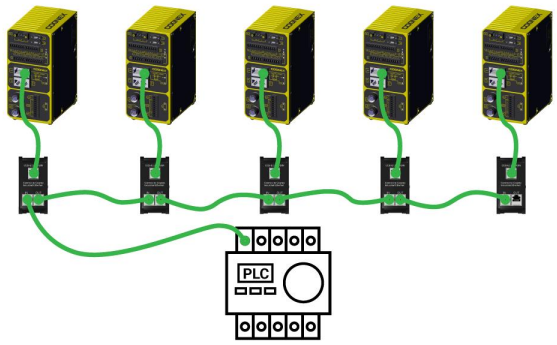

Ring EtherCAT Topology

The ring topology connects the vision controllers in a daisy chain. The output of one adapter cable is plugged into the input of the next one. The ring starts at the output from the PLC, and ends at the output of the last vision controller connected back to the PLC. This topology offers redundancy, since a vision controller can be reached from either direction.

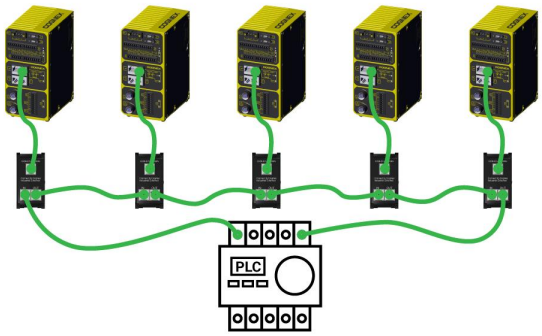

Connecting the Power and I/O Terminal Blocks

⚠ **CAUTION**: To reduce emissions, connect the far end of the power cable shield to frame ground.

Note:

- Perform wiring or adjustments to I/O devices when the vision controller is not receiving power.
- You can clip unused wires short or use a tie made of non-conductive material to tie them back. Keep bare wires separated from the +24 V DC wire and other unconnected cables or ground.

The In-Sight 6900 vision controller receives power and exchanges I/O signals through dedicated terminal blocks that allow you to wire your power supply and I/O devices directly to the vision controller without the need for specialized breakout cables.

The terminal blocks for the In-Sight 6900 are removable for easier wiring.

Connect the In-Sight 6900 to the power supply:

For more information on the power connector, see *3-Pin Power Connector* on page 40.

1. Verify that the 24 V DC power supply is unplugged and not receiving power.
2. Remove the terminal block labeled PWR from the In-Sight 6900.



3. Thread the wires of the cable into the slots of the terminal block, observing the polarity and grounding as labeled on the backplate of the In-Sight 6900.

4. Connect the other end of the cable to the power supply.
5. Restore power to the 24 V DC power supply and turn it on if necessary.

Connect I/O devices to the In-Sight 6900:

1. Depending on the I/O device you want to connect, remove the terminal blocks labeled OUT, IN, or ENCODER.

   Note: The initial release of the In-Sight vision controller does not support connected encoders.



2. Thread the wires of the cable into the slots of the terminal block, observing the labels on the backplate of the In-Sight 6900.
3. Connect the other end of the cable into the I/O device you want to connect.

For device-specific instructions, see the following subsections.

Connecting a Signal Lamp

You can connect a signal lamp to the non-isolated outputs terminal block of your In-Sight 6900 vision controller.

The following wiring example shows one possible way to connect a signal lamp with red, yellow, and green lights:

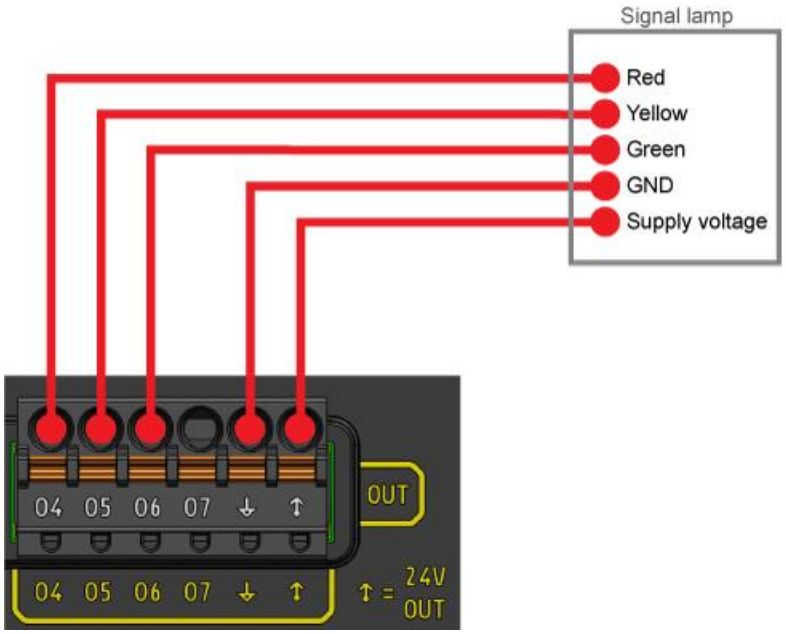

Note: It is not necessary to use the same output wire ports for red, yellow, and green lights as in this example. You can configure the output signals in In-Sight Vision Suite.

1. Make sure that your vision controller is powered down before changing any connections.
2. Remove the non-isolated outputs terminal block from the vision controller for wiring.
3. Thread the wire for the Red signal on the signal lamp into the wire port labeled **O4** on the terminal block.
4. Thread the wire for the Yellow signal into the wire port labeled **O5**.
5. Thread the wire for the Green signal into the wire port labeled **O6**.
6. Thread the wire for Ground into the ground wire port labeled with the symbol.
7. Thread the wire for power into the supply voltage wire port labeled with the symbol.
8. Power on your vision controller, and configure the output signals for the connected lines in In-Sight Vision Suite.

Connecting a Photo Eye

To connect a photo eye sensor to your In-Sight 6900 vision controller, connect the wires according to the following instructions depending on the type of sensor you are connecting:

NPN

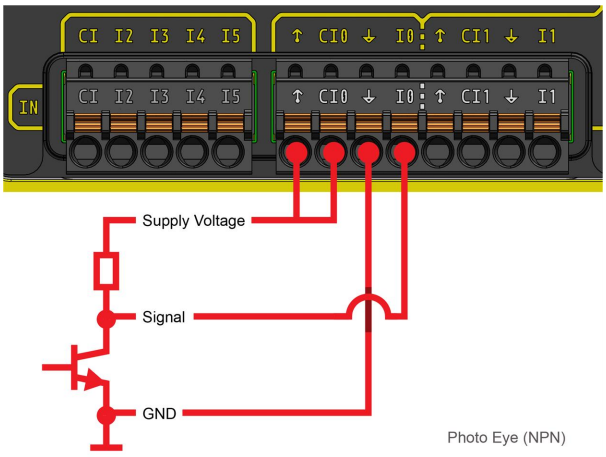

Photo Eye (NPN)

PNP

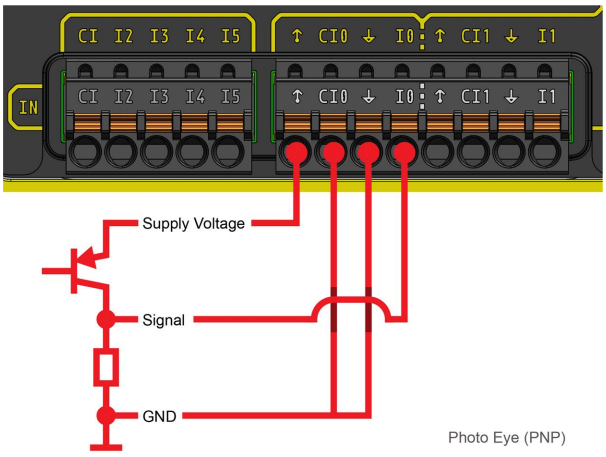

Photo Eye (PNP)

1. Make sure that your vision controller is powered down before changing any connections.
2. Remove the inputs terminal block from the vision controller for wiring.
3. Thread the wire for the Signal from the photo eye sensor into the wire port labeled **I0** on the terminal block.
4. Thread the wire for Ground into the ground wire port labeled with the  symbol.

   If you are connecting a PNP photo eye sensor, split the Ground wire and connect it to the wire port labeled **CI0** on the terminal block as well.
5. Thread the wire for power into the supply voltage wire port labeled with the  symbol.

   If you are connecting an NPN photo eye sensor, split the power wire and connect it to the wire port labeled **CI0** on the terminal block as well.

Connecting a Potential-Free Contact

To connect a potential-free contact to your In-Sight 6900 vision controller, connect the wires according to the following example:

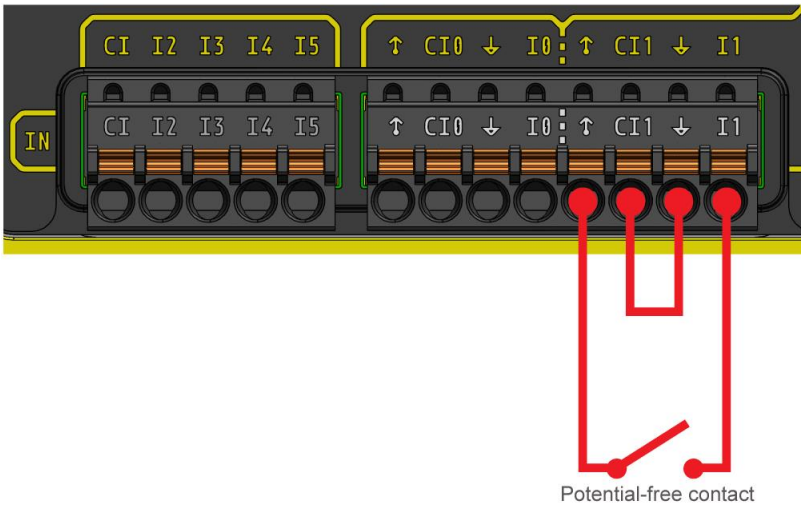

1. Make sure that your vision controller is powered down before changing any connections.
2. Remove the inputs terminal block from the vision controller for wiring.
3. Thread one wire into the supply voltage wire port labeled with the ↑ symbol.
4. Thread another wire into the wire port labeled **I1**.
5. Connect the wires with a relay or switch.

Connecting an Encoder

You can connect an encoder to your In-Sight 6900 vision controller on the encoder terminal block. Depending on the type of your encoder, you have to use different wire ports on the terminal block:

- For single-channel encoders, connect the appropriate output wires to the **A+** and **A-** wire ports.
- For quadrature encoders:
    - connect the appropriate wires for channel A to the **A+** and **A-** wire ports, and
    - connect the wires for channel B to the **B+** and **B-** wire ports.

The following table summarizes the supported configurations for each encoder type:

Encoder Type	Supported Camera
Single-channel encoder with single-ended wiring	Standard resolution (4K) and high resolution (8K) line scan cameras
Quadrature encoder with single-ended wiring	High resolution (8K) line scan cameras
Quadrature encoder with differential wiring	High resolution (8K) line scan cameras

Connecting a Single-Channel Encoder with Single-Ended Wiring

This section instructs you to connect a single-channel encoder with single-ended wiring to the encoder terminal block of your In-Sight 6900 vision controller.

Supported camera types: Standard resolution and high resolution line scan cameras.

When to Use This Configuration

Use this configuration when the encoder provides one channel A signal referenced to Ground/Common. A single-channel encoder supplies count information but does not provide a channel B signal for determining direction from the encoder signals alone.

Prerequisites

Ensure that the following prerequisites are met before applying power:

- Verify each signal against the wiring diagram of the encoder manufacturer.
- Verify the encoder supply voltage requirements.

Procedure

To connect a single-channel encoder with single-ended wiring:

1. Make sure that your vision controller is powered down before changing any connections.
2. Remove the encoder terminal block from the vision controller for wiring.
3. Thread the wire for channel A on the encoder into the wire port labeled **A+** on the terminal block.
4. Thread the wire for Ground/Common into the ground wire port labeled with the  symbol.
5. Leave the **A-**, **B+**, **B-**, **Z+**, and **Z-** terminals unused.
6. If the encoder is powered by the vision controller, thread the wire for power into the supply voltage wire port labeled with the  symbol.
7. Reinstall the encoder terminal block.

After connecting the encoder, power on your vision controller and configure the encoder in In-Sight Vision Suite. For more information, see *In-Sight Vision Suite Help*.

Connecting a Quadrature Encoder with Single-Ended Wiring

This section instructs you to connect a quadrature encoder with single-ended wiring to the encoder terminal block of your In-Sight 6900 vision controller.

Supported camera types: High resolution line scan cameras.

When to Use This Configuration

Use this configuration when the encoder provides separate channel A and channel B signals referenced to Ground/Common. The A and B channels provide quadrature information that can be used to determine direction.

Prerequisites

Ensure that the following prerequisites are met before applying power:

- Verify each signal against the wiring diagram of the encoder manufacturer.
- Verify the encoder supply voltage requirements.

Procedure

To connect a single-channel encoder with single-ended wiring:

1. Make sure that your vision controller is powered down before changing any connections.
2. Remove the encoder terminal block from the vision controller for wiring.
3. Thread the wire for channel A on the encoder into the wire port labeled **A+** on the terminal block.
4. Thread the wire for channel B on the encoder into the wire port labeled **B+** on the terminal block.
5. Thread the wire for Ground/Common into the ground wire port labeled with the  symbol.
6. Leave the **A-**, **B-**, **Z+**, and **Z-** terminals unused.
7. If the encoder is powered by the vision controller, thread the wire for power into the supply voltage wire port labeled with the  symbol.
8. Reinstall the encoder terminal block.

After connecting the encoder, power on your vision controller and configure the encoder in In-Sight Vision Suite. For more information, see *In-Sight Vision Suite Help*.

Connecting a Quadrature Encoder with Differential Wiring

This section instructs you to connect a quadrature encoder with differential wiring to the encoder terminal block of your In-Sight 6900 vision controller.

Supported camera types: High resolution line scan cameras.

When to Use This Configuration

Use this configuration when the encoder provides separate channel A and channel B signals referenced to Ground/Common. The A and B channels provide quadrature information that can be used to determine direction.

Prerequisites

Ensure that the following prerequisites are met before applying power:

- Verify each signal against the wiring diagram of the encoder manufacturer.
- Verify the encoder supply voltage requirements.

Procedure

To connect a single-channel encoder with single-ended wiring:

1. Make sure that your vision controller is powered down before changing any connections.
2. Remove the encoder terminal block from the vision controller for wiring.
3. Thread the wire for channel A+ on the encoder into the wire port labeled **A+** on the terminal block.
4. Thread the wire for channel A- on the encoder into the wire port labeled **A-** on the terminal block.
5. Thread the wire for channel B+ on the encoder into the wire port labeled **B+** on the terminal block.
6. Thread the wire for channel B- on the encoder into the wire port labeled **B-** on the terminal block.
7. Thread the wire for Ground/Common into the ground wire port labeled with the  symbol.
8. Leave the **Z+** and **Z-** terminals unused.
9. If the encoder is powered by the vision controller, thread the wire for power into the supply voltage wire port labeled with the  symbol.
10. Reinstall the encoder terminal block.

After connecting the encoder, power on your vision controller and configure the encoder in In-Sight Vision Suite. For more information, see *In-Sight Vision Suite Help*.

Connecting Power and I/O for Cameras

The camera and the vision controller together form the In-Sight 6900 vision system. The camera requires power from the vision controller to function as a vision system. To connect the camera to the vision controller, do the following:

1. Connect one end of an M12-to-M12 cable to one of the M12 ports on the vision controller that is labeled CAM PWR/IO.
2. Connect the other end of the M12-to-M12 cable to the singular end of the appropriate Y-cable for your camera.
3. Connect the M8 or Hirose HR10A connector of the Y-cable to the appropriate port on your camera.
4. Connect the remaining M12 connector of the Y-cable to your light.

For more detailed instructions about specific use cases, see the following subsections.

Connecting a Camera with a Single Smart Light

To connect a camera with a single Cognex Ecosystem Light to your In-Sight 6900 vision controller, connect the cables according to the following instructions:

Note: This section only provides instructions for connecting your camera to the CAM IO port of the In-Sight 6900. Make sure that you have also established an Ethernet connection as described in *Connecting the Ethernet Cables* on page 18.

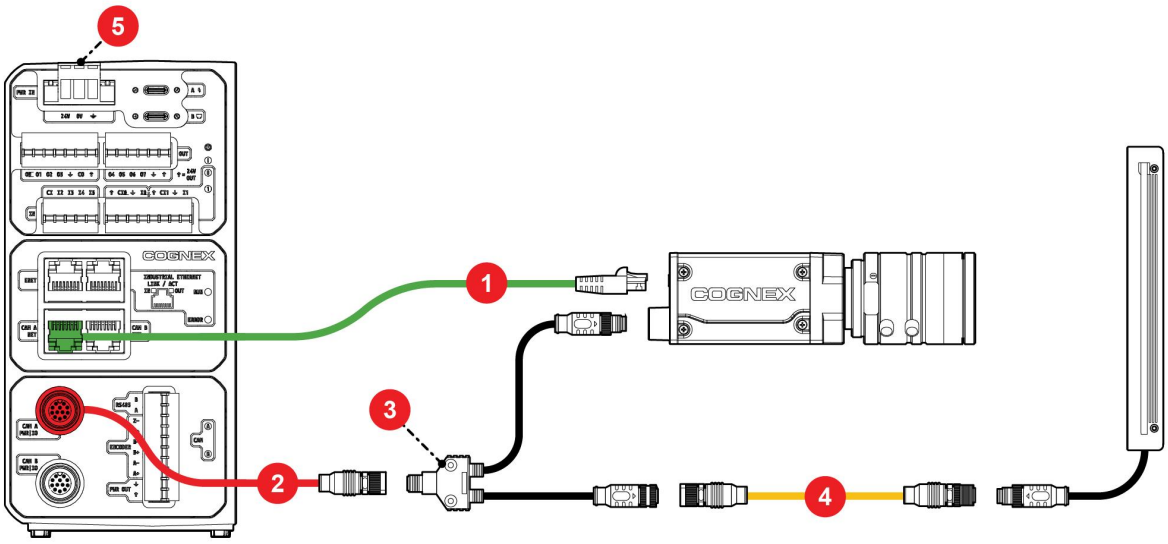

Element	Description
1	Ethernet cable (already connected)
2	CAM IO cable
3	Y-cable
4	Light extension cable
5	Power

Note: When using Cognex Ecosystem Lights, the maximum IO cable length is 10 meters. If your deployment requires a 20-meter IO cable, the In-Sight 6900 vision controller cannot power the Cognex Ecosystem Lights, and you must provide external power or separate lighting. For more information on the available cables, see *Cables and Adapters* on page 13.

1. Make sure that your vision controller is powered down before changing any connections, as the In-Sight 6900 does not support hot swapping at this time.
2. Connect the CAM IO cable to one of the CAM PWR/IO ports on your vision controller.
3. Connect the other end of the CAM IO cable to the M12 connector on the singular end of the appropriate Y-cable for the camera you want to connect.
4. Connect the M8 or Hirose HR10A connector of the Y-cable to the camera.
5. Connect the remaining M12 connector to the Cognex Ecosystem Light using a light extension cable as necessary.

Once connected, the camera can send STROBE signals directly to the Cognex Ecosystem Light through the Y-cable connection. The vision controller provides power to both the camera and the Cognex Ecosystem Light, and also can send

trigger signals to the camera through the CAM IO cable. The vision controller automatically detects the Cognex Ecosystem Light, and can control light parameters such as intensity.

Note: The Cognex Ecosystem Light must be plugged in before powering up the system, otherwise the In-Sight 6900 does not detect the light.

Connecting a Camera with Multiple Smart Lights

To connect a camera with multiple Cognex Ecosystem Lights to your In-Sight 6900 vision controller, connect the cables according to the following instructions:

Note:

- To connect multiple Cognex Ecosystem Lights, a Multi-Light Hub light controller is required. The Multi-Light Hub is sold separately. For more information, see the *Multi-Light Hub Reference Manual*.
- This section only provides instructions for connecting your camera to the CAM IO port of the In-Sight 6900. Make sure that you have also established an Ethernet connection as described in *Connecting the Ethernet Cables* on page 18.

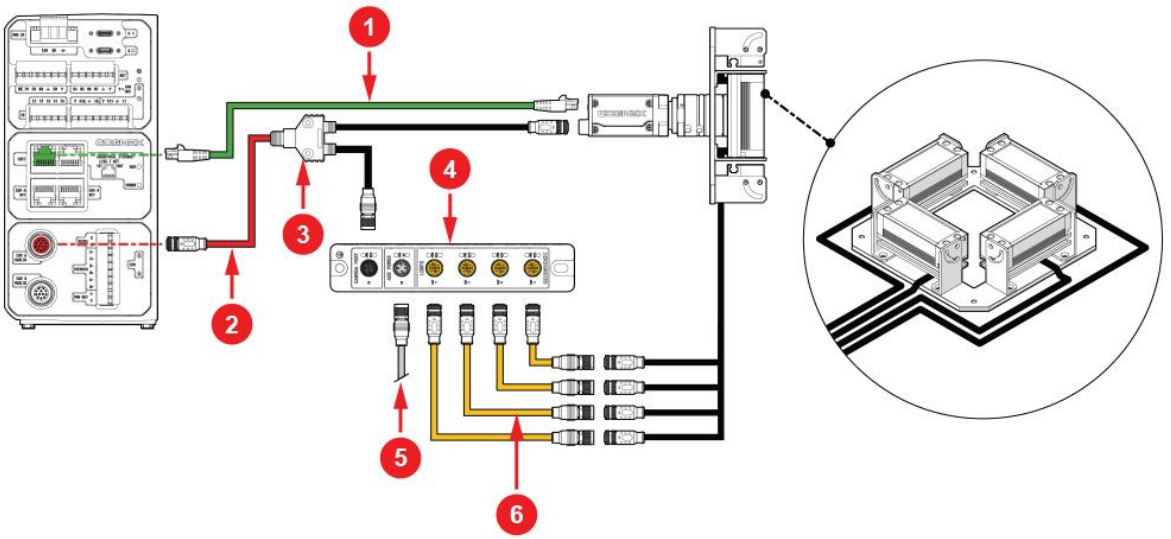

Element	Description
1	Ethernet cable (already connected)
2	CAM IO cable
3	Y-cable
4	Multi-Light Hub light controller
5	Auxiliary power cable
6	Light extension cable

1. Make sure that your vision controller is powered down before changing any connections.
2. Connect the CAM IO cable to one of the ports labeled CAM PWR/IO on your vision controller.
3. Connect the other end of the CAM IO cable to the M12 connector on the singular end of the appropriate Y-cable for the camera you want to connect.
4. Connect the M8 or Hirose HR10A connector of the Y-cable to the camera.
5. Connect the remaining M12 connector to the port of the Multi-Light Hub light controller that is labeled CAMERA PORT, using a light extension cable as necessary.

6. Connect up to four smart lights to the ports of the Multi-Light Hub that are labeled LIGHTS, using light extension cables as necessary.

Once connected, the camera can send STROBE signals to the Multi-Light Hub and the connected lights through the Y-cable connection. The vision controller automatically detects the smart light, and can control light parameters such as intensity.

The vision controller can provide power to both the camera and the Multi-Light Hub and connected lights, and also can send trigger signals to the camera through the CAM IO cable. You can also power the Multi-Light Hub and the connected lights with +24 V external power using the AUX POWER port.

Mounting the In-Sight 6900

The following sections describe the mounting options for the In-Sight 6900.

Mounting the In-Sight 6900 on a DIN Rail

The In-Sight 6900 vision controller housing has rubberized feet for stable placement, but also comes with attachable DIN rail mounts, which allow you to snap the vision controller onto any standard DIN rails for easy mounting.

1. Tilt the In-Sight 6900, and hook the bottom teeth of the DIN rail mounts onto the bottom lip of the rail.

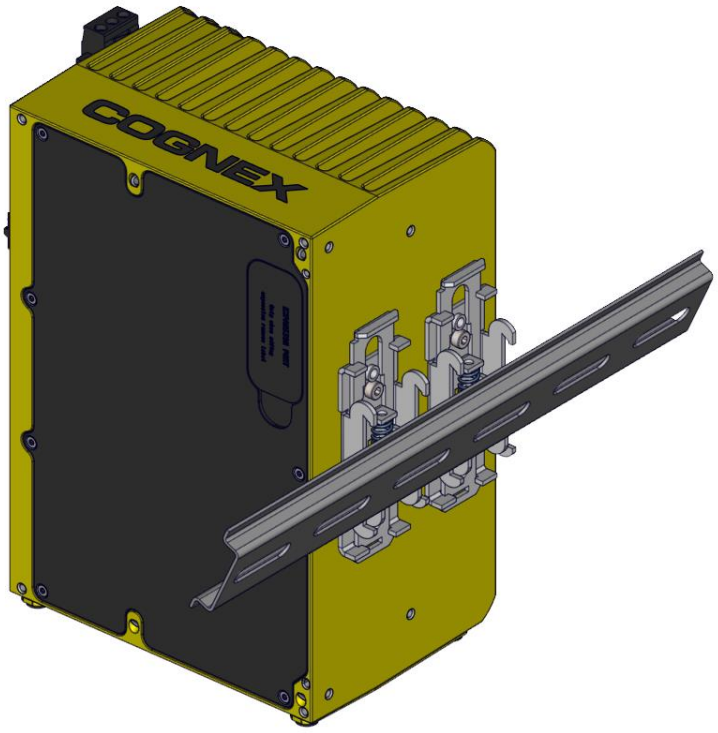

2. Tilt the In-Sight 6900 back, and push the top teeth of the DIN rail mounts onto the rail until the teeth snap on.

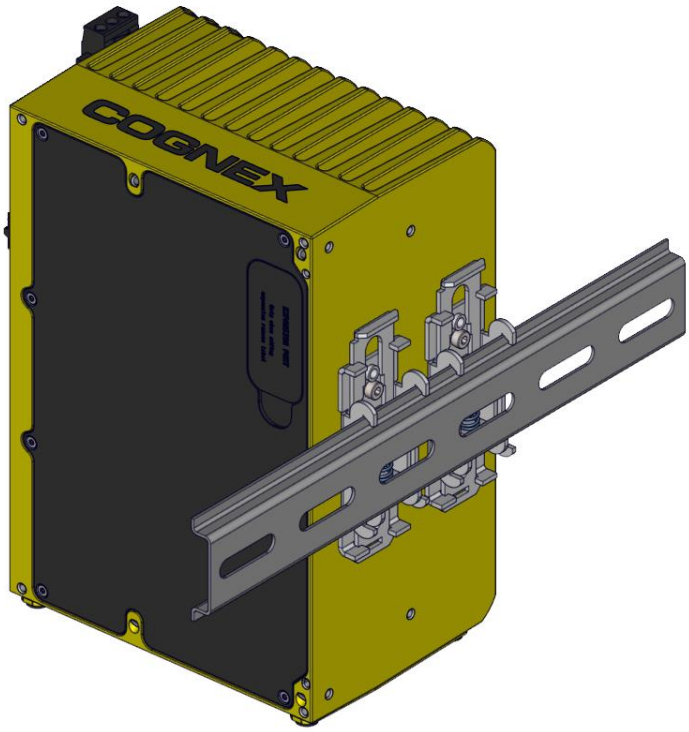

Using Your In-Sight Vision Controller

This section provides information on the installation of the In-Sight Vision Suite and industrial protocols.

Using In-Sight 6900 with In-Sight Vision Suite

To install and connect your In-Sight 6900 vision controller to In-Sight Vision Suite:

1. Connect the camera to the In-Sight 6900 vision controller.
2. Download the latest version of the In-Sight Vision Suite from support.cognex.com and follow the on-screen steps.
3. Connect the In-Sight 6900 vision controller to your PC.
4. Launch the In-Sight Vision Suite and click **Refresh**.
5. Select the In-Sight 6900 vision controller from the list and click **Connect**.

Industrial Protocols

The In-Sight 6900 vision controller supports the following industrial protocols:

- EtherNet/IP™
- PROFINET
- Modbus TCP
- SLMP
- EtherCAT

Specifications

The following sections list general specifications for the vision controller.

In-Sight 6900 Series Vision Controller

Specification	Model
Weight	570 g with no accessories attached
Material and Finish	Die-cast aluminum and zinc housing, painted
Mounting	Four M3 threaded mounting holes for DIN rail mount.
Power IN	24 V DC -15% – +20%, 6 A expected (rated to 12 A maximum)
Power Consumption	Average ≤ 30 W without load Maximum ≤ 130 W with load
Power Output to Remote Camera Subsystems	24 V DC at 1.6 A
Power Output to USB-C Port	5 V DC at 1.5 A
Case Temperature	Maximum 70 °C (158 °F)
Ambient Operating Temperature	0 °C – 30 °C (32 °F – 86 °F) 30 °C – 40 °C (86 °F – 104 °F) if airflow along cooling fins exceeds 0.5 m/s
Storage Temperature	-20 °C – 80 °C (-4 °F – 176 °F)
Humidity	<95 % non-condensing
Environmental Protection	IP40, altitude: 2000 m, indoor use only, pollution degree II
Shock (Shipping and Storage)	IEC 60068-2-27: 30 g over 18 ms, half-sine, 3 shocks in each axis in each direction (18 shocks total). ISTA-1A Standardized Testing - Packaged Products 150 lbs or less
Vibration (Shipping and Storage)	IEC 60068-2-6 - vibration test in each of the three main axis for 10 cycles from 10 Hz to 500 Hz with 100 m/s² acceleration or 0.75 mm amplitude. FedEx Vibration Testing - Packaged products 150 lbs or less
Job Processing Memory	16 GB
Image Processing Memory	Dynamic Allocation shared with Job Processing Memory
Job and Image Storage Memory	256GB non-volatile flash memory and unlimited storage through remote network device.
Trigger	2 opto-isolated acquisition trigger inputs
	V_{IH}: 11 V
Inputs	4 general-purpose inputs
	V_{IL}: 5 V
	I_{TYP}: < 5 mA
Low-Speed Outputs	4 low-speed general-purpose outputs
	I_{MAX}: 100 mA
	R_{MIN}: 10 Ω

Specification	Model
High-Speed Outputs	4 high-speed general-purpose outputs
	I_{MAX}: 100 mA
	R_{MIN}: 10 Ω
Status LEDs	Run and Error LEDs
Ethernet	10/100/1000. Full duplex or half duplex. • 2x 5 GB Ethernet ports • 1x 1 GB Port for Data Communication & Configuration • 1x 1GB Port for Industrial Ethernet • IEEE 802.3 TCP/IP Protocol
Communication Protocols	Industrial Ethernet (PROFINET, EtherNet/IP, EtherCAT, SLMP, ModbusTCP) & Data Communication (MQTT, TCP/IP, (S)FTP, RS-232C)
Regulations/Conformity	CE, FCC, KCC, TÜV SÜD NRTL, EU RoHS, China RoHS

3-Pin Power Connector

You can power your In-Sight 6900 vision controller using the 3-pin power connector:

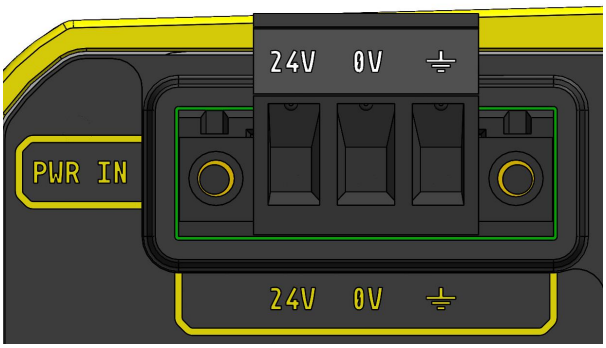

Specification	Description
Power	Nominal 24 V DC -15% – +20%
IEC Standard	IEC 61131-2
Maximum current	12 A

CAUTION: The negative power return (0V) is internally connected to the protective earth (PE or ⏚) chassis of the In-Sight 6900 vision controller. To prevent ground loops and to ensure safe operation, the external 24 V DC power source must be a Protective Extra-Low Voltage (PELV) power supply. Do not use an ungrounded Separated Extra-Low Voltage (SELV) power supply if external grounding is already established.

USB Connectors

In-Sight 6900 vision controllers have two USB-C connectors, labeled A and B:

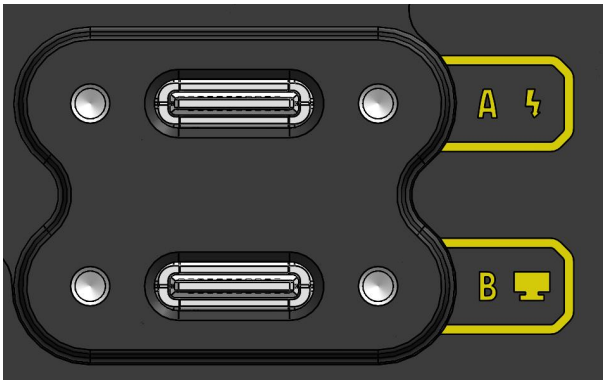

Specification	USB-C Connector A	USB-C Connector B
Connection type	Device only	Host only **Note**: The functionality of this port is not supported currently.
Allowed power roles	Dual-role power Out: 5 V, 0.5/1 A In: 20 V, 3 A	Source only Out: 5 V, 0.5/1.5 A
Data function	Dual Role Data (DRD)	Downstream Facing Port (DFP)
Speed	USB3 Gen2x1 (10 GBit/s)	USB3 Gen2x1 (10 GBit/s)
Additional functions	Powering only	Display port out with USB2 concurrency
USB PD-compliant	Yes	Yes

Isolated High-Speed Outputs

In-Sight 6900 vision controllers provide a set of isolated high-speed outputs on the first output terminal block.

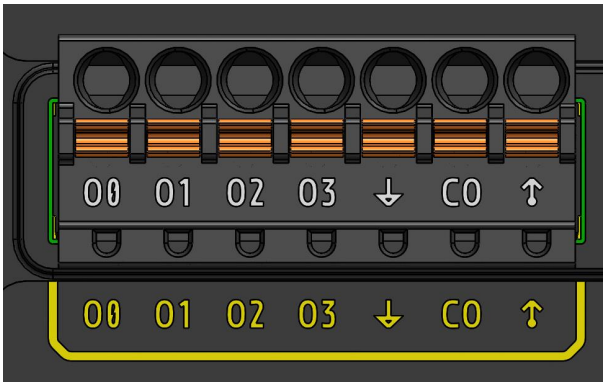

Specification	Description
Voltage	28 V DC maximum through external load
Current	100 mA maximum sink or source current
	100 µA OFF state leakage current
	240 Ω to 10 kΩ external load resistance
	Each line rated at a maximum 50 mA, protected against over-current, short circuits and transients from switching inductive loads. High current inductive loads require an external protection diode.
IEC standard	IEC 61131-2 Type 0.1

The digital outputs can be used as either NPN (pull-down) or PNP (pull-up) lines.

For NPN lines, connect the external load between the output and the positive supply voltage (< 28 V DC). The output pulls down to less than 3 V DC when ON, which causes current to flow through the load. When the output is OFF, no current flows through the load.

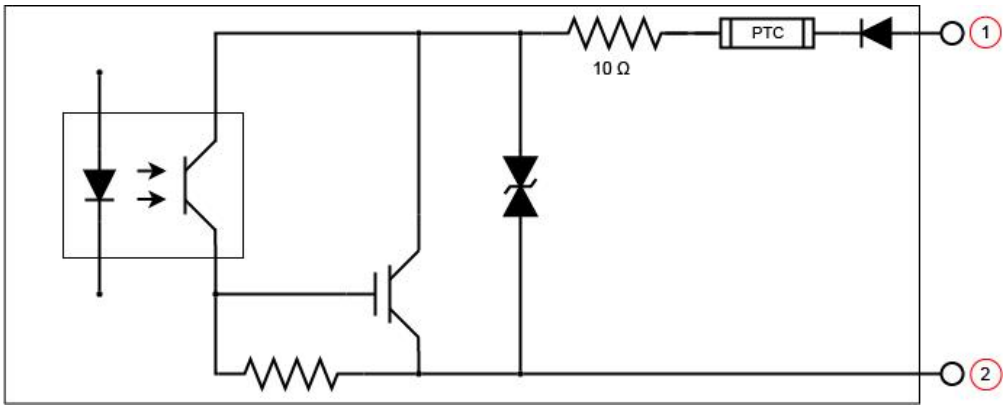

Number	Output
1	NPN OUT
2	COMMON OUT

For PNP lines, connect the external load between the output and the negative supply voltage (0 V DC). When connected to a 24 V DC power supply, the output pulls up greater than 21 V DC when ON, and current flows through the load. When the output is OFF, no current flows through the load.

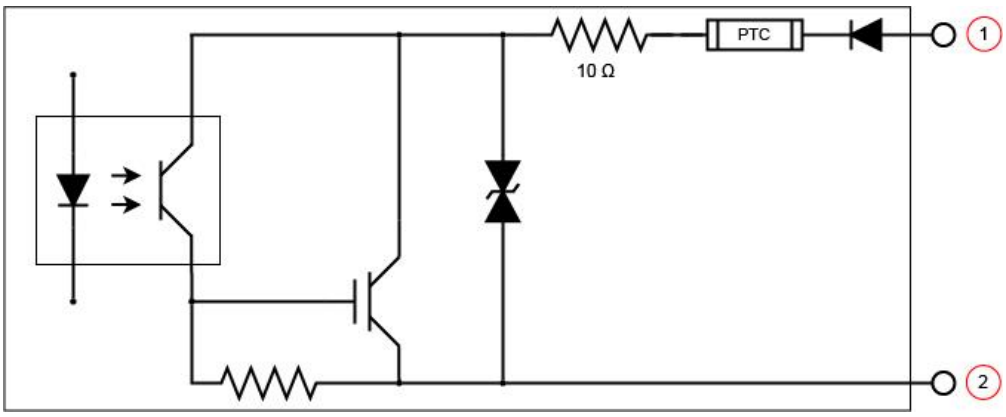

Number	Output
1	COMMON OUT
2	PNP OUT

High Speed Output Wiring

To connect to an NPN-compatible PLC input, connect one of the vision controller's high-speed outputs directly to the PLC input. When enabled, the output pulls the PLC input down to less than 3 V DC.

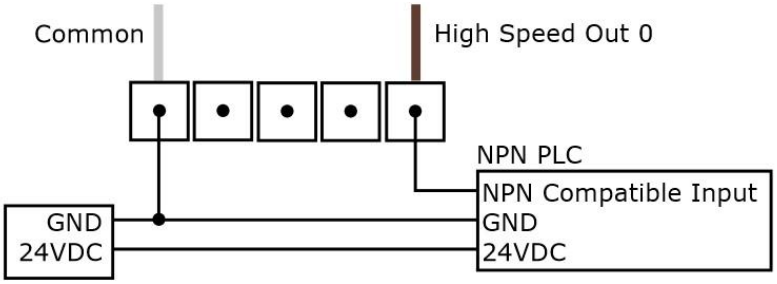

To connect to a PNP-compatible PLC input, connect one of the vision controller's high-speed outputs directly to the PLC input. When enabled, the output pulls the PLC input up to greater than 21 V DC.

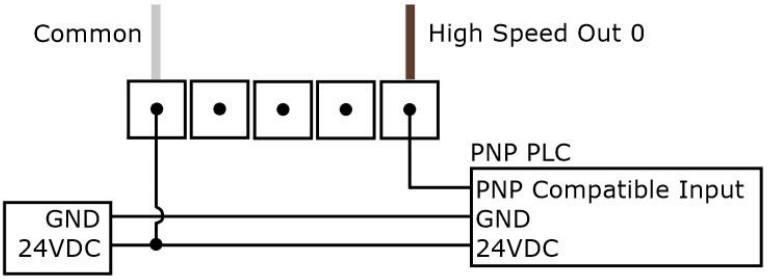

To connect the high-speed outputs to a relay, LED or similar load, connect the negative side of the load to the output and the positive side to +24 V DC. When the output switches on, the negative side of the load is pulled down to less than 3 V DC, and 21 V DC appears across the load. Use a protection diode for a large inductive load, with the anode connected to the output and the cathode connected to +24 V DC.

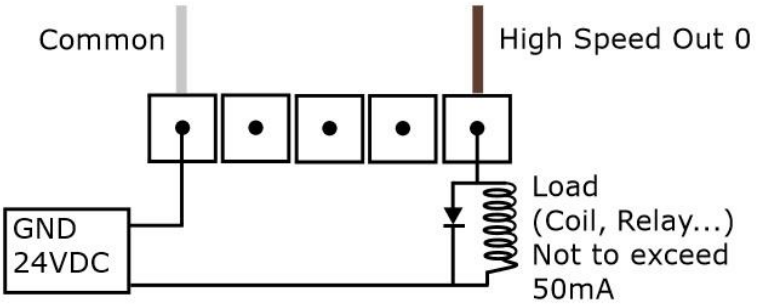

Non-Isolated Low-Speed Outputs

In-Sight 6900 vision controllers provide a set of slower non-isolated outputs on the second output terminal block.

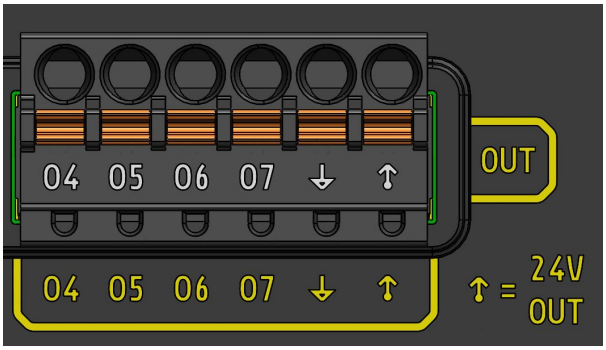

Specification	Description
Voltage	28 V DC maximum through external load
Current	100 mA maximum sink or source current
	100 µA OFF state leakage current
	240 Ω to 10 kΩ external load resistance
	Each line rated at a maximum 50 mA, protected against over-current, short circuits and transients from switching inductive loads. High current inductive loads require an external protection diode.
IEC standard	IEC 61131-2 Type 0.1

High-Speed Inputs

In-Sight 6900 vision controllers provide a set of isolated high-speed inputs on the input terminal blocks.

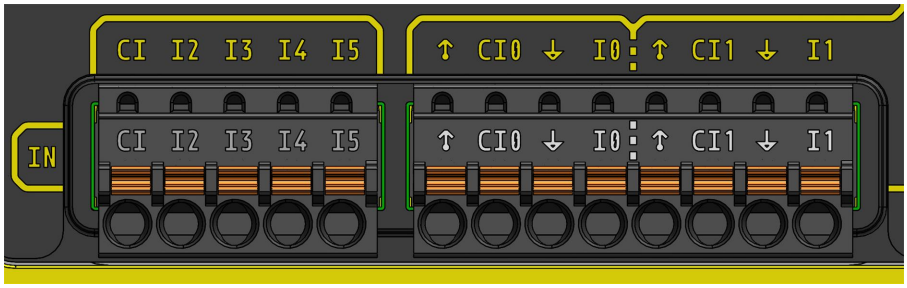

Specification	Description
Voltage range	12 to 30 V
Current	2.5 mA input limit
Maximum input frequency	500 kHz with up to 15 m of Cognex cables
IEC standard	IEC 61131-2 Type 1, 2, 3

The vision controller features two acquisition trigger inputs on I0 and I1, which are optically isolated. I0 triggers the CAM A port, and I1 triggers the CAM B port. You can configure the acquisition trigger inputs to trigger from an NPN (current sinking) or PNP (current sourcing) device.

- To trigger from an NPN type photoelectric sensor or PLC output, connect COMMON IN to +24 VDC and connect IN 0 to the output of the photoelectric sensor. When the output turns ON, it pulls TRIGGER down to 0 VDC, turning the opto-coupler ON.
- To trigger from a PNP photoelectric sensor or PLC output, connect IN 0 to the output of the photoelectric sensor an connect COMMON IN to 0 VDC. When the output turns ON, it pulls TRIGGER up to +24 VDC, turning the opto-coupler ON.

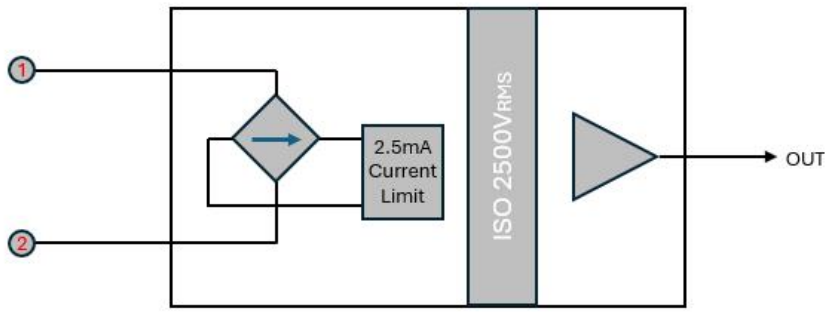

Number	Input
1	**IN 0**
2	**COMMON IN**

Cable Specifications

CAM IO Area Scan Cable

The CAM IO Area Scan Cable connects the vision controller to an area scan camera through a Y-cable, providing power, acquisition trigger input, general-purpose inputs, and high-speed outputs.

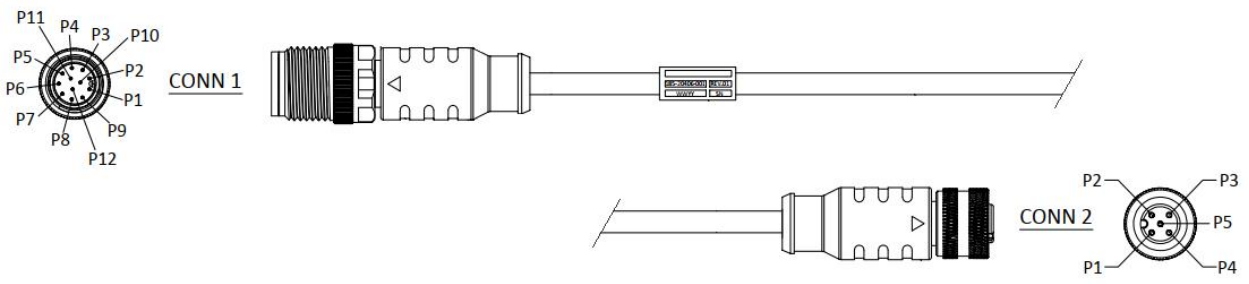

CONN 1	CONN 2
7	1
12	2
8	3
10	4
SHELL	SHELL

CAM IO Line Scan Cable

The CAM IO Line Scan Cable connects the vision controller to a line scan camera through a Y-cable, providing power, acquisition trigger input, general-purpose inputs, and high-speed outputs.

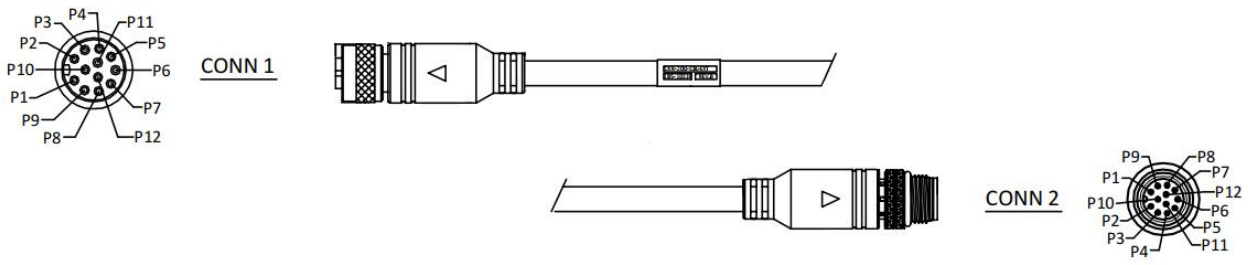

AWG	CONN 1		COLOR	CONN 2
24	1	Twisted pair	YELLOW	1
	2		WHITE/YELLOW	2
	3	Twisted pair	BROWN	3
	4		WHITE/BROWN	4
	5	Twisted pair	PURPLE	5
	6		WHITE/PURPLE	6
	7		RED	7
	8		BLACK	8
	9		GREEN	9
	10		ORANGE	10
	11		BLUE	11
	12		GRAY	12
SHIELD	SHELL		BRAID+DRAIN	SHELL

Area Scan Y-Cable, Standard Resolution

The Standard Resolution Area Scan Y-Cable with M8 6-pin connector connects the CAM IO Area Scan cable to an area scan camera on one side and a smart lights setup on the other side, providing power, acquisition trigger input, general-purpose inputs, and high-speed outputs.

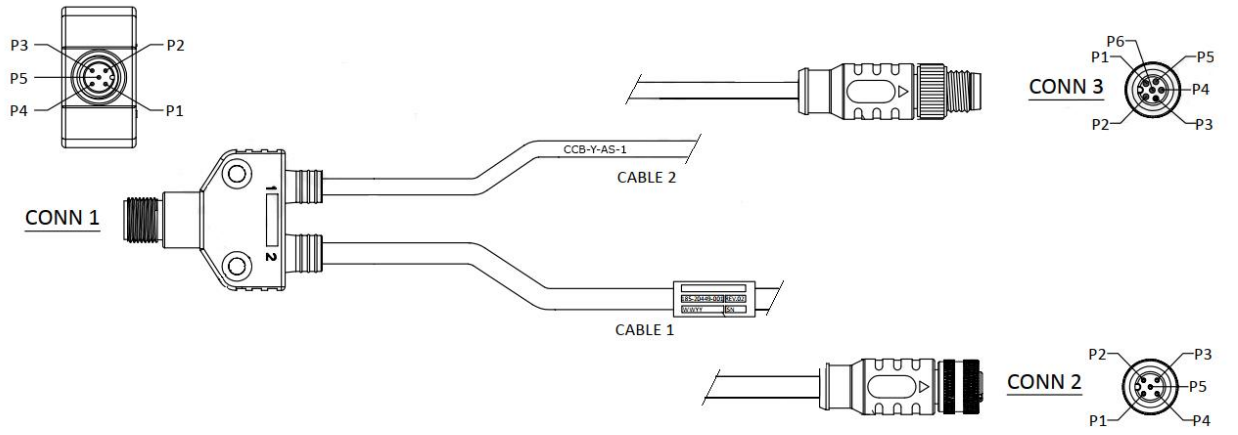

CONN 1	CONN 2	CONN 3
1	1	-
	-	1
2	2	-
3	3	-
	-	6
4	-	4
-	4	-
	-	5
SHELL	SHELL	SHELL

Area Scan Y-Cable, High Resolution

The High Resolution Area Scan Y-Cable with Hirose HR12A 12-pin connector connects the CAM IO Area Scan cable to an area scan camera on one side and a smart lights setup on the other side, providing power, acquisition trigger input, general-purpose inputs, and high-speed outputs.

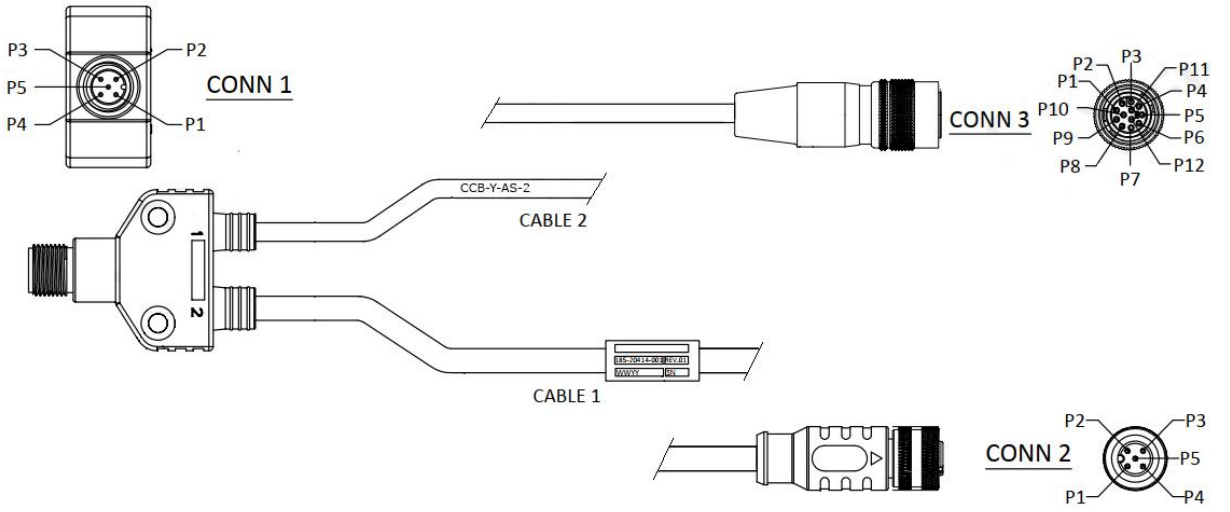

CONN 1	CONN 2	CONN 3
1	1	-
	-	-
-	-	2
-	-	9
2	2	-
3	3	-
	-	-
-	-	1
-	-	8
4	-	5
-	4	-
-	-	12
SHELL	SHELL	SHELL

Line Scan Y-Cable, Standard Resolution

The Standard Resolution Line Scan Y-Cable with M8 6-pin connector connects the CAM IO Line Scan cable to a line scan camera on one side and a smart lights setup on the other side, providing power, acquisition trigger input, general-purpose inputs, and high-speed outputs.

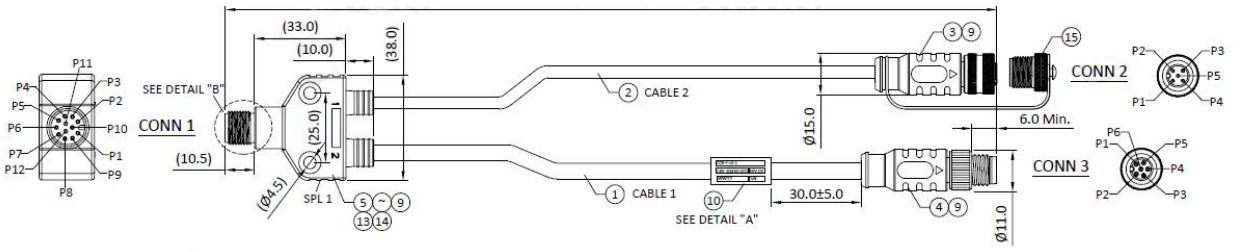

CONN 1	CONN 2	CONN 3
4	-	4
7	1	-
	-	1
8	3	-
	-	3
10	-	2
12	2	-
11	4	-
	-	5
SHELL	SHELL	SHELL

Line Scan Y-Cable, High Resolution

The High Resolution Line Scan Y-Cable with Hirose HR10A 12-pin connector connects the CAM IO Line Scan cable to a line scan camera on one side and a smart lights setup on the other side, providing power, acquisition trigger input, general-purpose inputs, and high-speed outputs.

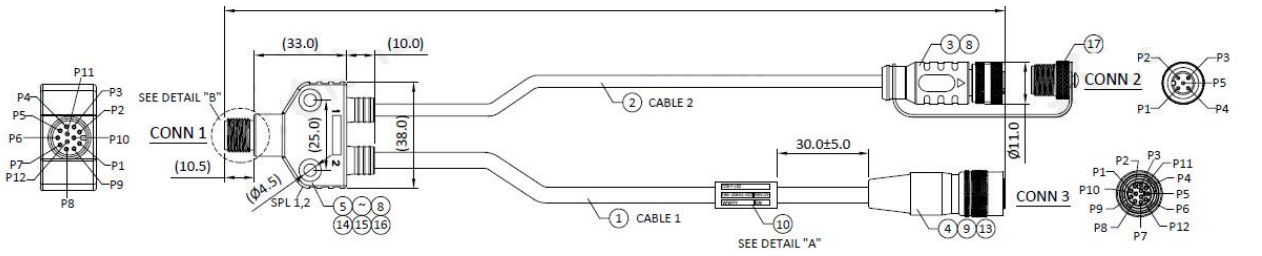

CONN 1	CONN 2	CONN 3
1	-	6
2	-	7
3	-	4
4	-	3
7	1	-
	-	2
-	4	-
	-	8
11	-	11
12	2	-
10	-	9
8	3	-
	-	-
-		1
		5
SHELL	SHELL	SHELL

Light Extension Cable

The light extension cable can connect the light connector of any Y-Cable to a smart light, allowing for longer connections.

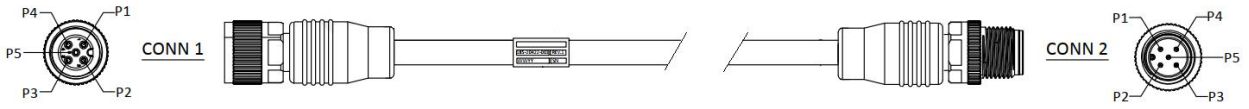

CONN 1	CONN 2
1	1
2	2
3	3
4	4

Cleaning and Maintenance

Clean the Housing

To clean the outside of the vision controller housing, use a small amount of mild detergent cleaner or isopropyl alcohol on a cleaning cloth. Do not pour the cleaner on the vision controller housing.

⚠ **CAUTION**: Do not attempt to clean any In-Sight product with harsh or corrosive solvents, including lye, methyl ethyl ketone (MEK) or gasoline.

Regulations and Conformity

The In-Sight 6900 vision controller has the Regulatory Model 50169 and meets or exceeds the requirements of all applicable standards organizations for safe operation. However, as with any electrical equipment, the best way to ensure safe operation is to operate them according to the agency guidelines that follow. Please read these guidelines carefully before using your vision controller.

Note: For the most current CE and UKCA declaration and regulatory conformity information, see the Cognex support site: cognex.com/support.

Safety and Regulatory	
Manufacturer	Cognex Corporation One Vision Drive Natick, MA 01760 USA
CE	Model Name: Regulatory Model 50169 This is a class A product. In a domestic environment this product may cause radio interference in which case the user may be required to take immediate measures. This equipment complies with the essential requirements of the EU Directive 2014/30/EU. Declarations are available from your local representative.
EU RoHS	Compliant to the most recent applicable directive.
FCC	FCC Part 15, Class A This equipment has been tested and found to comply with the limits for a Class A digital device, pursuant to part 15 of the FCC Rules. These limits are designed to provide reasonable protection against harmful interference when the equipment is operated in a commercial environment. This equipment generates, uses, and can radiate radio frequency energy and, if not installed and used in accordance with the instruction manual, may cause harmful interference to radio communications. Operation of this equipment in a residential area is likely to cause harmful interference in which case the user will be required to correct the interference at his own expense.
Korea	Regulatory Model 50169: R-R-CGX-50169 This device is certified for office use only and if used at home, there can be frequency interference problems.
TÜV	Regulatory Model 50169
	NRTL: TÜV SÜD SCC/NRTL OSHA Scheme for UL/CAN 61010-1.
	CB report available upon request. TÜV SÜD, IEC/EN 61010-1.

For European Community Users

Cognex complies with Directive 2012/19/EU OF THE EUROPEAN PARLIAMENT AND OF THE COUNCIL of 4 July 2012 on waste electrical and electronic equipment (WEEE).

This product has required the extraction and use of natural resources for its production. It may contain hazardous substances that could impact health and the environment, if not properly disposed.

In order to avoid the dissemination of those substances in our environment and to diminish the pressure on the natural resources, we encourage you to use the appropriate take-back systems for product disposal. Those systems will reuse or recycle most of the materials of the product you are disposing in a sound way.


The crossed out wheeled bin symbol informs you that the product should not be disposed of along with municipal waste and invites you to use the appropriate separate take-back systems for product disposal.

If you need more information on the collection, reuse, and recycling systems, please contact your local or regional waste administration.

You may also contact your supplier for more information on the environmental performance of this product.

中国 RoHS 合规声明 / China RoHS Compliance Declaration

根据《电器电子产品有害物质限制使用管理办法》(GB 26572-2025) 及《电器电子产品有害物质限制使用标识要求》(SJ/T 11364-2024) , 本公司对所提供产品的有害物质含量进行如下声明:

In accordance with the "Administrative Measures on the Restriction of Hazardous Substances in Electrical and Electronic Products" (GB 26572-2025) and "Marking for the Restriction of Hazardous Substances in Electrical and Electronic Products" (SJ/T 11364-2024), our company hereby declares the hazardous substance content in the provided products as follows:



部件名称 Part Name	铅 (Pb)	汞 (Hg)	镉 (Cd)	六价铬 (Cr^{6+})	多溴联苯 (PBB)	多溴二苯醚 (PBDE)	邻苯二甲酸二(2-乙基己)酯 (DEHP)	邻苯二甲酸丁苄酯 (BBP)	邻苯二甲酸二丁酯 (DBP)	邻苯二甲酸二异丁酯 (DIBP)
Regulatory Model 50169	X	O	O	O	O	O	O	O	O	O

说明 / Note:

“O”表示该有害物质在所有均质材料中的含量均低于 GB 26572-2025 的限量要求。

"O" indicates that the hazardous substance content in all homogeneous materials is below the limit requirement of GB 26572-2025.

“X”表示该有害物质在至少一个均质材料中的含量高于 GB 26572-2025 的限量要求。

"X" indicates that the hazardous substance content in at least one homogeneous material exceeds the limit requirement of GB 26572-2025.