MORITEX
A Cognex Company

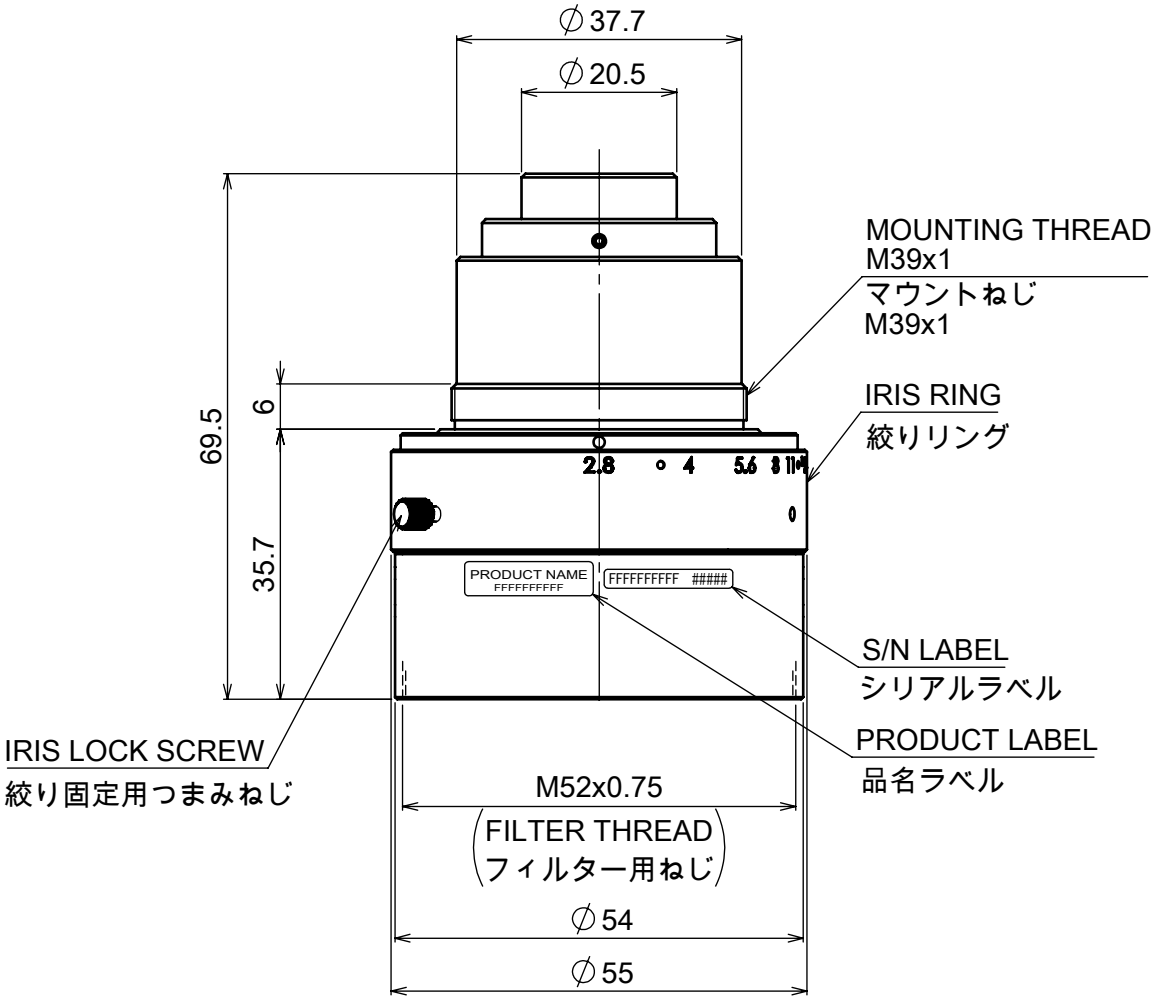

FOCAL LENGTH: 28mm
Fno: 2.8 ~ 22

Model Name : LMF-ML-2828-35M39