COGNEX

In-Sight® 8900 Series

Quick Reference Guide



2026 September 24

Revision: 26.2.1.2

Precautions

To reduce the risk of injury or equipment damage, observe the following precautions when you install the Cognex product:

- The vision system requires a UL or NTRL listed power supply with a 24 VDC output that meets the following rating requirements:
    - At least 24 V DC (+/- 10%) output connection using a UL or NTRL listed LPS or NEC Class 2 power supply

  Any other voltage creates a risk of fire or shock and can damage the components. Applicable national and local wiring standards and rules must be followed.
- This product is a machine vision sensor intended for industrial use in automated manufacturing or similar applications.
- The safety of any system incorporating this product is the responsibility of the assembler of the system.
- Do not install Cognex products where they are exposed to environmental hazards such as excessive heat, dust, moisture, humidity, impact, vibration, corrosive substances, flammable substances, or static electricity.
- Route cables and wires away from high-current wiring or high-voltage power sources to reduce the risk of damage or malfunction from the following causes: over-voltage, line noise, electrostatic discharge (ESD), power surges, or other irregularities in the power supply.

- Do not expose the image sensor to laser light. Image sensors can be damaged by direct, or reflected, laser light. If your application requires laser light that might strike the image sensor, use a lens filter at the corresponding laser wavelength. For suggestions, contact your local integrator or application engineer.
- This product does not contain user-serviceable parts. Do not make electrical or mechanical modifications to product components. Unauthorized modifications can void your warranty.
- Changes or modifications not expressly approved by the party responsible for regulatory compliance could void the user's authority to operate the equipment.
- Include service loops with cable connections.
- Ensure that the cable bend radius begins at least six inches from the connector. Cable shielding can be degraded or cables can be damaged or wear out faster if a service loop or bend radius is tighter than 10X the cable diameter.
- This device should be used in accordance with the instructions in this manual.
- All specifications are for reference purposes only and can change without notice.

Symbols

The following symbols indicate safety precautions and supplemental information:



WARNING: This symbol indicates a hazard that could cause death, serious personal injury or electrical shock.



CAUTION: This symbol indicates a hazard that could result in property damage.



Note: This symbol indicates additional information about a subject.



Tip: This symbol indicates suggestions and shortcuts that might not otherwise be apparent.

Accessories

You can purchase the following components separately. For a list of options and accessories, contact your local Cognex sales representative.

Lenses

Accessory	Product Number	Illustration	IS8900	IS8902	IS8905	IS8912
6 mm Moritex UR series lens	ML-M0625UR		✓	✓	✓	
8 mm Moritex UR series lens	ML-M0822UR					
12 mm Moritex UR series lens	ML-M1218UR					
16 mm Moritex UR series lens	ML-M1616UR					
25 mm Moritex UR series lens	ML-M2516UR					
35 mm Moritex UR series lens	ML-M3520UR					
50 mm Moritex UR series lens	ML-M5025UR					

Accessory	Product Number	Illustration	IS8900	IS8902	IS8905	IS8912
16 mm HSLL - high resolution	CLN-C16F65-HSLL-HR		✓	✓	✓	✓
25 mm HSLL - high resolution	CLN-C25F65-HSLL-HR					
35 mm HSLL - high resolution	CLN-C35F06-HSLL-HR					

Accessory	Product Number	Illustration	IS8900	IS8902	IS8905	IS8912
6 mm Moritex SR series lens	ML-U0618SR-18C					✓
8 mm Moritex SR series lens	ML-U0817SR-18C					
12 mm Moritex SR series lens	ML-U1217SR-18C					
16 mm Moritex SR series lens	ML-U1615SR-18C					
25 mm Moritex SR series lens	ML-U2515SR-18C					
35 mm Moritex SR series lens	ML-U3518SR-18C					
50 mm Moritex SR series lens	ML-U5022SR-18C					

Note: Moritex lenses previously had the prefix LMC in the product number (for example ML-M0625UR was previously named LMC-ML-M0625UR). If you purchased a Moritex lens under the previous product number, you can still refer to this compatibility table using the product number without the LMC prefix.

Cables

Note: Cables are sold separately.

Accessory	Product Number	Illustration
Ethernet Cable, X-coded M12-8 to RJ-45	CCB-84901-2001-xx (straight, xx specifies length: 2m, 5m, 10m, 15m, 30m)	
Ethernet Cable, Robotic X-Coded M12-8 to RJ-45	CCB-84901-2RBT-xx (straight, xx specifies length: 2m, 5m, 10m)	
Breakout cable, M8-8 Flying Lead Cable	CCB-PWRIOM8-S-xx (xx specifies length: 2m, 5m, 10m, 15m)	
Breakout cable, M8-8 Flying Lead Right Angle Cable	CCB-PWRIOM8-R-xx (xx specifies length: 5m, 10m)	

Accessory	Product Number	Illustration
M8-5 to M8-8 Adapter Cable	CCB-M8CONVTR	

Mounting Brackets

Accessory	Product Number	Illustration
Mounting Bracket	BKT-IS8K-01	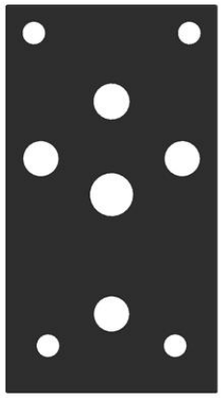

Setting Up Your In-Sight Vision System

Read this section to learn how the vision system connects to its standard components and accessories.

Vision System Layout

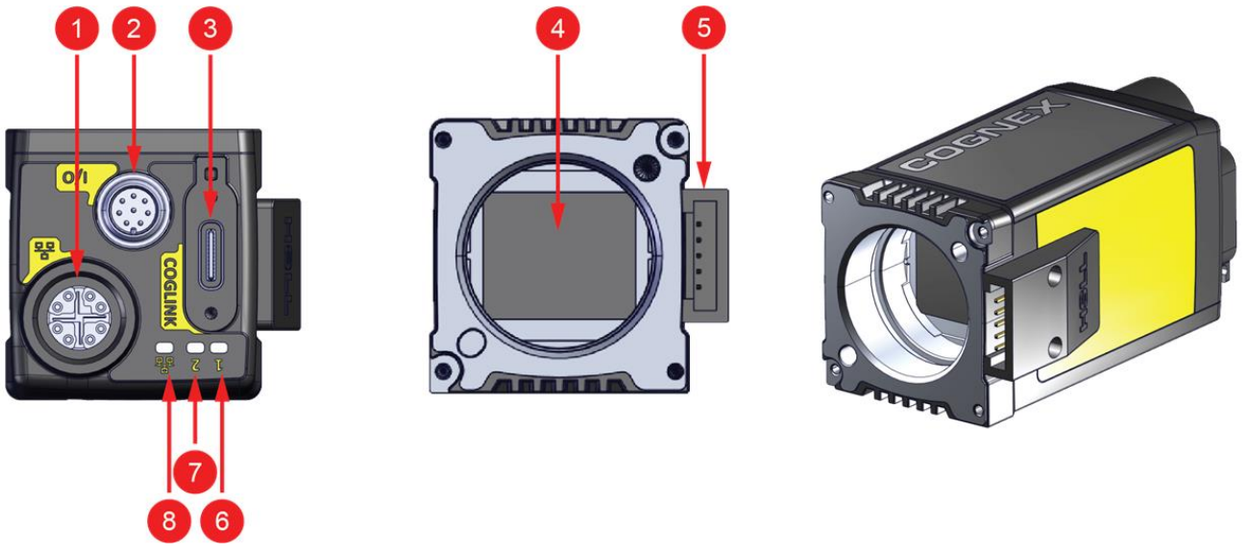

Number	Description
1	Ethernet connector
2	M8x8 Power I/O Breakout cable connector
3	Coglink/USB-C connector
4	Imager/C-mount flange
5	High Speed Liquid Lens connector (optional configuration)
6	LED 1
7	LED 2

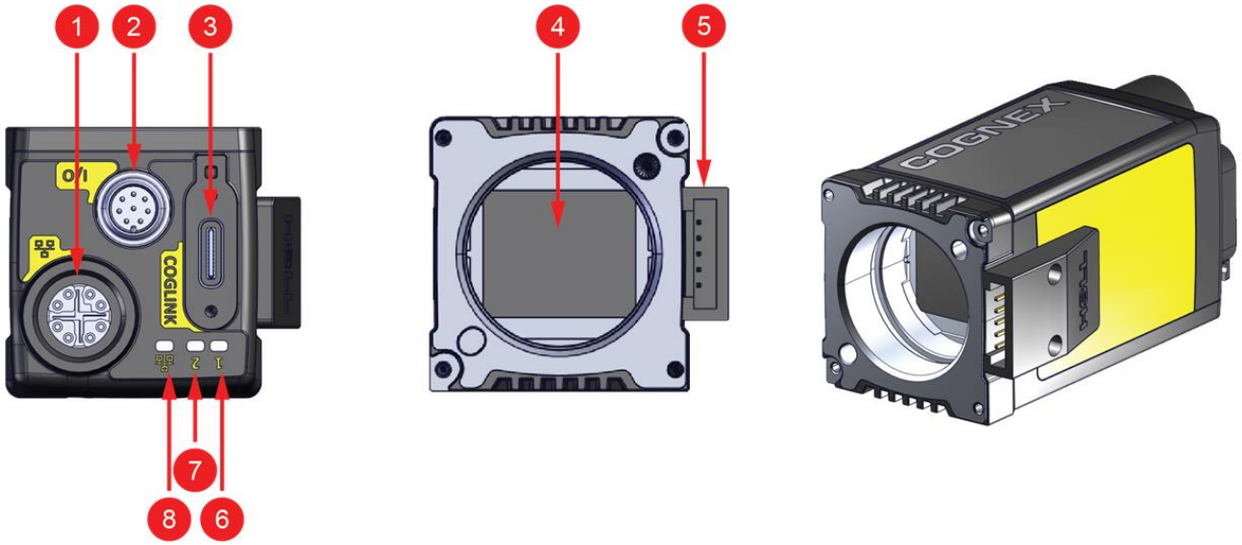

Number	Description
8	Ethernet status indicator

Dimensions

The following sections list dimensions of the vision system.

Note:

- Dimensions are in millimeters [inches] and are for reference purposes only.
- All specifications are for reference purposes only and can change without notice.

In-Sight 8900 Vision System Only

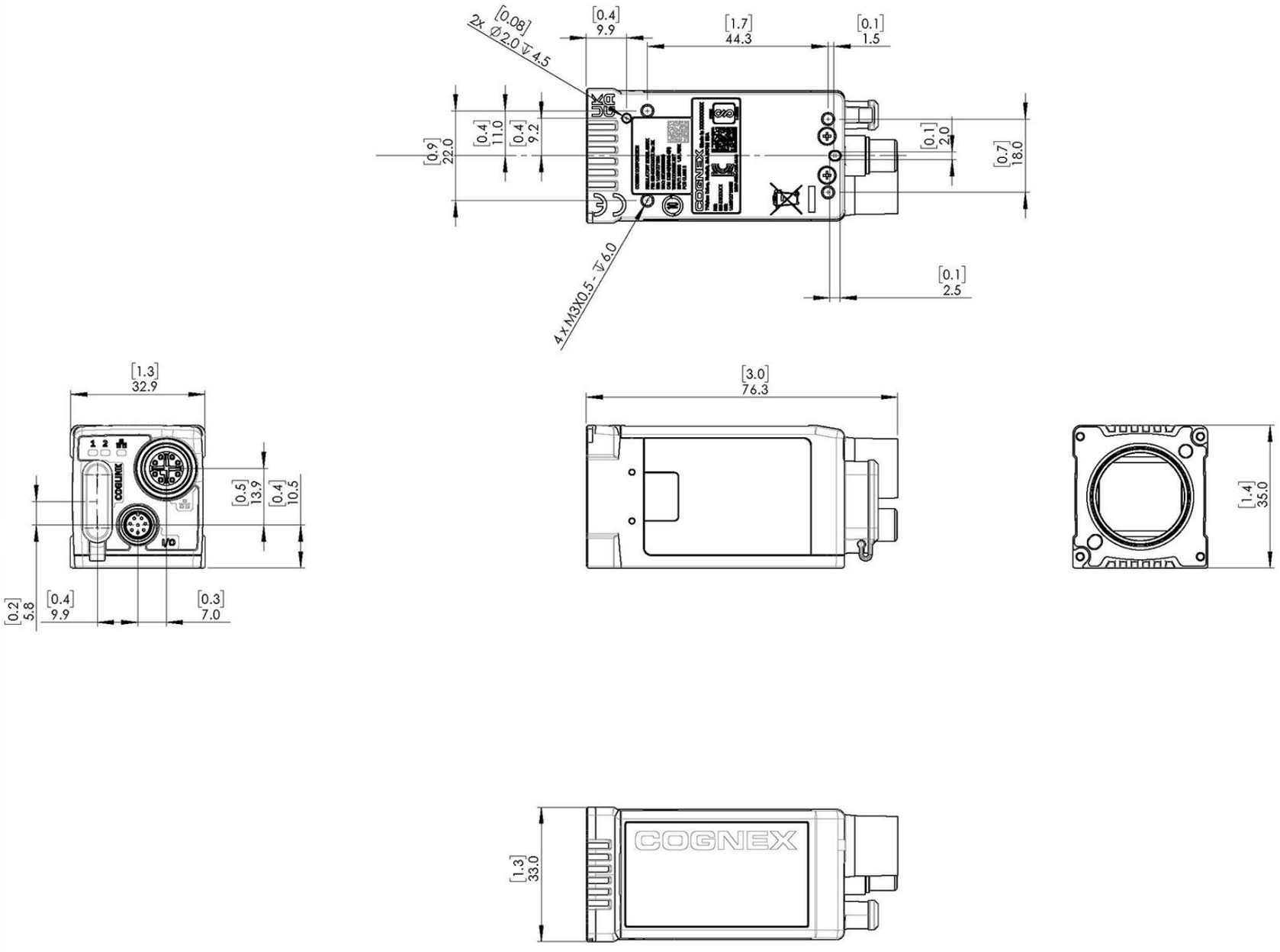

In-Sight 8900 with High Speed Liquid Lens Connector

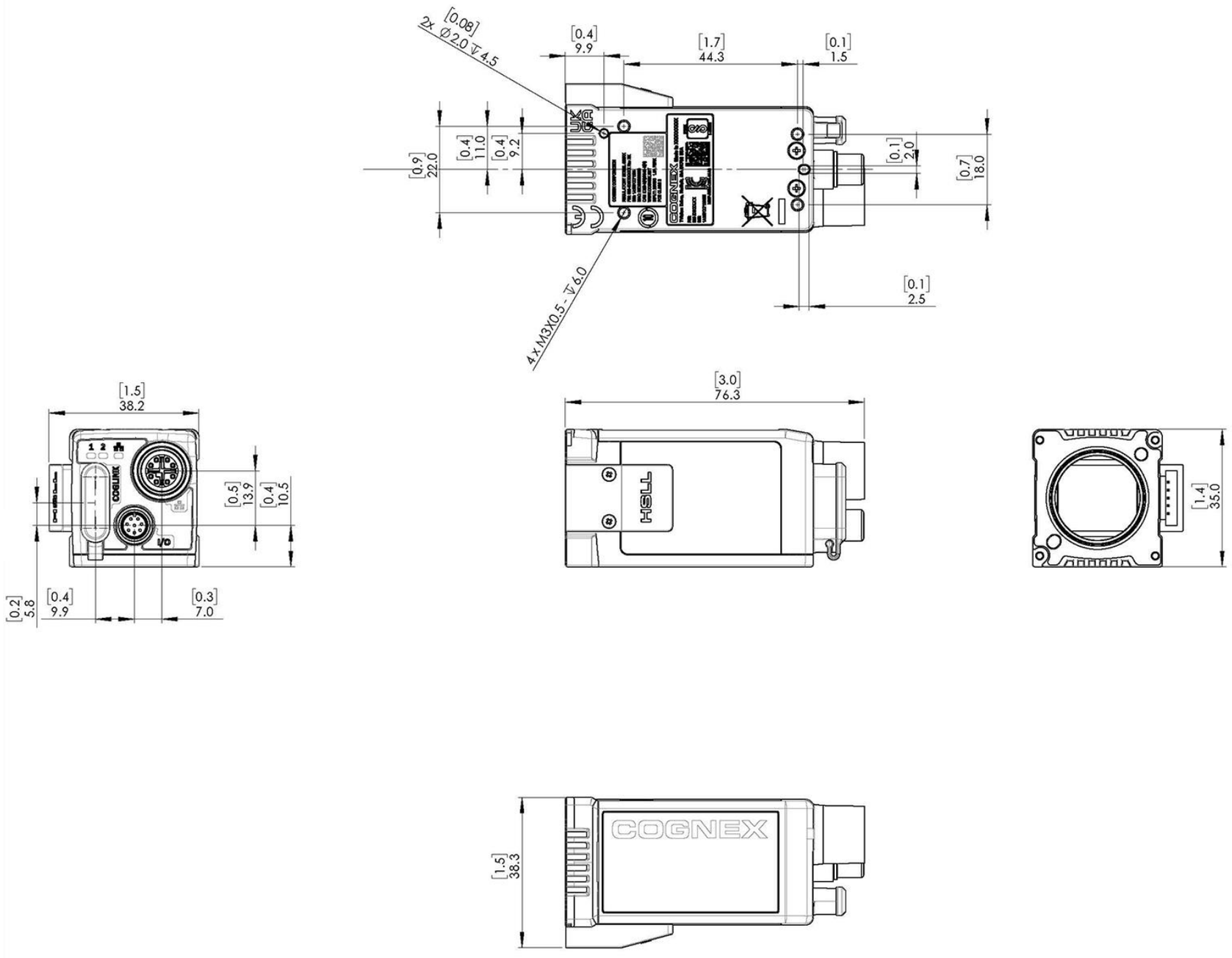

In-Sight 8900 with High Speed Liquid Lens Installed

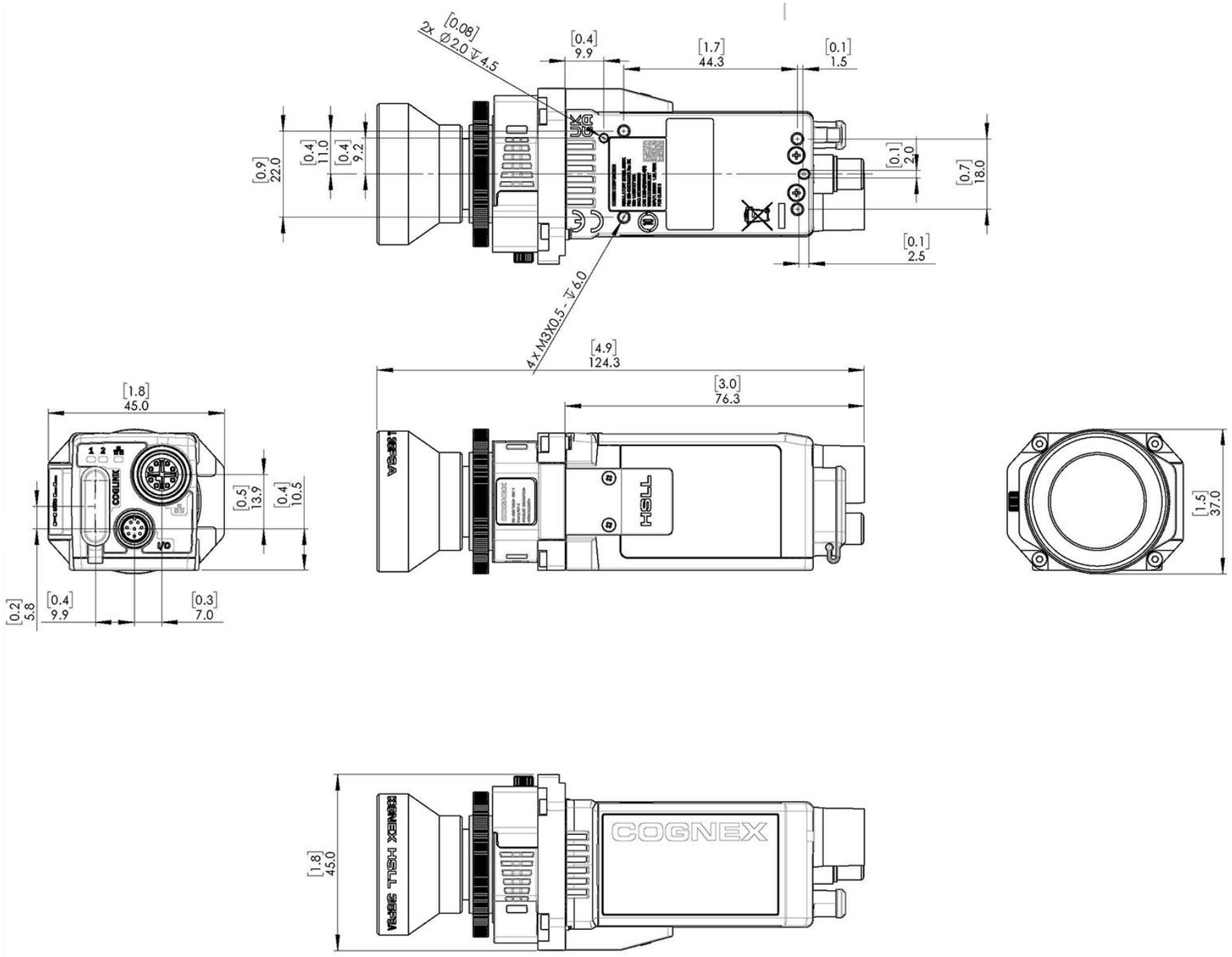

Installing a C-Mount Lens

1. Remove the adhesive protective film.
2. Thread the lens into the vision system.
3. Place the vision system at the desired working distance from focus target.
    a. Connect the vision system to the In-Sight Vision Suite.
    b. Navigate to the Optimize Image pane.
    c. On the Basic tab, click the **triangle** on the Live button to access the drop-down list and check the **Focus Feedback** option.
    d. Use the In-Sight Focus Target template, available through the Windows Start menu or the In-Sight Vision Suite **Help** menu, to align the edge of the reader body to the line marked with the target distance used in your application.
    e. Adjust focus for maximum sharpness. Enhance image quality in the In-Sight Vision Suite for better guidance.
4. Attach the front cover.

Install the Mounting Bracket

The vision system provides mounting holes for attachment to a mounting surface.

CAUTION: You must ground the vision system, either by mounting the vision system to a fixture that is electrically grounded or by attaching a wire from the mounting fixture on the vision system to frame ground or earth ground. If you use a ground wire, attach the wire to one of the four mounting points on the back plate of the vision system and not to the mounting points on the front of the vision system.

Note: If using the 1/4-20 or M6 mounting holes, the thread length of the screw cannot exceed 8 mm.

---

1. Align the holes on the mounting surface with the mounting holes on the vision system.
2. Insert the M3 screws into the mounting holes and tighten using a 2.5 mm hex wrench. The maximum torque is 0.3 Nm (2.5 in-lb).

Connecting the Ethernet Cable

CAUTION: The Ethernet cable shield must be grounded at the far end.Whatever this cable is plugged into (typically a switch or router) should have a grounded Ethernet connector. A digital voltmeter should be used to validate the grounding. If the far end device is not grounded, a ground wire should be added in compliance with local electrical codes.

1. Connect the M12 connector of the Ethernet cable to the vision system ENET connector.
2. Connect the RJ-45 connector of the Ethernet cable to a switch/router or PC, as applicable.

Note: Make sure that the vision system is connected only to internal Ethernet networks without exiting a facility and being subjected to TNVs.

Connecting the Power and I/O Breakout Cable

CAUTION: To reduce emissions, connect the far end of the Breakout cable shield to frame ground.

Note:

- Perform wiring or adjustments to I/O devices when the vision system is not receiving power.
- You can clip unused wires short or use a tie made of non-conductive material to tie them back. Keep bare wires separated from the +24 V DC wire.

1. Verify that the 24 V DC power supply is unplugged and not receiving power.
2. Attach the +24 V DC connector of the Power and I/O Breakout cable and Ground wires to the corresponding terminals on the power supply. For more information, see *Specifications* on page 21.

   CAUTION: Never connect voltages other than 24 V DC. Always observe the polarity shown.

3. Attach the M8 connector of the Power and I/O Breakout Cable to the 24 V DC connector of the vision system.
4. Restore power to the 24 V DC power supply and turn it on if necessary.

Specifications

The following sections list general specifications for the vision system.

In-Sight 8900 Series Vision System

Specification	Model
Memory	4 GB
Lens Type	C-Mount or Cognex High Speed Liquid Lens
Discrete Inputs	One opto-isolated, general purpose input
Discrete Outputs	Two opto-isolated, high speed outputs
Status LEDs	Network LED and two configurable LEDs
High Speed Liquid Lens Lifespan	1800 M focus cycles
Job/Program Memory	7.5 GB
Image Processing Memory	Dynamic allocation shared with Job/Program Memory
Network Communication	One Ethernet port, 10/100/1000 BaseT with auto MDIX IEEE 802.3 TCP/IP Protocol Supports DHCP, static, and link-local address configuration.

Specification	Model
Communication Protocols	TCP/IP, PROFINET, EtherNet/IP, SLMP, ModbusTCP, (S)FTP
Power Consumption	External LPS or NEC Class 2 power supply: 24 V DC ± 10% Class 3 Power over Ethernet (PoE) USB-C power 1.5 A maximum
Current and Voltage	24 V input: 24 V DC, 1.5 A peak, 250 mA average Power over Ethernet: Class 3 as per 802.3af, 37-57 V DC, 350 mA maximum USB-C : 5 V DC, 1.5A maximum
Material	Die-cast aluminum and zinc housing
Finish	Painted
Mounting	Four M3 threaded mounting holes. Pattern: 44.25 mm (1.74 in) length, 22 mm (0.87 in) width side 1, 18 mm (0.71 in) width side 2.
Weight	In-Sight 8900 with no accessories attached: 205 g (7.2 oz). With High Speed Liquid Lens (25 mm): 320 g (11.3 oz).
Ambient Operating Temperature	0° C to 40° C (32° F to 104° F) **Note**: Use the GetTemperature function to verify that the temperature of various components is in a safe operating range. Cognex recommends the temperature not exceed 70° C (158° F) for any component. You might need additional cooling measures to keep the vision system at a safe operating temperature. Examples of cooling measures include: • Mount the vision system to a heat sink using the M3 mounting screws. • Use the air-cooled bracket. • Reduce the ambient temperature and ensure there is air flow over the vision system.

Specification	Model
Storage Temperature	-20° C to 80° C (-4° F to 176° F)
Humidity	<95% non-condensing
Protection	IP40 with all cables properly attached and lens properly attached
Shock (Shipping and Storage)	IEC 60068-2-27: 18 shocks (3 shocks in each polarity in each (X, Y, Z) axis) 80 Gs (800 m/s2 at 11 ms, half-sinusoidal) with cables or cable plugs and a 150 gram or lighter lens attached.
Vibration (Shipping and Storage)	IEC 60068-2-6: vibration test in each of the three main axis for 2 hours at 10 Gs (10 to 500 Hz at 100 m/s2 / 15 mm) with cables or cable plugs and a 150 gram or lighter lens attached.
Regulations and Conformity	CE, FCC, KCC, EU RoHS, China RoHS
LIN	Compatible with the LIN 2.0, LIN 2.1, LIN 2.2, LIN 2.2A and O/DIS 17987-4.2 standards. Transmit data rate upto 20kbps

In-Sight 8900 Series Vision System Image Sensor

Specification	In-Sight 8900M	In-Sight 8900C	In-Sight 8902M	In-Sight 8902C	In-Sight 8905M	In-Sight 8905C	In-Sight 8912M	In-Sight 8912C
Bit Depth	8-bit monochrome	24-bit color	8-bit monochrome	24-bit color	8-bit monochrome	24-bit color	8-bit monochrome	24-bit color
Frames Per Second (Maximum, Full Resolution)	142	100	86	49	47	29	21	10
Image Sensor Type	CMOS, global shutter							
Image Sensor Properties	2.7 mm diagonal, 2.74 x 2.74 µm square pixels		6.2 mm diagonal, 2.74 x 2.74 µm square pixels		8.8 mm diagonal, 2.74 x 2.74 µm square pixels		14 mm diagonal, 2.74 x 2.74 µm square pixels	

Specification	In-Sight 8900M	In-Sight 8900C	In-Sight 8902M	In-Sight 8902C	In-Sight 8905M	In-Sight 8905C	In-Sight 8912M	In-Sight 8912C
Maximum Image Resolution (pixels)	800 x 600		1920 x 1200		2448 x 2048		4096 x 3000	
Electronic Shutter Speed	29.1 us to 200,000 us							

Regulations and Conformity

Note: For the most current CE and UKCA declaration and regulatory conformity information, see the Cognex support site: cognex.com/support.

Safety and Regulatory	
Manufacturer	Cognex Corporation One Vision Drive Natick, MA 01760 USA
CE	In-Sight 8900: Regulatory Model 50116 This is a class A product. In a domestic environment this product may cause radio interference in which case the user may be required to take immediate measures. This equipment complies with the essential requirements of the EU Directive 2014/30/EU. Declarations are available from your local representative.
EU RoHS	Compliant to the most recent applicable directive.
FCC	FCC Part 15, Class A This equipment has been tested and found to comply with the limits for a Class A digital device, pursuant to part 15 of the FCC Rules. These limits are designed to provide reasonable protection against harmful interference when the equipment is operated in a commercial environment. This equipment generates, uses, and can radiate radio frequency energy and, if not installed and used in accordance with the instruction manual, may cause harmful interference to radio communications. Operation of this equipment in a residential area is likely to cause harmful interference in which case the user will be required to correct the interference at his own expense.
Korea	Regulatory Model 50116: R-R-CGX-50116 This device is certified for office use only and if used at home, there can be frequency interference problems.
UL, TÜV	Regulatory Model 50116
	NRTL OSHA Scheme for UL/CAN 61010-1.
	CB report available upon request. TÜV SÜD, IEC/EN 61010-1.

Safety and Regulatory	
UK CA	In-Sight 8900: Regulatory Model 50116 This is a class A product. In a domestic environment this product may cause radio interference in which case the user may be required to take immediate measures. This equipment complies with the essential requirements of the Electromagnetic Compatibility Regulations 2016. Declarations are available from your local representative.

中国大陆RoHS (Information for China RoHS Compliance)

根据中国大陆《电子信息产品污染控制管理办法》(也称为中国大陆RoHS)，以下部份列出了本产品中可能包含的有毒有害物质或元素的名称和含量。



	Hazardous Substances 有害物质					
Part Name 部件名称	Lead (Pb) 铅	Mercury (Hg) 汞	Cadmium (Cd) 镉	Hexavalent Chromium (Cr (VI)) 六价铬	Polybrominated biphenyls (PBB) 多溴联苯	Polybrominated diphenyl ethers (PBDE) 多溴二苯醚
Regulatory Model 50116	X	O	O	O	O	O

This table is prepared in accordance with the provisions of SJ/T 11364.
这个标签是根据SJ / T 11364 的规定准备的。

O: Indicates that said hazardous substance contained in all of the homogeneous materials for this part is below the limit requirement of GB / T26572 - 2011.
表示本部件所有均质材料中含有的有害物质低于GB / T26572 - 2011 的限量要求。

X: Indicates that said hazardous substance contained in at least one of the homogeneous materials used for this part is above the limit requirement of GB / T26572 - 2011.
表示用于本部件的至少一种均质材料中所含的危害物质超过GB / T26572 - 2011 的限制要求。

For European Community Users

Cognex complies with Directive 2012/19/EU OF THE EUROPEAN PARLIAMENT AND OF THE COUNCIL of 4 July 2012 on waste electrical and electronic equipment (WEEE).

This product has required the extraction and use of natural resources for its production. It may contain hazardous substances that could impact health and the environment, if not properly disposed.

In order to avoid the dissemination of those substances in our environment and to diminish the pressure on the natural resources, we encourage you to use the appropriate take-back systems for product disposal. Those systems will reuse or recycle most of the materials of the product you are disposing in a sound way.

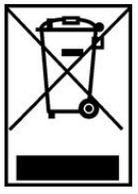
The crossed out wheeled bin symbol informs you that the product should not be disposed of along with municipal waste and invites you to use the appropriate separate take-back systems for product disposal.

If you need more information on the collection, reuse, and recycling systems, please contact your local or regional waste administration.

You may also contact your supplier for more information on the environmental performance of this product.

Copyright © 2026
Cognex Corporation. All Rights Reserved.