In-Sight® 3800 Line Scan
Quick Reference Guide



Precautions

To reduce the risk of injury or equipment damage, observe the following precautions when you install the Cognex product:

- The safety of any system incorporating this product is the responsibility of the assembler of the system.
- Do not install Cognex products where they are exposed to environmental hazards such as excessive heat, dust, moisture, humidity, impact, vibration, corrosive substances, flammable substances, or static electricity.
- Route cables and wires away from high-current wiring or high-voltage power sources to reduce the risk of damage or malfunction from the following causes: over-voltage, line noise, electrostatic discharge (ESD), power surges, or other irregularities in the power supply.
- Do not expose the image sensor to laser light. Image sensors can be damaged by direct, or reflected, laser light. If your application requires laser light that might strike the image sensor, use a lens filter at the corresponding laser wavelength. For suggestions, contact your local integrator or application engineer.
- This product does not contain user-serviceable parts. Do not make electrical or mechanical modifications to product components. Unauthorized modifications can void your warranty.
- Changes or modifications not expressly approved by the party responsible for regulatory compliance could void the user's authority to operate the equipment.
- Include service loops with cable connections.

- Ensure that the cable bend radius begins at least six inches from the connector. Cable shielding can be degraded or cables can be damaged or wear out faster if a service loop or bend radius is tighter than 10X the cable diameter.
- This device should be used in accordance with the instructions in this manual.
- All specifications are for reference purposes only and can change without notice.

Symbols

The following symbols indicate safety precautions and supplemental information:



WARNING: This symbol indicates a hazard that could cause death, serious personal injury or electrical shock.



CAUTION: This symbol indicates a hazard that could result in property damage.



Note: This symbol indicates additional information about a subject.



Tip: This symbol indicates suggestions and shortcuts that might not otherwise be apparent.

In-Sight 3800 Line Scan Series Accessories

You can purchase the following components separately. For a list of options and accessories, contact your local Cognex sales representative.

Lenses

Accessory	Product Number	Illustration
6 mm Moritex SR series lens	ML-U0618SR-18C	
12 mm Moritex SR series lens	ML-U1217SR-18C	
16 mm Moritex SR series lens	ML-U1615SR-18C	
25 mm Moritex SR series lens	ML-U2515SR-18C	
35 mm Moritex SR series lens	ML-U3518SR-18C	
50 mm Moritex SR series lens	ML-U5022SR-18C	

Note: Moritex lenses previously had the prefix LMC in the product number (for example ML-M0625UR was previously named LMC-ML-M0625UR). If you purchased a Moritex lens under the previous product number, you can still refer to this compatibility table using the product number without the LMC prefix.

Lens Covers

Accessory	Product Number	Illustration
15 mm Plastic Lens Cover	COV-380-CMNT-15	
45 mm Plastic Lens Cover	COV-380-CMNT-45	
60 mm Plastic Lens Cover	COV-380-CMNT-60	
75 mm Plastic Lens Cover	COV-380-CMNT-75	
30 mm Lens Cover Extender	COV-7000-CMNT-LGX	

Mounting Brackets

Accessory	Product Number	Illustration
Mounting bracket with M3, M4 and 1/4 - 20 mounting holes	BKT-INS-01	
Converter mounting bracket with M3 socket head screws/wrench	ISB-7000-7K	
Converter mounting bracket with Phillips flat head M3 screws and M4 screws	ISB-7000-5K	

Cables

Note: Cables are sold separately.

Accessory	Product Number	Illustration
Ethernet Cable, X-coded M12-8 to RJ-45	CCB-84901-2001-xx (straight, xx specifies length: 2m, 5m, 10m, 15m, 30m)	
Ethernet Cable, X-coded M12-8 to RJ-45	CCB-84901-2RBT-xx (straight, xx specifies length: 2m, 5m, 10m)	
Breakout Cable, M12-12 to Flying Lead	CCB-PWRIO- xx (straight, xx specifies length: 5m, 10m, 15m)	

Setting Up Your In-Sight Vision System

Read this section to learn how the vision system connects to its standard components and accessories.

Note:

- Cables are sold separately.
- If a standard component is missing or damaged, immediately contact your Cognex Authorized Service Provider (ASP) or Cognex Technical Support.

CAUTION: All cable connectors are keyed to fit the connectors on the vision system. Do not force the connections or damage may occur.

Vision System Layout

The image and table below shows the elements of the vision system.

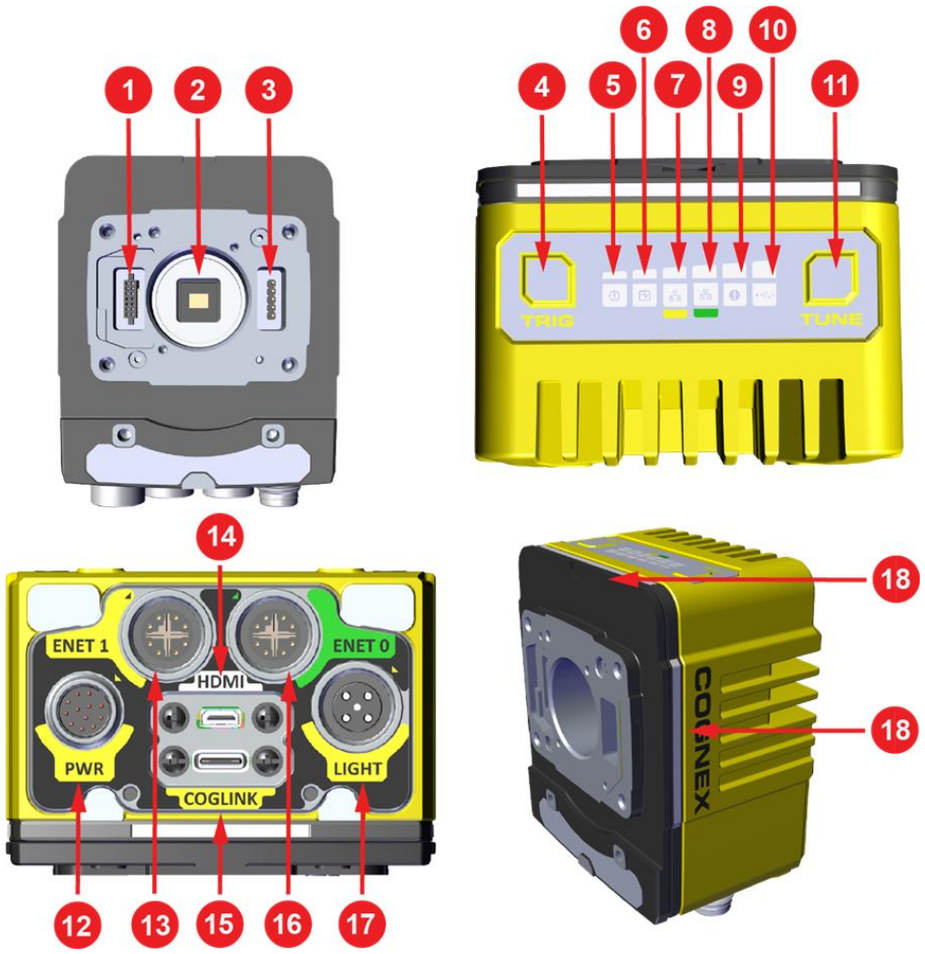

Number	Description
1	Integrated Illumination connector **Note**: Not supported for 3800 In-Sight Line Scan vision systems.
2	Imager/C-mount flange
3	Lens connector **Note**: Not supported for 3800 In-Sight Line Scan vision systems.

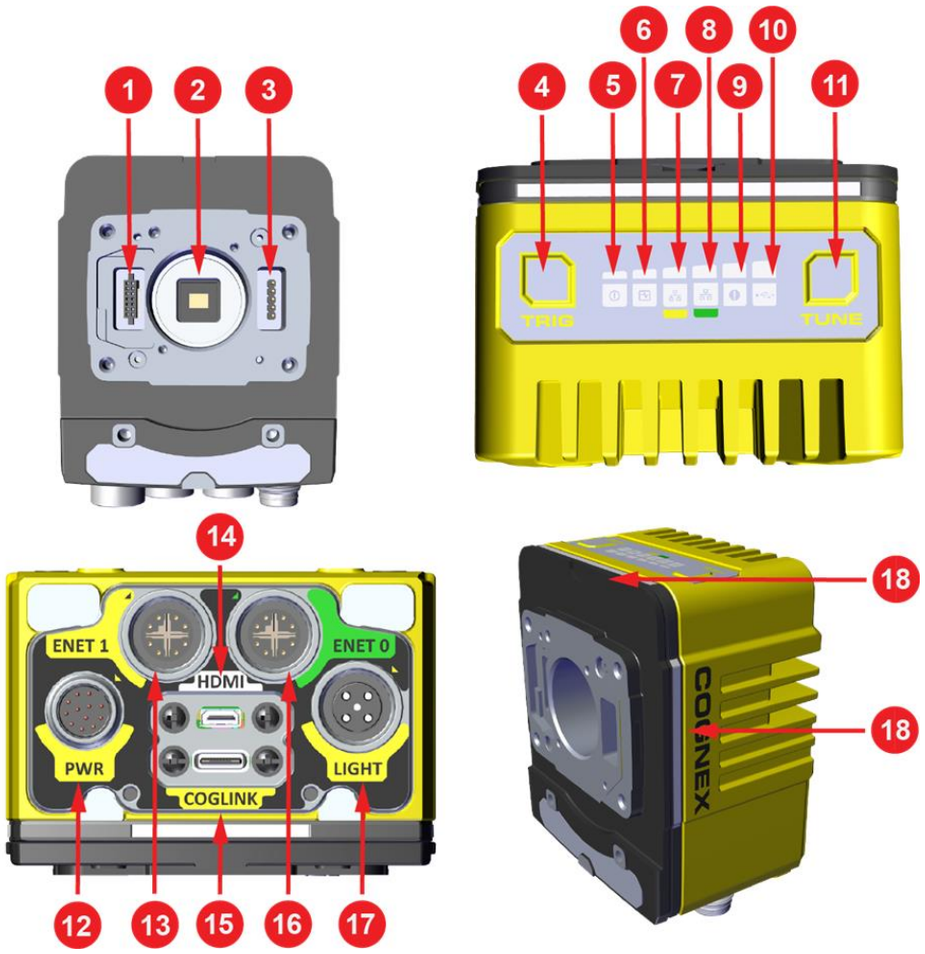

4	Trigger button
5	Power LED indicator
6	Train status LED indicator
7	Ethernet 1 status LED
8	Ethernet 0 status LED
9	Error LED indicator
10	Coglink/USB-C status LED

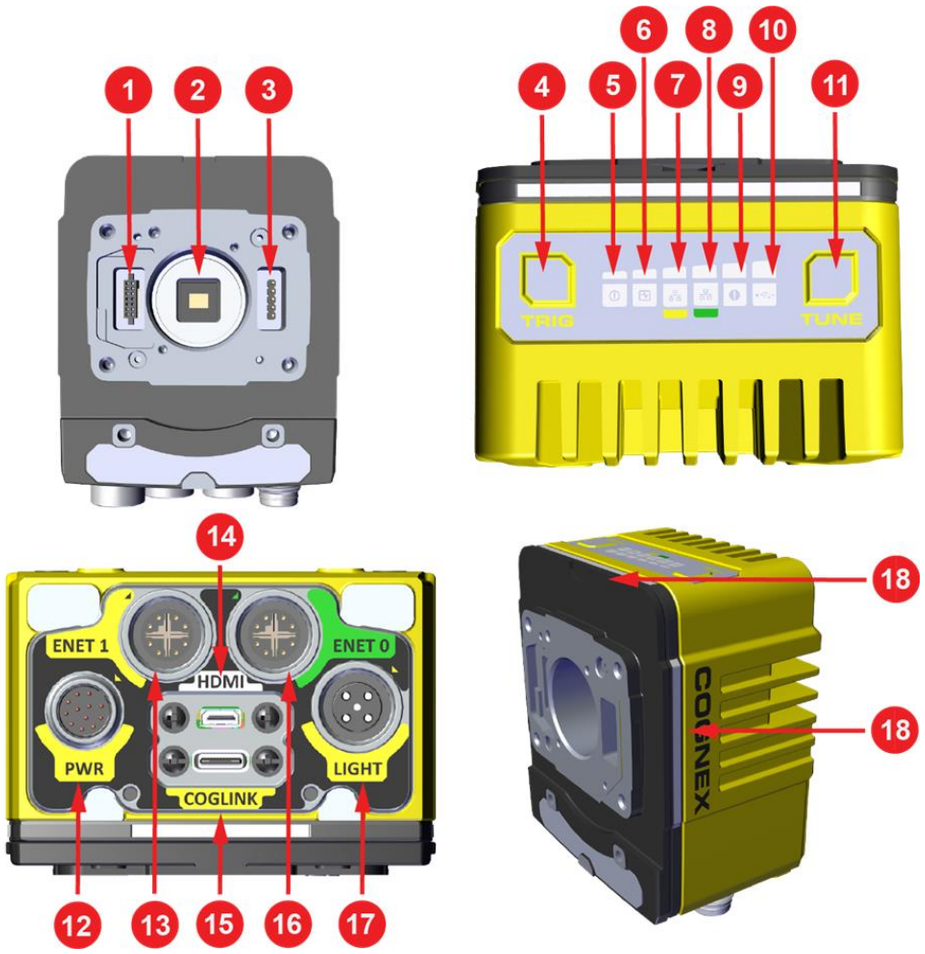

11	Tune button
12	Power I/O Breakout cable connector
13	Ethernet connector 1
14	Micro-HDMI connector
15	Coglink/USB-C connector
16	Ethernet connector 0

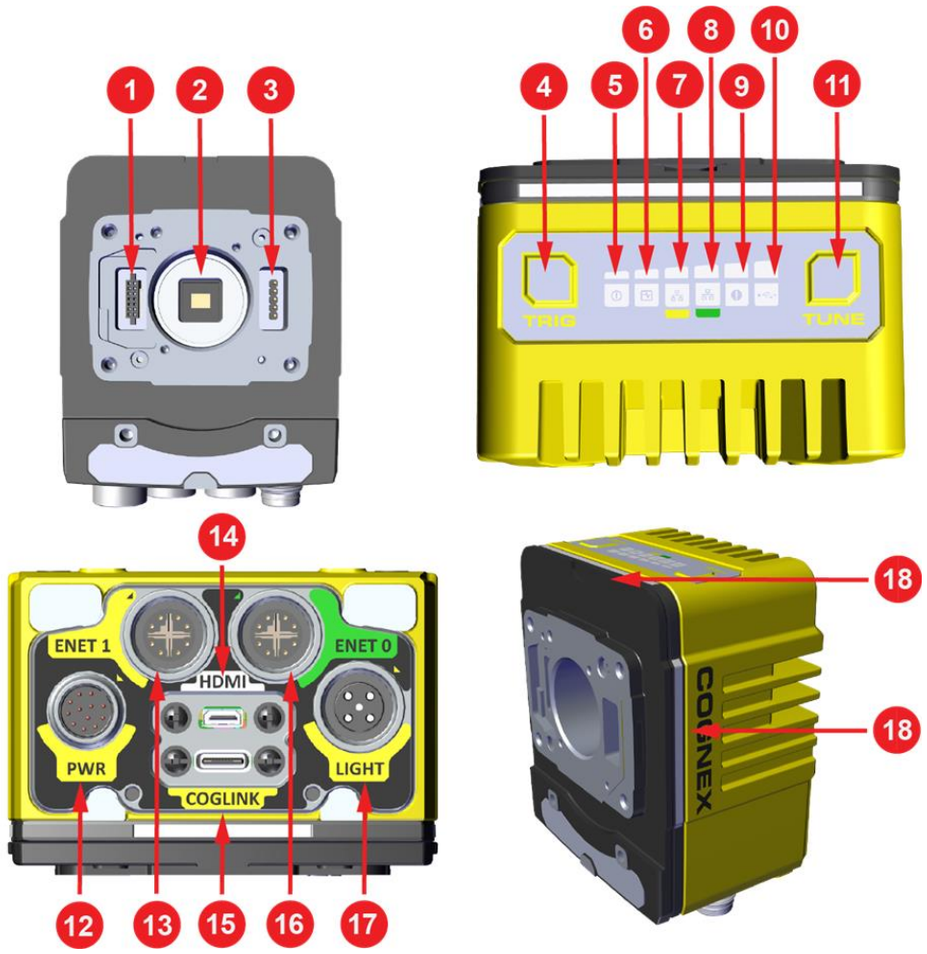

17	Light connector **Note**: Not supported for 3800 In-Sight Line Scan vision systems.
18	Ring LED indicator

Dimensions

The following sections list dimensions of the vision system.

Note:

- Dimensions are in millimeters and are for reference purposes only.
- All specifications are for reference purposes only and can change without notice.

In-Sight 3800 with 45 mm Lens Cover

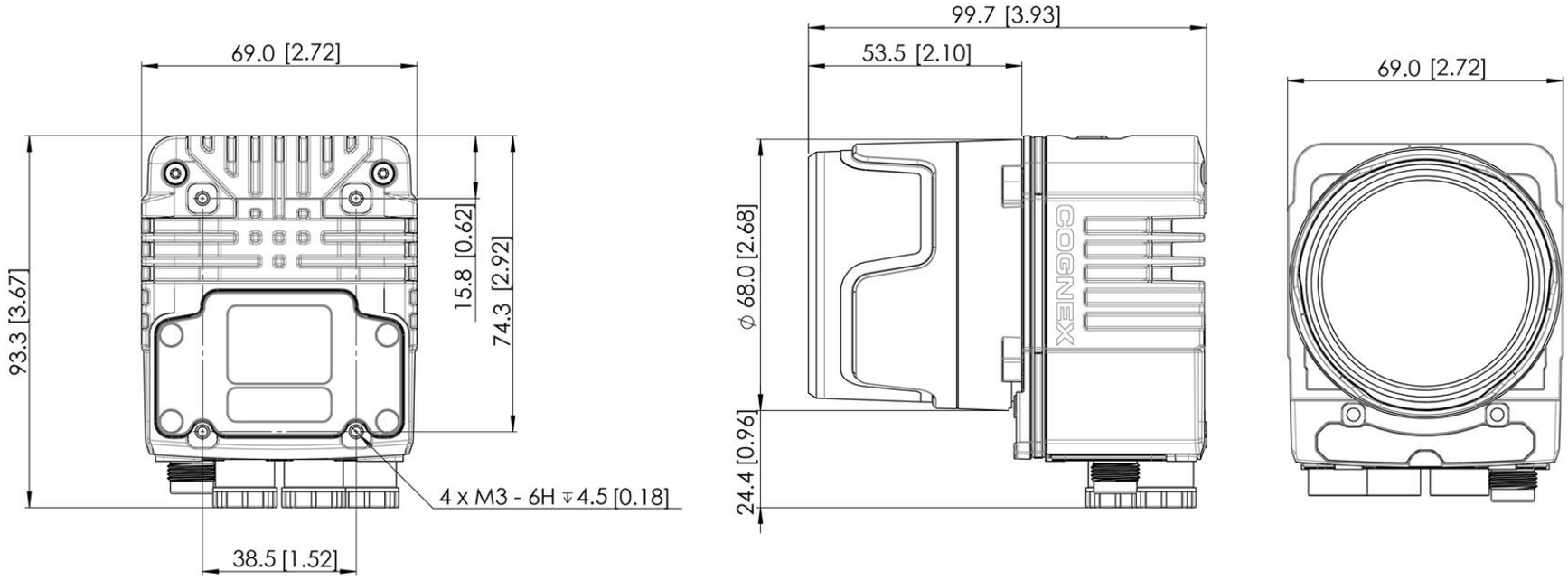

In-Sight 3800 with 60 mm Lens Cover

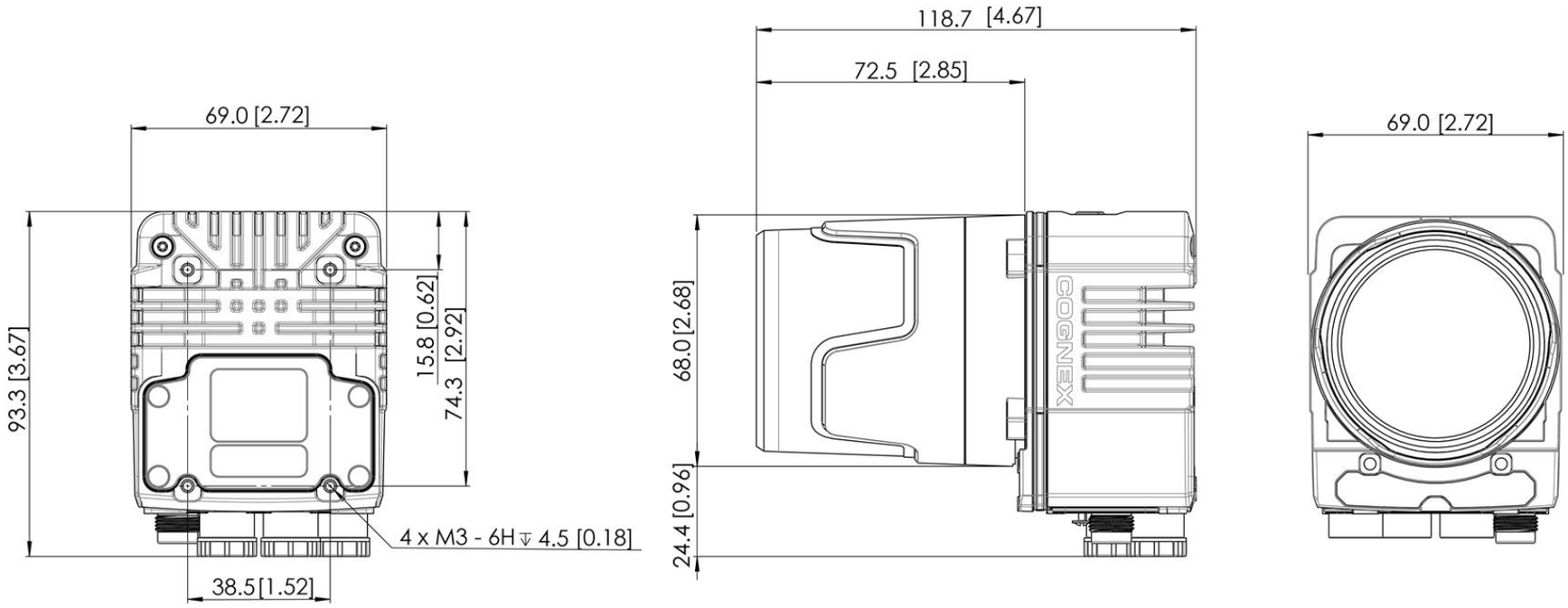

In-Sight 3800 with 75 mm Lens Cover

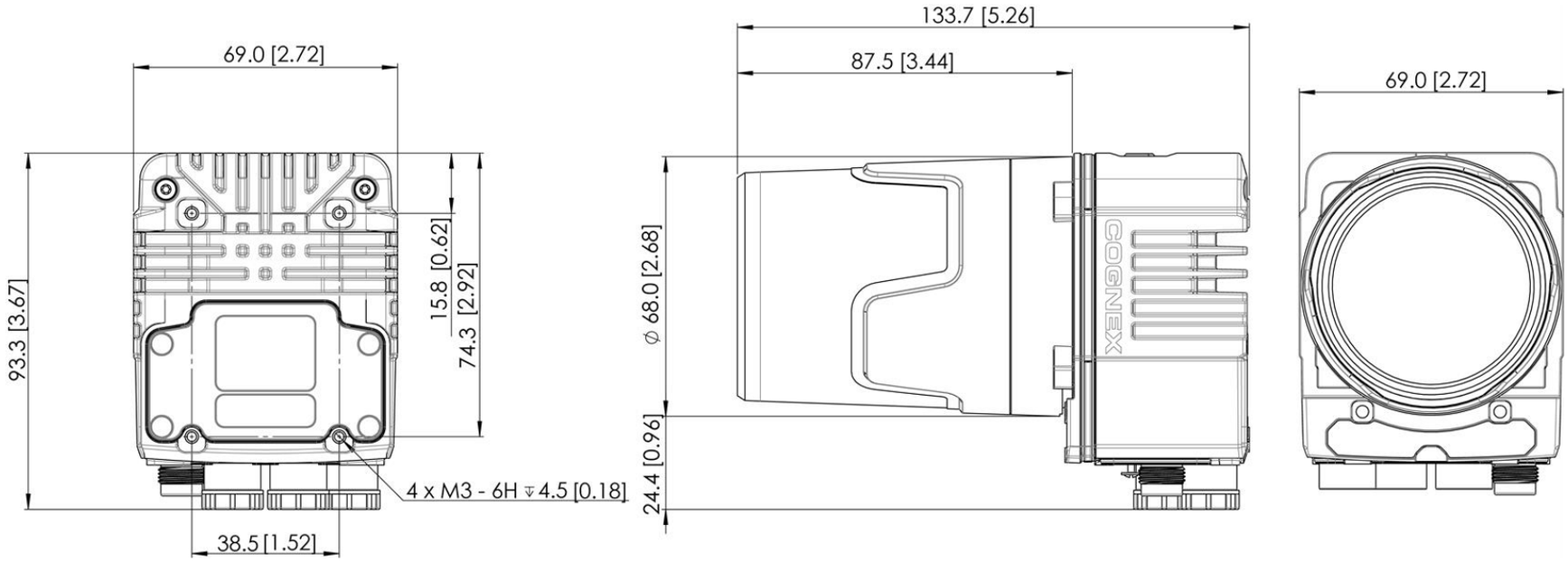

In-Sight 3800 - Smart Camera Only

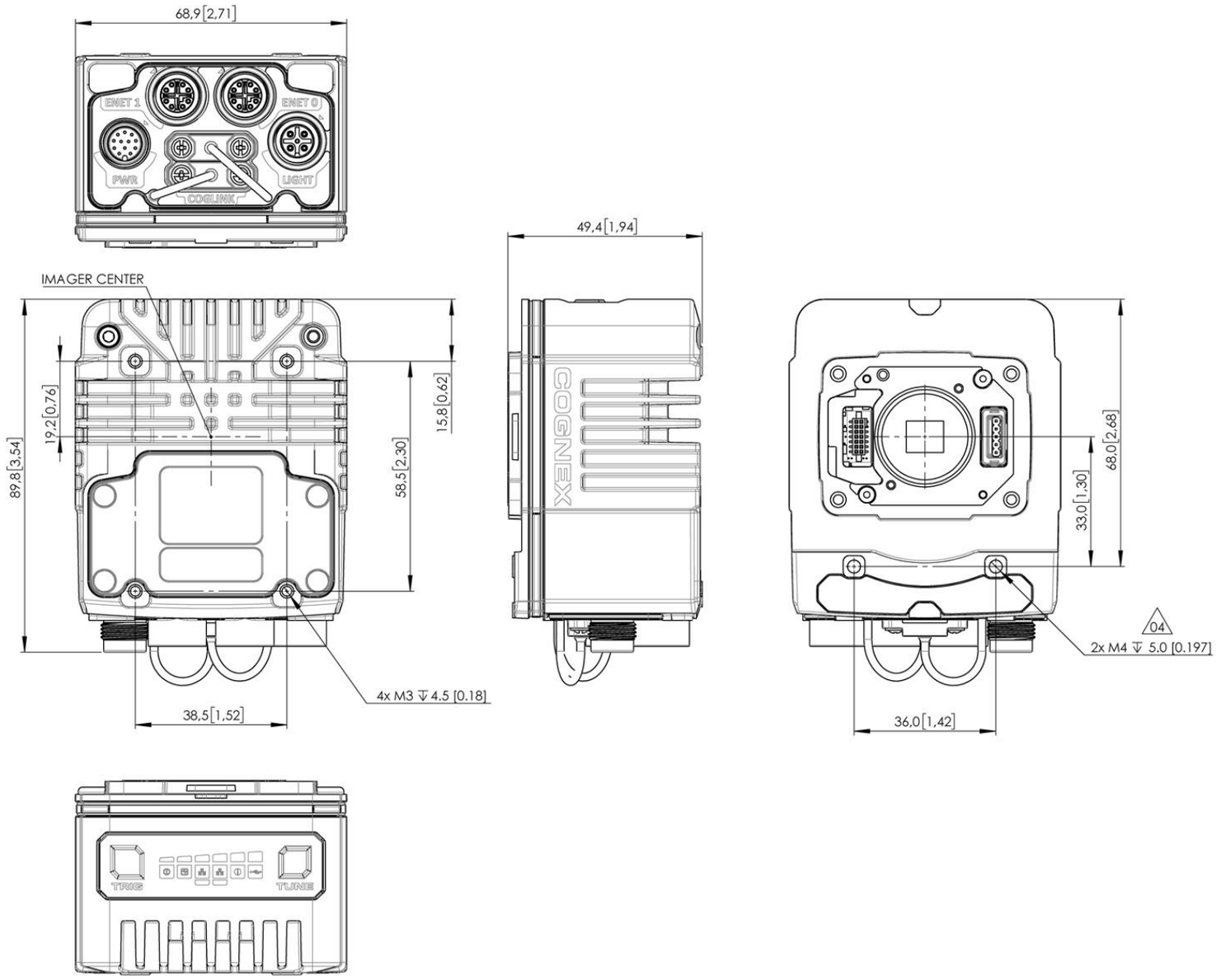

Mounting the Vision System

The vision system provides mounting holes for attachment to a mounting surface.

CAUTION: The vision system has to be grounded, either by mounting the vision system to a fixture that is electrically grounded or by attaching a wire from the mounting fixture of the vision system to frame ground or Earth ground. If a ground wire is used, it has to be attached to one of the mounting points on the bottom plate of the vision system and not to the mounting points on the front of the vision system.

Mounting Bracket (BKT-INS-01)

1. Align the mounting bracket with the mounting holes on the vision system. If using the M3 mounting holes, you can attach the mounting bracket in either orientation.
2. Insert the M3 screws into the mounting holes and tighten. The maximum torque is 0.90 Nm (8 in-lb).

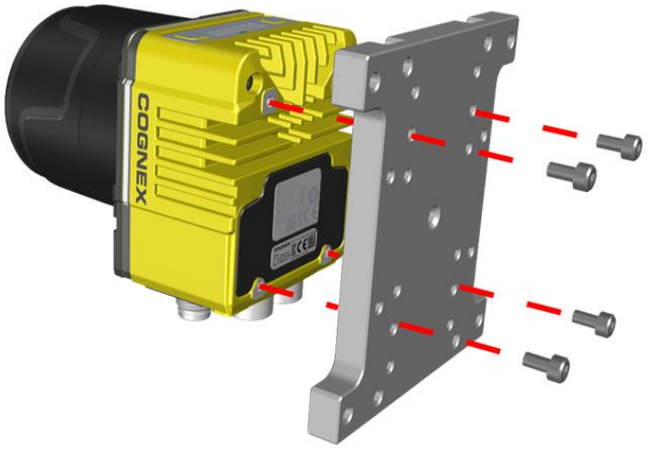

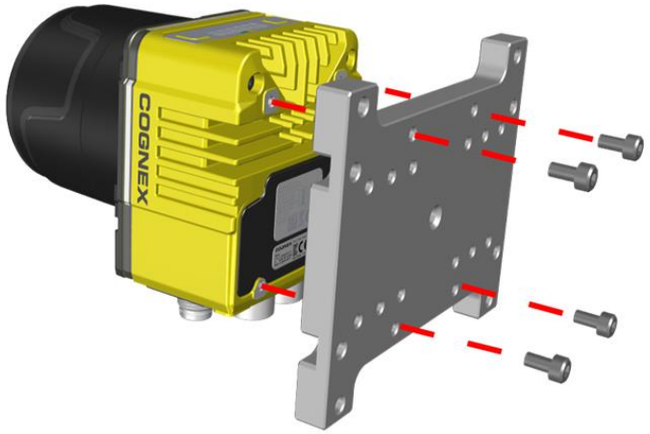

Converter Mounting Bracket (ISB-7000-7K)

1. Align the converter mounting bracket with the mounting holes on the vision system.
2. Insert the M3 screws into the mounting holes and use a 2.5 mm hex wrench to tighten. The maximum torque is 0.90 Nm (8 in-lb).

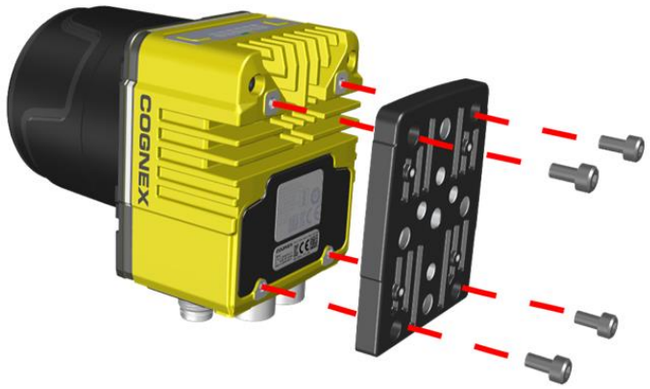

Converter Mounting Bracket (ISB-7000-5K)

1. Align the converter mounting bracket with the mounting holes on the vision system.
2. Insert the Phillips flat head screws into the mounting holes and tighten. The maximum torque is 0.56 Nm (5 in-lb).

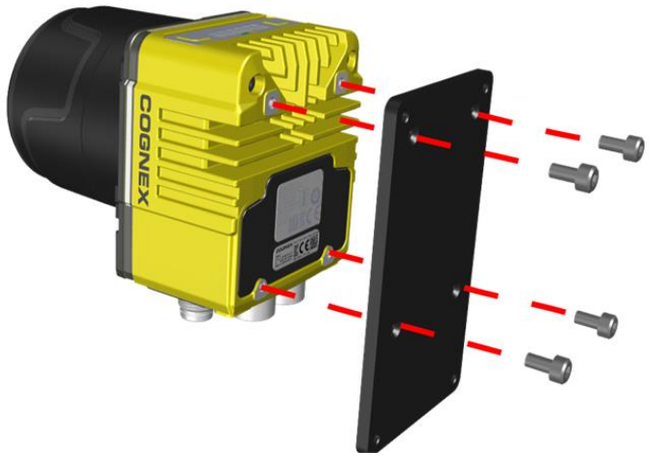

Connection Options

This section summarizes connection options.

Connecting the Ethernet Cable



CAUTION: The Ethernet cable shield has to be grounded at the far end. If the far end device is not grounded, add a ground wire in compliance with local electrical codes. The cable is typically plugged into a switch or router, which has to have a grounded Ethernet connector. Use a digital voltmeter to validate the grounding.

---

1. Connect the M12 connector of the Ethernet cable to the green ENET0 connector of the vision system.
2. Connect the RJ-45 connector of the Ethernet cable to a switch, router, or PC.

Connecting the Power and I/O Breakout Cable

CAUTION: To reduce emissions, connect the far end of the Breakout cable shield to frame ground.

Note:

- Perform wiring or adjustments to I/O devices when the vision system is not receiving power.
- You can clip unused wires short or use a tie made of non-conductive material to tie them back. Keep bare wires separated from the +24 V DC wire.

1. Verify that the 24 V DC power supply is unplugged and not receiving power.
2. Attach the +24 V DC connector of the Power and I/O Breakout cable and Ground wires to the corresponding terminals on the power supply. For more information, see *Specifications* on page 22.
3. Attach the M12 connector of the Power and I/O Breakout Cable to the 24 V DC connector of the vision system.
4. Restore power to the 24 V DC power supply and turn it on if necessary.

Specifications

The following sections list general specifications for the vision system.

In-Sight 3800 Line Scan Vision System

Specification	In-Sight 3800
Lens Type	C-Mount only
Trigger	1 opto-isolated, acquisition trigger input.
Discrete Inputs	1 opto-isolated, acquisition trigger input. 2 encoder line inputs for quadrature support. 1 general-purpose input.
Discrete Outputs	Up to 2 high-speed outputs when connected to the Breakout cable.
Encoder Specifications	12 - 30 VDC (500 kHz max)
Status LEDs	Pass/Fail LED and Indicator Ring, Network LED, and Error LED.
Memory	4 GB
Job / Program Storage	7.2 GB non-volatile flash memory, unlimited storage using remote network device.
Image Processing Memory	Dynamic allocation shared with Job / Program Storage
Network Communication	2 Ethernet ports, 10/100/1000 BaseT with auto MDIX. IEEE 802.3 TCP/IP Protocol. Supports DHCP, static, and link-local IP address configuration.
Communication Protocols	TCP/IP, PROFINET, EtherNet/IP, SLMP, ModbusTCP, (S)FTP, RS-232C, IEEE 1588 (CIPSync)

Specification	In-Sight 3800
IEEE 1588 Support	Timestamp resolution: 8 ns; Synchronization accuracy through transparent clock: 5 ns
Power Consumption	24 V DC ± 10%, 2.0 A maximum.
Power Output	24 V DC at 1.0 A maximum to external light.
Material	Die-cast and extruded aluminum and zinc housing.
Finish	Painted.
Mounting	Four M3 threaded mounting holes. See *Mounting Brackets* on page 7 for supported mounts. Pattern: 38.5 × 58.5 mm (1.52 × 2.60 in)
Weight	In-Sight 3800 with no accessories attached: 570 g (20.10 oz). • with 45 mm plastic C-Mount cover (COV-380-CMNT-45): 625 g (22.0 oz.) - no lens included. • with 60 mm plastic C-Mount cover (COV-380-CMNT-60): 635 g (22.4 oz.) - no lens included. • with 75 mm plastic C-Mount cover (COV-380-CMNT-75): 650 g (22.9 oz.) - no lens included.
Case Temperature	0° C to 40° C (32° F to 104° F)
Storage Temperature	-20° C to 80° C (-4° F to 176° F)
Humidity	< 95% non-condensing
Protection	IP67 with all cables properly attached (or the provided connector plug installed) and the IP67-rated cover properly installed.
Shock (Shipping and Storage)	IEC 60068-2-27 - 500 shocks in each polarity of each (X, Y, and Z) axis, 3000 shocks total, semi-sinusoidal, 11 g, 10 ms

Specification	In-Sight 3800
Vibration (Shipping and Storage)	IEC 60068-2-6: vibration test in each of the three main axis for 2 hours at 10 Gs (10 to 500 Hz at 100 m/s^2 / 15 mm) with cables or cable plugs and a 150 gram or lighter lens attached.
Regulations/Conformity	CE, FCC, KCC, TÜV SÜD NRTL, EU RoHS, China RoHS

In-Sight 3800 Line Scan Vision System Image Sensor

Specification	1K Mode	2K Mode	4K Mode
Bit Depth	8-bit monochrome	8-bit monochrome	8-bit monochrome
Line Rate (Maximum, Full Resolution)	87 kHz (11.5 µs per line)	169 kHz (5.9 µs per line)	84 kHz (11.9 µs per line)
Sensor Type	1" CMOS	1" CMOS	1" CMOS
Image Sensor Properties	14 µm x 14 µm square pixels	7 µm x 7 µm square pixels	3.45 x 3.45 µm square pixels
Maximum Image Resolution (pixels)	1024 x 16384 (16 MP)	2048 x 16384 (32 MP)	4096 x 16384 (64MP)
Electronic Shutter Speed	0.1 µs to 1,000,000 µs	0.1 µs to 1,000,000 µs	0.1 µs to 1,000,000 µs

Regulations and Conformity

Note: For the most current CE and UKCA declaration and regulatory conformity information, see the Cognex support site: cognex.com/support.

In-Sight 3800 vision systems have the Regulatory Model number 50103 and meet or exceed the requirements of all applicable standards organizations for safe operation. However, as with any electrical equipment, the best way to ensure safe operation is to operate them according to the agency guidelines that follow. Please read these guidelines carefully before using your device.

Safety and Regulatory	
Manufacturer	Cognex Corporation One Vision Drive Natick, MA 01760 USA
CE	In-Sight 3800 1.6 MP, 3 MP, 5 MP: Regulatory Model 50103 This is a class A product. In a domestic environment this product may cause radio interference in which case the user may be required to take immediate measures. This equipment complies with the essential requirements of the EU Directive 2014/30/EU. Declarations are available from your local representative.
EU RoHS	Compliant to the most recent applicable directive.
FCC	FCC Part 15, Class A This equipment has been tested and found to comply with the limits for a Class A digital device, pursuant to part 15 of the FCC Rules. These limits are designed to provide reasonable protection against harmful interference when the equipment is operated in a commercial environment. This equipment generates, uses, and can radiate radio frequency energy and, if not installed and used in accordance with the instruction manual, may cause harmful interference to radio communications. Operation of this equipment in a residential area is likely to cause harmful interference in which case the user will be required to correct the interference at his own expense.

Safety and Regulatory	
Korea 	This device is certified for office use only and if used at home, there can be frequency interference problems. A급 기기(업무용 방송통신기자재): 이 기기는 업무용(A급) 전자파적합기기로서 판매자 또는 사용자는 이 점을 주의하시기 바라며, 가정외의 지역에서 사용하는 것을 목적으로 합니다. In-Sight 3800 1.6 MP, 3 MP, 5 MP: Regulatory Model 50103
TÜV	In-Sight 3800 1.6 MP, 3 MP, 5 MP: Regulatory Model 50103
	NRTL: TÜV SÜD SCC/NRTL OSHA Scheme for UL/CAN 61010-1.
	CB report available upon request. TÜV SÜD, IEC/EN 61010-1.
UK CA	In-Sight 3800 1.6 MP, 3 MP, 5 MP: Regulatory Model 50103 This is a class A product. In a domestic environment this product may cause radio interference in which case the user may be required to take immediate measures. This equipment complies with the essential requirements of the Electromagnetic Compatibility Regulations 2016. Declarations are available from your local representative.

中国大陆RoHS (Information for China RoHS Compliance)

根据中国大陆《电子信息产品污染控制管理办法》(也称为中国大陆RoHS)，以下部份列出了本产品中可能包含的有毒有害物质或元素的名称和含量。



	Hazardous Substances 有害物质					
Part Name 部件名称	Lead (Pb) 铅	Mercury (Hg) 汞	Cadmium (Cd) 镉	Hexavalent Chromium (Cr (VI)) 六价铬	Polybrominated biphenyls (PBB) 多溴联苯	Polybrominated diphenyl ethers (PBDE) 多溴二苯醚
Regulatory Model 50103	X	O	O	O	O	O

This table is prepared in accordance with the provisions of SJ/T 11364.
这个标签是根据SJ / T 11364 的规定准备的。

O: Indicates that said hazardous substance contained in all of the homogeneous materials for this part is below the limit requirement of GB / T26572 - 2011.
表示本部件所有均质材料中含有的有害物质低于GB / T26572 - 2011 的限量要求。

X: Indicates that said hazardous substance contained in at least one of the homogeneous materials used for this part is above the limit requirement of GB / T26572 - 2011.
表示用于本部件的至少一种均质材料中所含的危害物质超过GB / T26572 - 2011 的限制要求。

For European Community Users

Cognex complies with Directive 2012/19/EU OF THE EUROPEAN PARLIAMENT AND OF THE COUNCIL of 4 July 2012 on waste electrical and electronic equipment (WEEE).

This product has required the extraction and use of natural resources for its production. It may contain hazardous substances that could impact health and the environment, if not properly disposed.

In order to avoid the dissemination of those substances in our environment and to diminish the pressure on the natural resources, we encourage you to use the appropriate take-back systems for product disposal. Those systems will reuse or recycle most of the materials of the product you are disposing in a sound way.

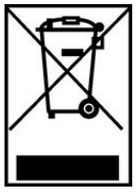
The crossed out wheeled bin symbol informs you that the product should not be disposed of along with municipal waste and invites you to use the appropriate separate take-back systems for product disposal.

If you need more information on the collection, reuse, and recycling systems, please contact your local or regional waste administration.

You may also contact your supplier for more information on the environmental performance of this product.

Copyright © 2026
Cognex Corporation. All Rights Reserved.