In-Sight® 3800 Series
Quick Reference Guide



Precautions

To reduce the risk of injury or equipment damage, observe the following precautions when you install the Cognex product:

- The safety of any system incorporating this product is the responsibility of the assembler of the system.
- Do not install Cognex products where they are exposed to environmental hazards such as excessive heat, dust, moisture, humidity, impact, vibration, corrosive substances, flammable substances, or static electricity.
- Route cables and wires away from high-current wiring or high-voltage power sources to reduce the risk of damage or malfunction from the following causes: over-voltage, line noise, electrostatic discharge (ESD), power surges, or other irregularities in the power supply.
- Do not expose the image sensor to laser light. Image sensors can be damaged by direct, or reflected, laser light. If your application requires laser light that might strike the image sensor, use a lens filter at the corresponding laser wavelength. For suggestions, contact your local integrator or application engineer.
- This product does not contain user-serviceable parts. Do not make electrical or mechanical modifications to product components. Unauthorized modifications can void your warranty.
- Changes or modifications not expressly approved by the party responsible for regulatory compliance could void the user's authority to operate the equipment.
- Include service loops with cable connections.

- Ensure that the cable bend radius begins at least six inches from the connector. Cable shielding can be degraded or cables can be damaged or wear out faster if a service loop or bend radius is tighter than 10X the cable diameter.
- This device should be used in accordance with the instructions in this manual.
- All specifications are for reference purposes only and can change without notice.

Symbols

The following symbols indicate safety precautions and supplemental information:



WARNING: This symbol indicates a hazard that could cause death, serious personal injury or electrical shock.



CAUTION: This symbol indicates a hazard that could result in property damage.



Note: This symbol indicates additional information about a subject.



Tip: This symbol indicates suggestions and shortcuts that might not otherwise be apparent.

In-Sight 3800 Series Accessories

You can purchase the following components separately. For a list of options and accessories, contact your local Cognex sales representative.

Lenses

Accessory	Product Number	Illustration	IS3801	IS3803	IS3805	IS3808	IS3812	IS3816
8 mm High Speed Liquid Lens - Visible and Near-IR Light **Note**: Compatible with IS3801 if using Multi Torch. Compatible with IS3801/3803 if using C-mount cover.	CLN-C08F8FS-HSLL		✓ [1]	✓ [2]				

[1] When using a C-mount cover, use a 45 mm cover length or shorter to avoid cropping the image.

[2] When using a C-mount cover, use a 15 mm cover length or shorter to avoid cropping the image.

Accessory	Product Number	Illustration	IS3801	IS3803	IS3805	IS3808	IS3812	IS3816
10 mm High Speed Liquid Lens - Visible and Near-IR Light **Note**: Compatible with IS3801/3803 if using Multi Torch. Compatible with IS3801/3803/3805 if using C-mount cover.	CLN-C10F5FS-HSLL		✓	✓ [1]	✓ [2]			
16 mm High Speed Liquid Lens - Visible and Near-IR Light	CLN-C16F8FS-HSLL		✓	✓	✓			
24 mm High Speed Liquid Lens - Visible and Near-IR Light	CLN-C24F6FS-HSLL		✓	✓	✓			
35 mm High Speed Liquid Lens - Visible and Near IR Light	CLN-C35F8FS-HSLL		✓	✓	✓			

Accessory	Product Number	Illustration	IS3801	IS3803	IS3805	IS3808	IS3812	IS3816
16 mm Manual Focus lens for Multi Torch - Visible and Near IR Light	CLN-C16F8FS		✓	✓	✓			
24 mm Manual Focus lens for Multi Torch - Visible and Near-IR Light	CLN-C24F6FS		✓	✓	✓			
8 mm Moritex HR series lens	ML-M0818HR		✓					
12 mm Moritex HR series lens	ML-M1218HR		✓					
16 mm Moritex HR series lens	ML-M1618HR		✓					
25 mm Moritex HR series lens	ML-M2518HR		✓					
35 mm Moritex HR series lens	ML-M3520HR		✓					
50 mm Moritex HR series lens	ML-M5025HR		✓					

Accessory	Product Number	Illustration	IS3801	IS3803	IS3805	IS3808	IS3812	IS3816
6 mm Moritex UR series lens	ML-M0625UR		✓	✓	✓			
8 mm Moritex UR series lens	ML-M0822UR		✓	✓	✓			
12 mm Moritex UR series lens	ML-M1218UR		✓	✓	✓			
16 mm Moritex UR series lens	ML-M1616UR		✓	✓	✓			
25 mm Moritex UR series lens	ML-M2516UR		✓	✓	✓			
35 mm Moritex UR series lens	ML-M3520UR		✓	✓	✓			
50 mm Moritex UR series lens	ML-M5025UR		✓	✓	✓			
16 mm HSLL - high resolution	CLN-C16F65-HSLL-HR					✓	✓	

Accessory	Product Number	Illustration	IS3801	IS3803	IS3805	IS3808	IS3812	IS3816
25 mm HSLL - high resolution	CLN-C25F65-HSLL-HR					✓	✓	
35 mm HSLL - high resolution	CLN-C35F06-HSLL-HR					✓	✓	

Accessory	Product Number	Illustration	IS3801	IS3803	IS3805	IS3808	IS3812	IS3816
6 mm Moritex SR series lens	ML-U0618SR-18C					✓	✓	✓
12 mm Moritex SR series lens	ML-U1217SR-18C					✓	✓	✓
16 mm Moritex SR series lens	ML-U1615SR-18C					✓	✓	✓
25 mm Moritex SR series lens	ML-U2515SR-18C					✓	✓	✓
35 mm Moritex SR series lens	ML-U3518SR-18C					✓	✓	✓
50 mm Moritex SR series lens	ML-U5022SR-18C					✓	✓	✓

Accessory	Product Number	Illustration	IS3801	IS3803	IS3805	IS3808	IS3812	IS3816
Blue bandpass filter for Multi Torch	380-TORCH-BP450		✓	✓	✓			
Red bandpass filter for Multi Torch	380-TORCH-BP635	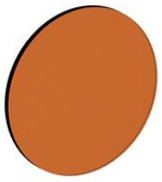	✓	✓	✓			

Note: Moritex lenses previously had the prefix LMC in the product number (for example ML-M0625UR was previously named LMC-ML-M0625UR). If you purchased a Moritex lens under the previous product number, you can still refer to this compatibility table using the product number without the LMC prefix.

Lens Covers

Accessory	Product Number	Illustration
15 mm Plastic Lens Cover	COV-380-CMNT-15	
45 mm Plastic Lens Cover	COV-380-CMNT-45	
60 mm Plastic Lens Cover	COV-380-CMNT-60	
75 mm Plastic Lens Cover	COV-380-CMNT-75	
30 mm Lens Cover Extender	COV-7000-CMNT-LGX	
Multi Torch front cover - Diffused	380-TORCH-COVDIF	

Accessory	Product Number	Illustration
Multi Torch front cover - Cross-Polarized	380-TORCH-COVPOL	
Multi Torch front cover - Clear	380-TORCH-COVCLR	
ESD safe Multi Torch front cover	380-TORCH-COVCLESD	
Dome Attachment for 380 platform Multi Torch and DataMan HPIT	380-TORCH-DOME	
Covers for integrated light and autofocus lens connectors on faceplate	380-CON-PLUGS	

Integrated Lights

Accessory	Product Number	Illustration
Multi Torch Accessory Kit for autofocus lenses (RGBW-IR Light w/ ToF and Laser Aimer) Includes: Multi Torch Illumination module, mount for illumination module (High Speed Liquid Lenses only), Diffused cover, Illumination PCB, 2 mm hex tool Accessory Model 50231	380-TORCH-MULTI-AF	
Multi Torch Accessory Kit for manual focus lenses (RGBW-IR w/ ToF and Laser Aimer) Includes: Multi Torch Illumination module, mount for illumination module (manual focus lenses only), Diffused cover, Illumination PCB, 2 mm hex tool Accessory Model 50231	380-TORCH-MULTI-MF	
Red Torch-HR Accessory kit for high resolution IS3800 models Includes: Red Torch-HR illumination module, diffused cover, illumination cable, 2 mm hex tool	380-TORCH-RED-HR	
White Torch-HR Accessory kit for high resolution IS3800 models Includes: White Torch-HR illumination module, diffused cover, illumination cable, 2 mm hex tool	380-TORCH-WHITE-HR	

WARNING: Multi Torch and Torch-HR devices equipped with a Time-of-Flight sensor, the device has been tested to be under the limits of a Class 1 Laser device.



CAUTION: Multi Torch and Torch-HR devices equipped with a target aimer have been tested in accordance with IEC 60825-1. 3rd ed. 2014, and have been certified to be under the limits of a Class 2 Laser device.

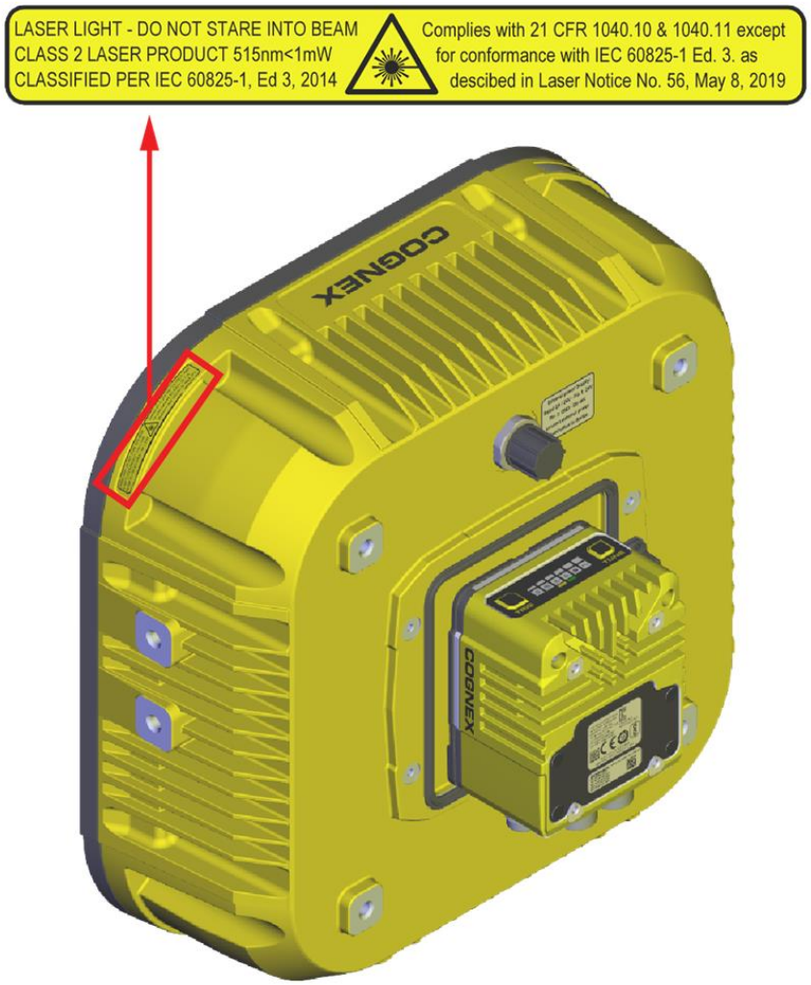

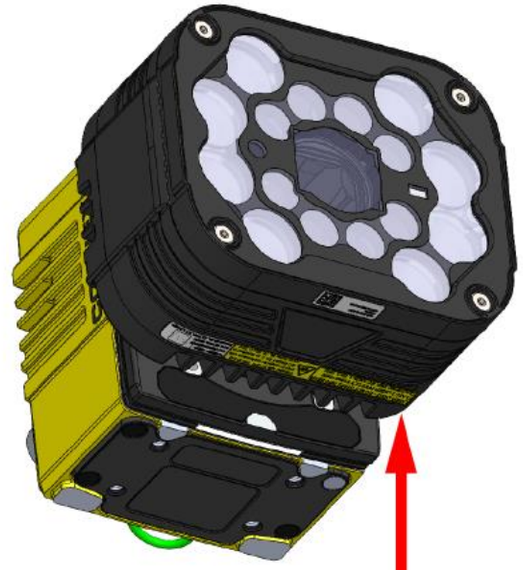

LASER LIGHT - DO NOT STARE INTO BEAM
CLASS 2 LASER PRODUCT 515nm<1mW
CLASSIFIED PER IEC 60825-1, Ed 3, 2014

Complies with 21 CFR 1040.10 and 1040.11 except for conformance with IEC 60825-1 Ed. 3. as described in Laser Notice No. 56, May 8, 2019

Cables

Note: Cables are sold separately.

Accessory	Product Number	Illustration
External Light Cable, Yellow **Note**: This cable supports intensity control.	IVSL-5PM12-J300 IVSL-5PM12-J500 IVSL-5PM12-J1000 IVSL-5PM12-J2000	
External Light Cable, Black **Note**: This cable supports intensity control and is used with standard SVL lights.	IVSL-M12-NSB-300 IVSL-M12-NSB-1000 IVSL-M12-NSB-2000	
External Light Cable, Grey **Note**: This cable does not support intensity control.	CCB-M12LTF-xx (xx specifies length: 0.5m, 1m, 2m, 5m)	
Black M12 to M12 cable with a small in-line capacitor (2 m)	ICQ-CB-0.5-IFL-M12	
Ethernet Cable, X-coded M12-8 to RJ-45	CCB-84901-2001-xx (straight, xx specifies length: 2m, 5m, 10m, 15m, 30m)	
Ethernet Cable, X-coded M12-8 to RJ-45	CCB-84901-2RBT-xx (straight, xx specifies length: 2m, 5m, 10m)	

Accessory	Product Number	Illustration
Breakout Cable, M12-12 to Flying Lead	CCB-PWRIO- xx (straight, xx specifies length: 5m, 10m, 15m)	

Mounting Brackets

Accessory	Product Number	Illustration
U-shaped mounting bracket for IS3800 with Torch-HR, M6 mounting holes	DMBK-PVT-HPIT-380	
Mounting bracket with M3, M4 and 1/4 - 20 mounting holes	BKT-INS-01	
Converter mounting bracket with M3 socket head screws/wrench	ISB-7000-7K	
Converter mounting bracket with Phillips flat head M3 screws and M4 screws	ISB-7000-5K	

Setting Up Your In-Sight Vision System

Read this section to learn how the vision system connects to its standard components and accessories.

Note:

- Cables are sold separately.
- If a standard component is missing or damaged, immediately contact your Cognex Authorized Service Provider (ASP) or Cognex Technical Support.

CAUTION: All cable connectors are keyed to fit the connectors on the vision system. Do not force the connections or damage may occur.

Vision System Layout

The image and table below shows the elements of the vision system.

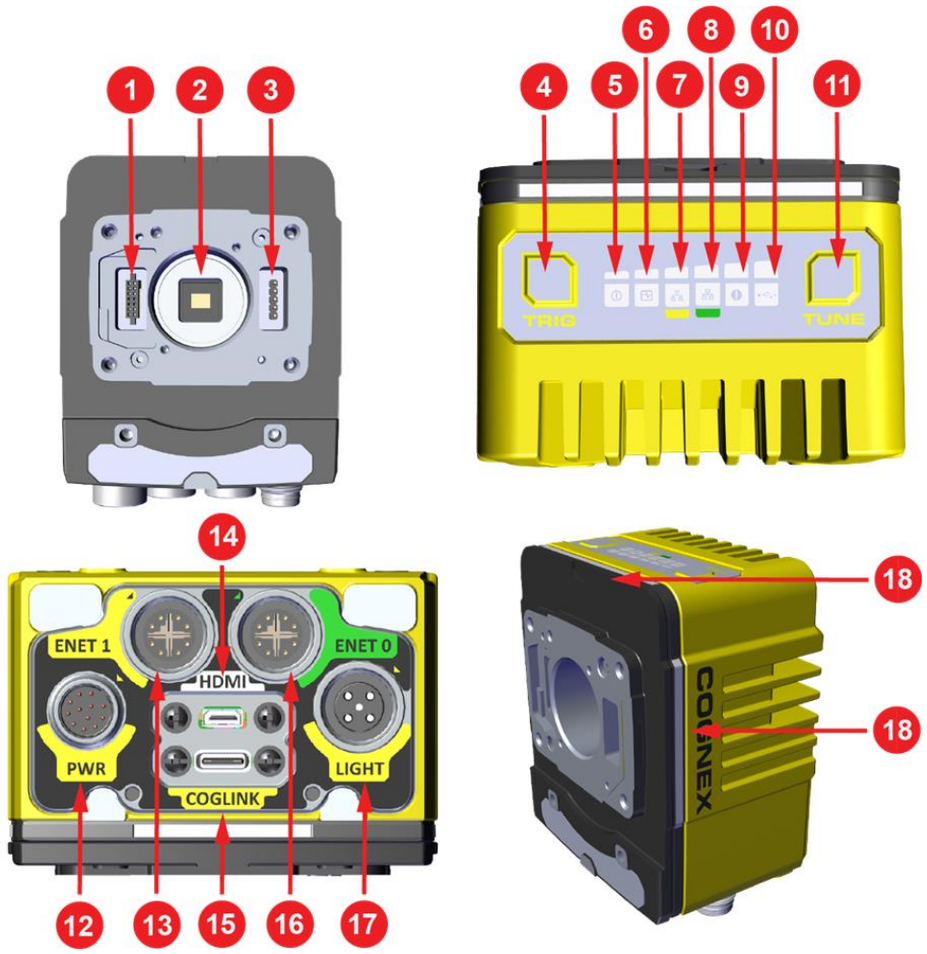

Number	Description
1	Integrated Illumination connector
2	Imager/C-mount flange
3	Lens connector
4	Trigger button
5	Power LED indicator
6	Train status LED indicator

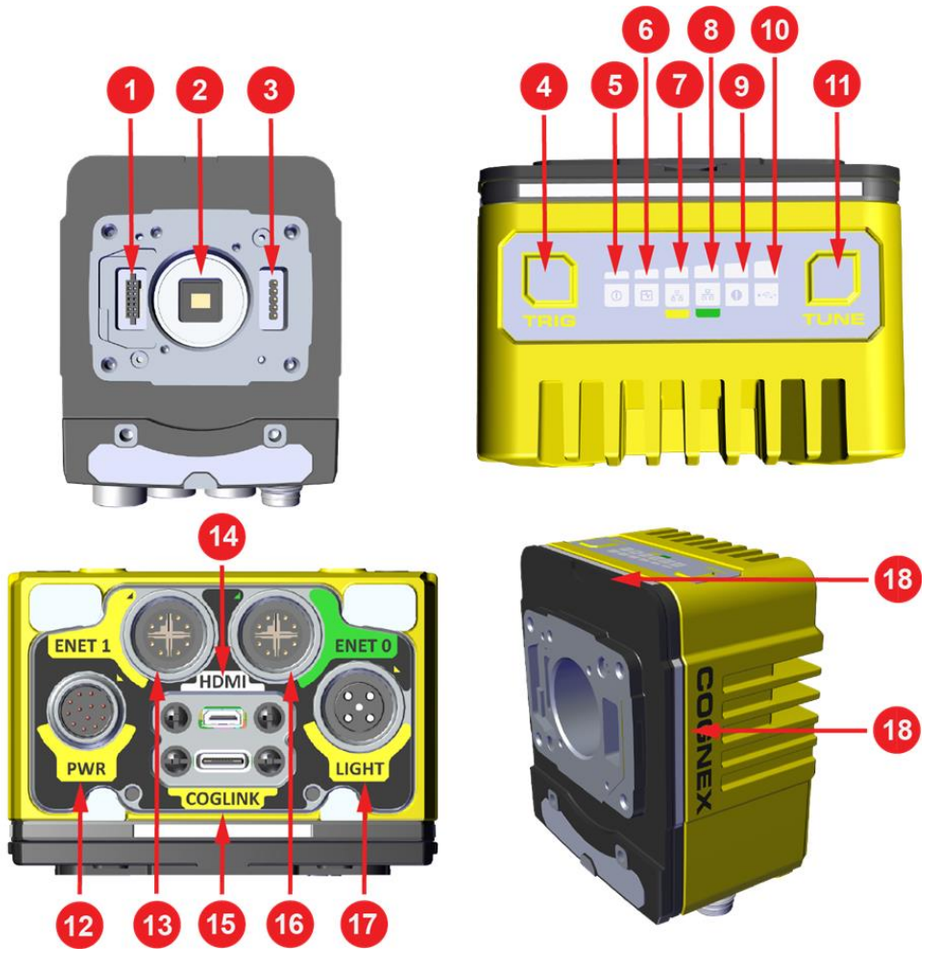

7	Ethernet 1 status LED
8	Ethernet 0 status LED
9	Error LED indicator
10	Coglink/USB-C status LED
11	Tune button
12	Power I/O Breakout cable connector
13	Ethernet connector 1

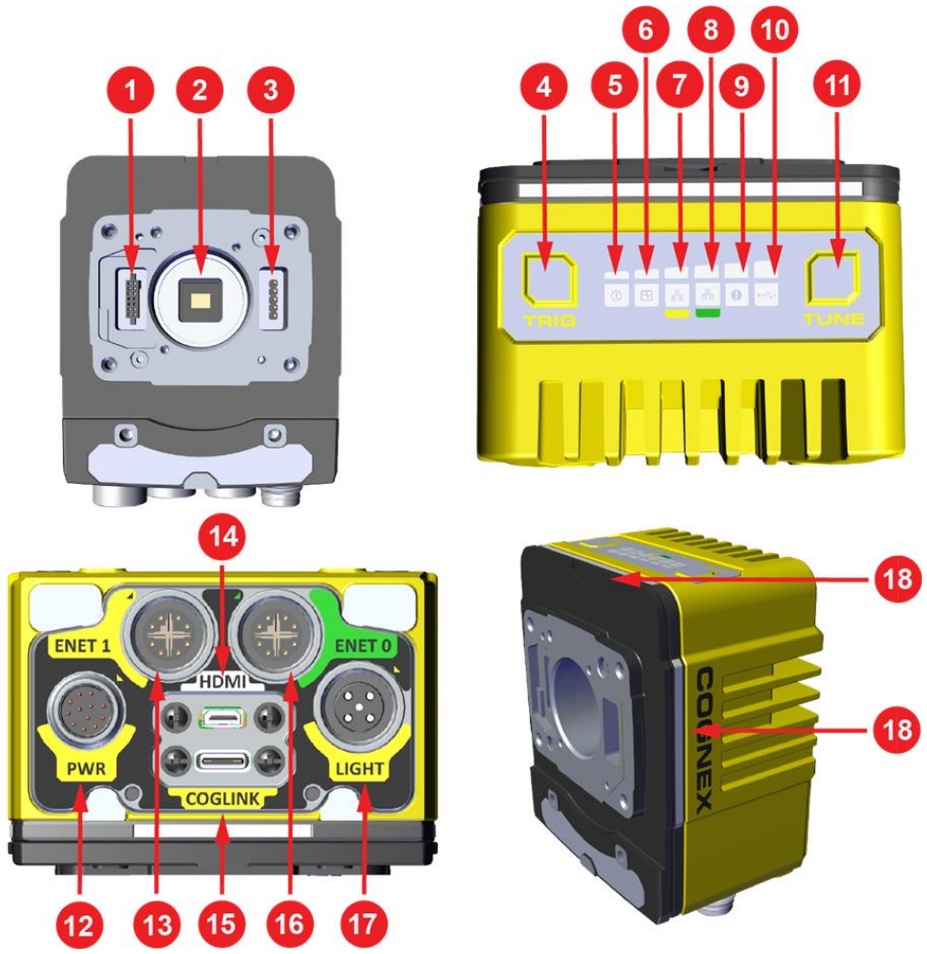

14	Micro-HDMI connector
15	Coglink/USB-C connector
16	Ethernet connector 0
17	Light connector
18	Ring LED indicator

Dimensions

The following sections list dimensions of the vision system.

Note:

- Dimensions are in millimeters and are for reference purposes only.
- All specifications are for reference purposes only and can change without notice.

In-Sight 3800 with 45 mm Lens Cover

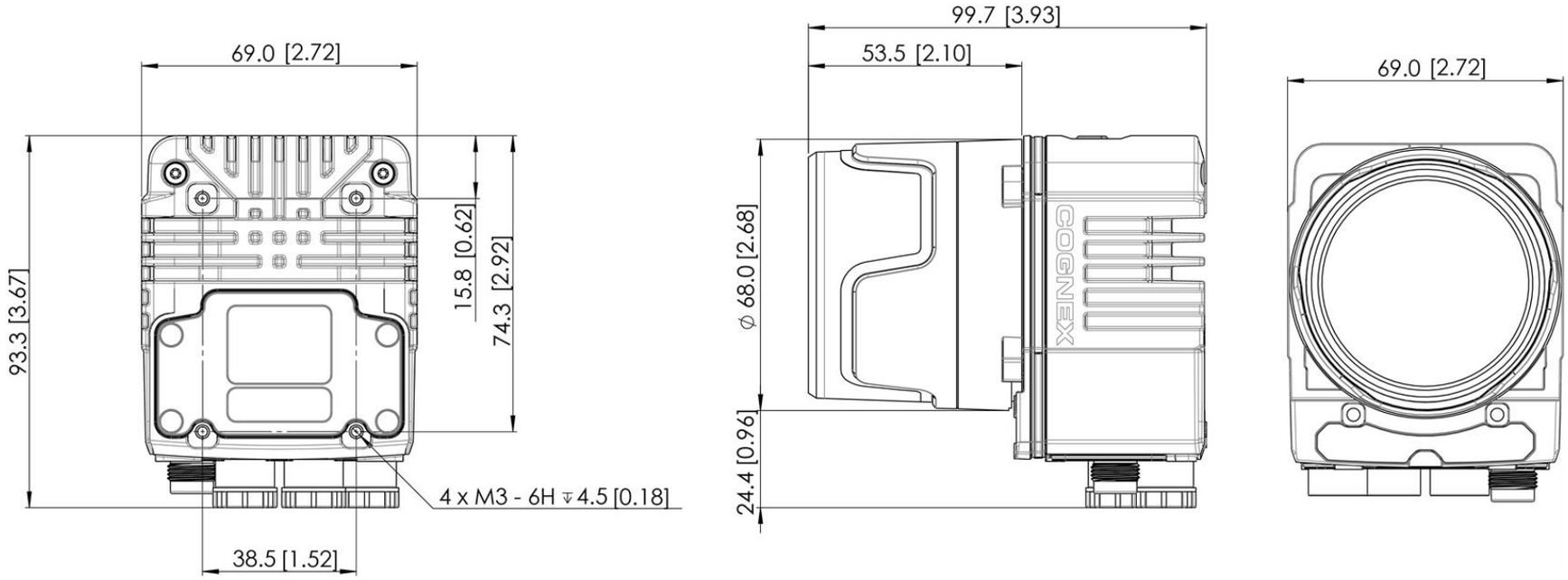

In-Sight 3800 with 60 mm Lens Cover

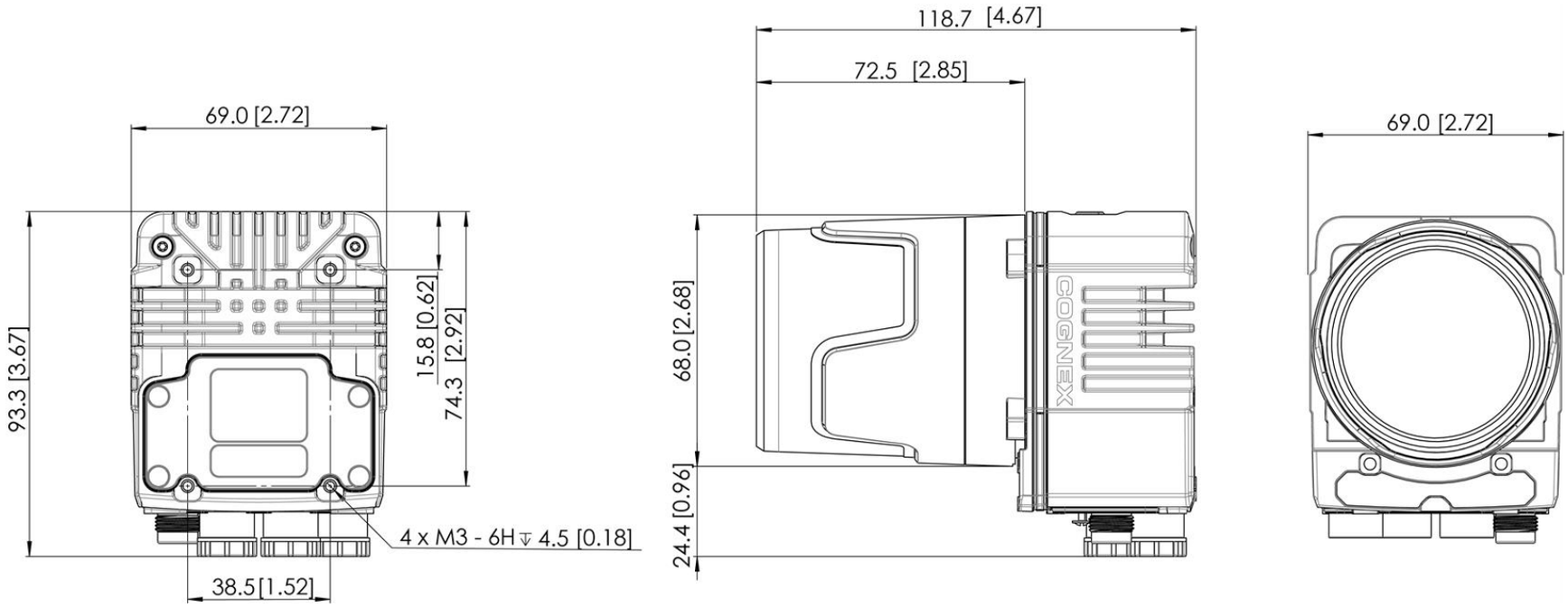

In-Sight 3800 with 75 mm Lens Cover

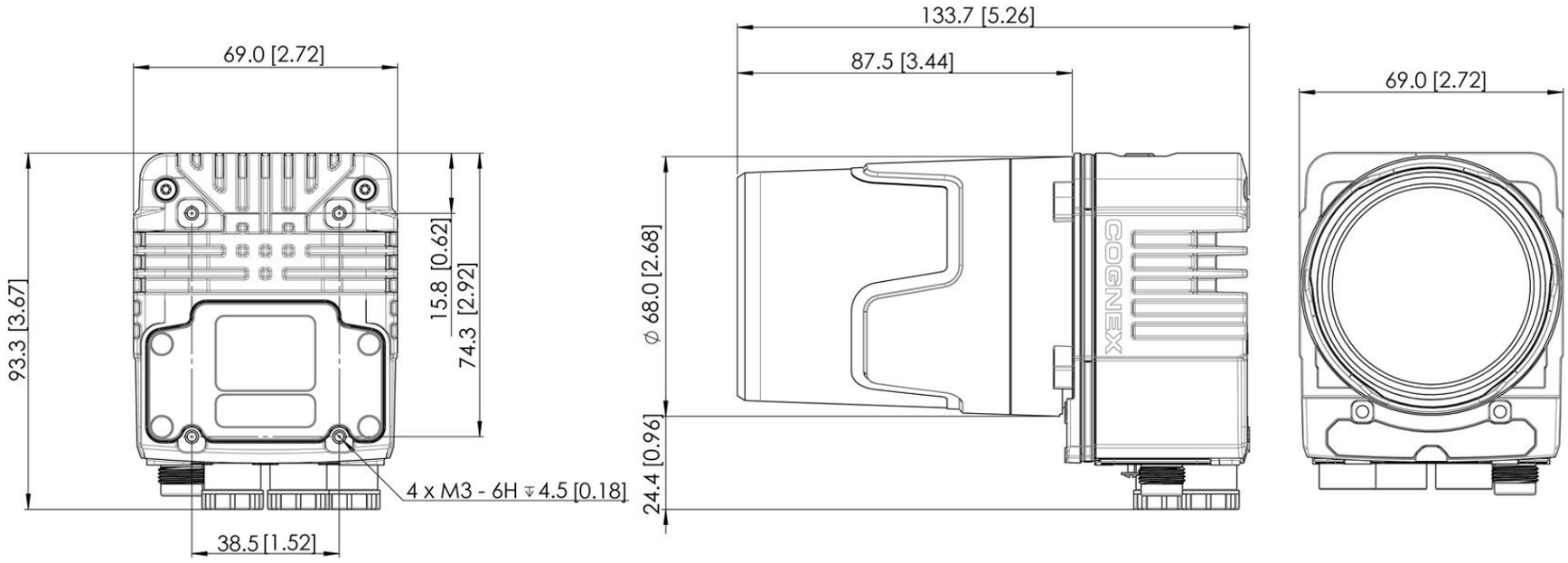

In-Sight 3800 Multi-Torch with Standard Front Cover

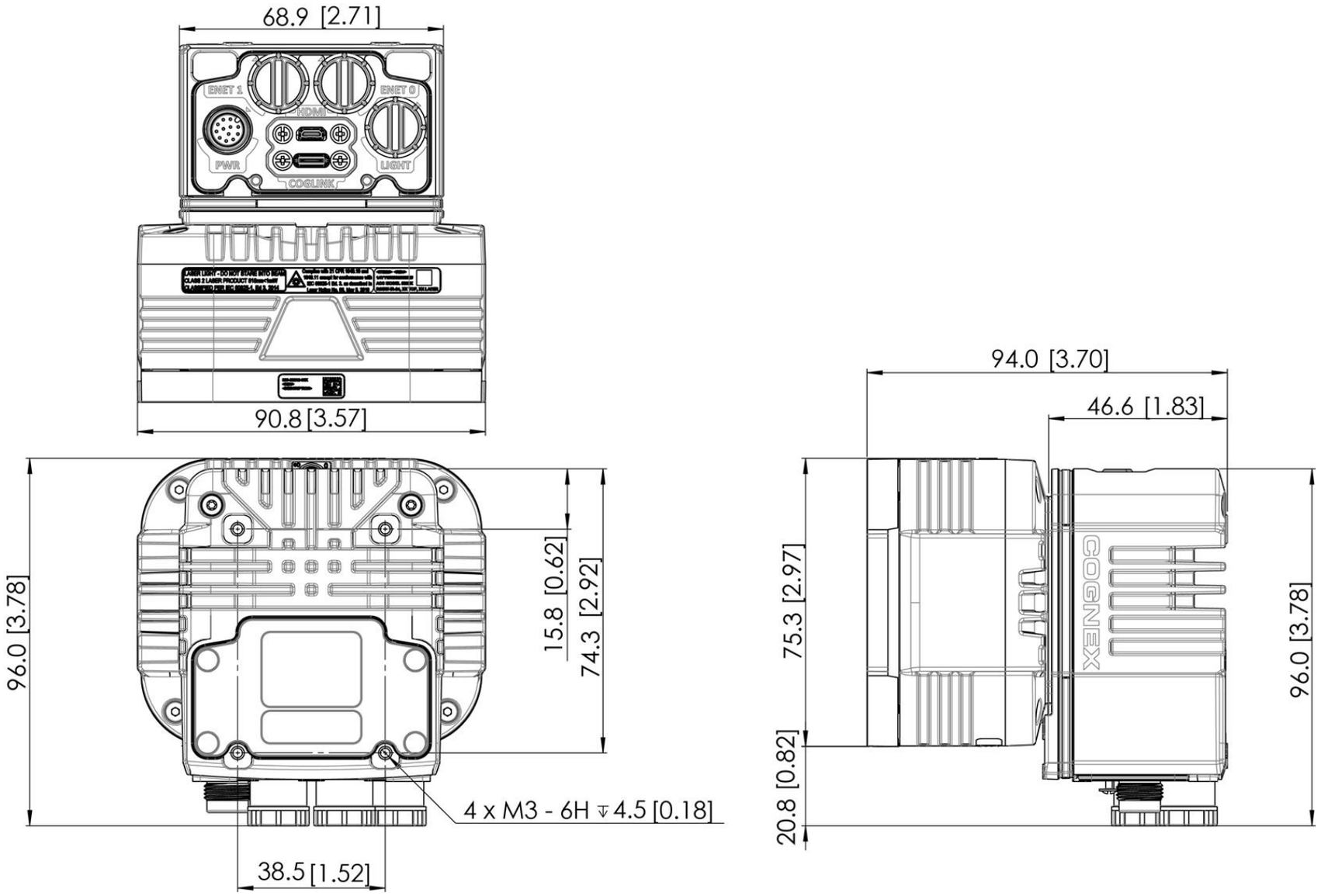

In-Sight 3800 Multi-Torch with Dome Attachment

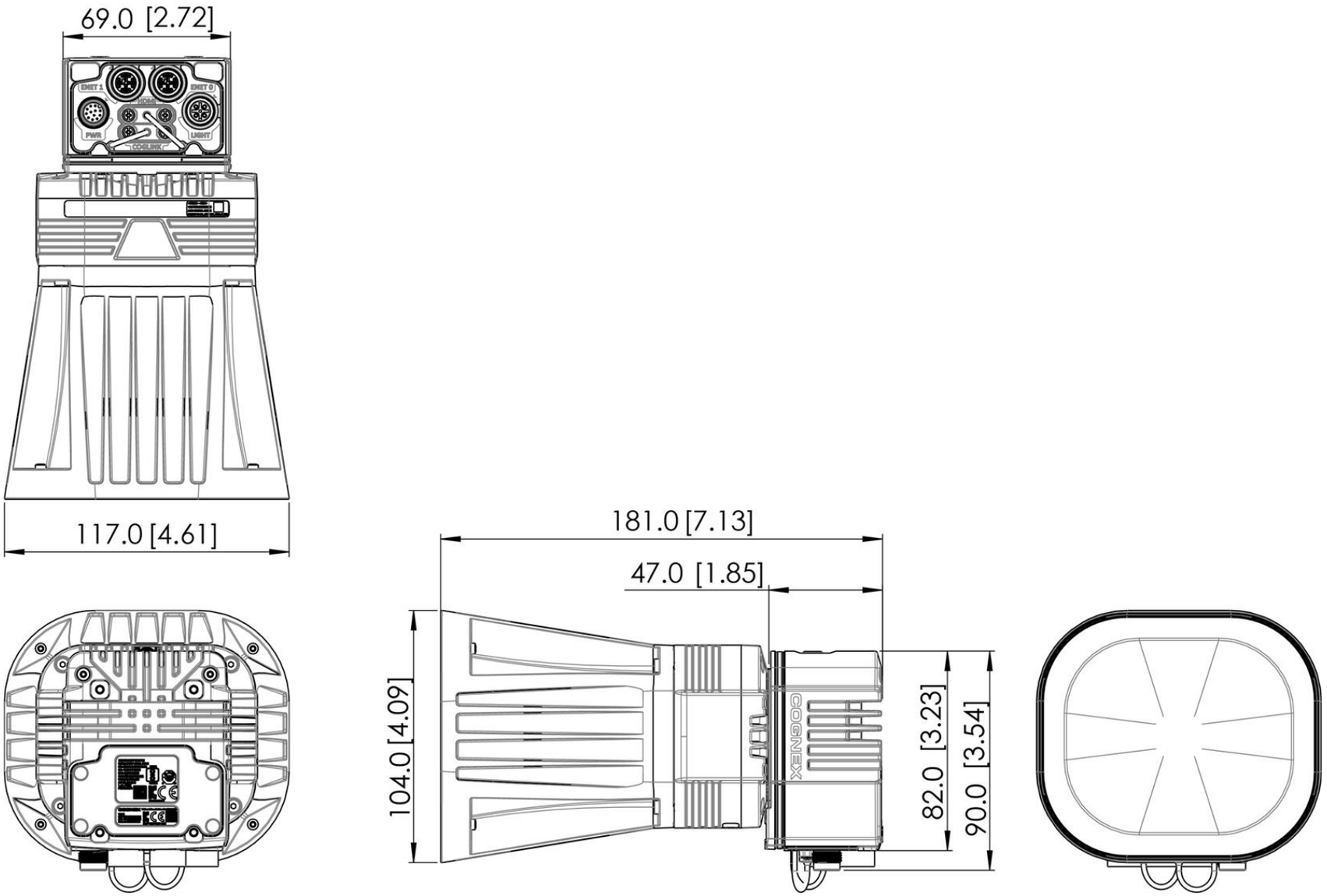

In-Sight 3800 - Smart Camera Only

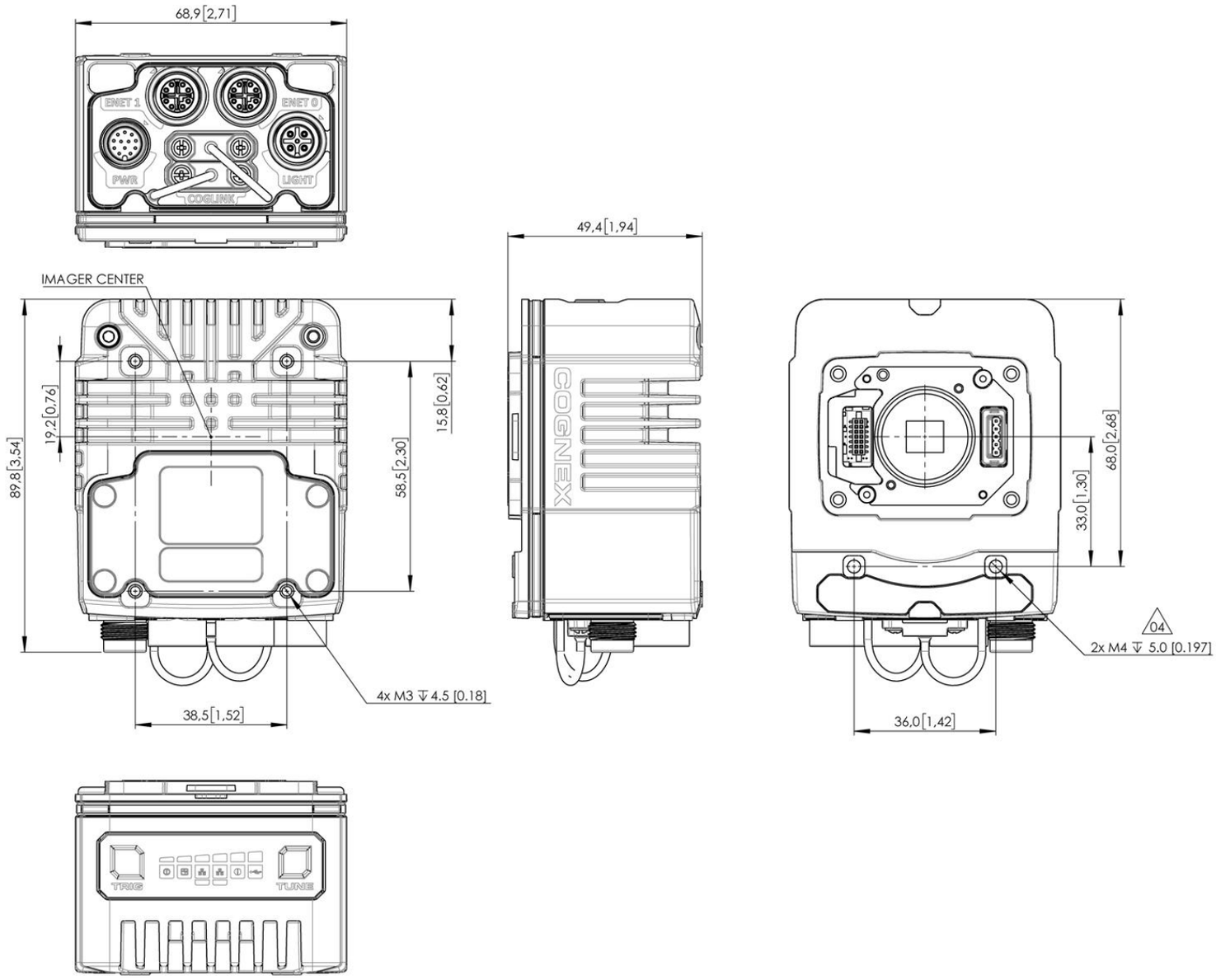

Field of View and Distance

This section provides the Field of View (FoV) values for the various In-Sight 3800 vision systems.

In-Sight 3800 FoV values with 1.6 MP Sensor (IS3801)

16 mm Focal Length:

Working Distance	Horizontal Values	Vertical Values	Diagonal Values
150 mm [5.91 in]	47 mm [1.86 in]	35 mm [1.39 in]	59 mm [2.33 in]
200 mm [7.87 in]	63 mm [2.48 in]	47 mm [1.86 in]	79 mm [3.1 in]
500 mm [19.69 in]	158 mm [6.2 in]	118 mm [4.65 in]	197 mm [7.75 in]
1000 mm [39.37 in]	315 mm [12.4 in]	236 mm [9.3 in]	394 mm [15.5 in]
2000 mm [78.74 in]	630 mm [24.8 in]	473 mm [18.6 in]	788 mm [31 in]

24 mm Focal Length:

Working Distance	Horizontal Values	Vertical Values	Diagonal Values
200 mm [7.87 in]	42 mm [1.65 in]	32 mm [1.24 in]	53 mm [2.07 in]
500 mm [19.69 in]	105 mm [4.13 in]	79 mm [3.1 in]	131 mm [5.17 in]
1000 mm [39.37 in]	210 mm [8.27 in]	158 mm [6.2 in]	263 mm [10.33 in]
2000 mm [78.74 in]	420 mm [16.54 in]	315 mm [12.4 in]	525 mm [20.67 in]
4000 mm [157.48 in]	840 mm [33.07 in]	630 mm [24.8 in]	1050 mm [41.34 in]

In-Sight 3800 FoV values with 3 MP Sensor (IS3803)

16 mm Focal Length:

Working Distance	Horizontal Values	Vertical Values	Diagonal Values
150 mm [5.90 in]	67 mm [2.64 in]	50 mm [1.97 in]	83 mm [3.27 in]
200 mm [7.87 in]	89 mm [3.50 in]	67 mm [2.64 in]	111 mm [4.37 in]
500 mm [19.69 in]	223 mm [8.78 in]	167 mm [6.57 in]	278 mm [10.94 in]
1000 mm [39.37 in]	445 mm [17.52 in]	333 mm [13.11 in]	579 mm [22.80 in]
2000 mm [78.74 in]	890 mm [35.04 in]	666 mm [26.22 in]	1112 mm [43.78 in]

24 mm Focal Length:

Working Distance	Horizontal Values	Vertical Values	Diagonal Values
200 mm [7.87 in]	59 mm [2.32 in]	44 mm [1.73 in]	74 mm [2.91 in]
500 mm [19.69 in]	148 mm [5.83 in]	111 mm [4.37 in]	185 mm [7.28 in]
1000 mm [39.37 in]	297 mm [11.69 in]	222 mm [8.74 in]	371 mm [14.60 in]
2000 mm [78.74 in]	593 mm [23.35 in]	444 mm [17.48 in]	741 mm [29.17 in]
4000 mm [157.48 in]	1187 mm [46.73 in]	888 mm [34.96 in]	1482 mm [58.35 in]

In-Sight 3800 FoV values with 5 MP Sensor (IS3805)

16 mm Focal Length:

Working Distance	Horizontal Values	Vertical Values	Diagonal Values
150 mm [5.90 in]	79 mm [3.11 in]	66 mm [2.60 in]	103 mm [4.06 in]
200 mm [7.87 in]	106 mm [4.17 in]	88 mm [3.46 in]	138 mm [5.43 in]
500 mm [19.69 in]	264 mm [10.39 in]	221 mm [8.70 in]	344 mm [13.54 in]
1000 mm [39.37 in]	528 mm [20.79 in]	442 mm [17.40 in]	688 mm [27.09 in]
2000 mm [78.74 in]	1056 mm [41.57 in]	883 mm [34.76 in]	1376 mm [54.17 in]

24 mm Focal Length:

Working Distance	Horizontal Values	Vertical Values	Diagonal Values
200 mm [7.87 in]	70 mm [2.76 in]	59 mm [2.32 in]	92 mm [3.62 in]
500 mm [19.69 in]	176 mm [6.93 in]	147 mm [5.79 in]	229 mm [9.02 in]
1000 mm [39.37 in]	352 mm [13.86 in]	294 mm [11.57 in]	459 mm [18.07 in]
2000 mm [78.74 in]	704 mm [27.72 in]	589 mm [23.19 in]	918 mm [36.14 in]
4000 mm [157.48 in]	1408 mm [55.43 in]	1178 mm [46.38 in]	1835 mm [72.24 in]

Mounting the Vision System

The vision system provides mounting holes for attachment to a mounting surface.

CAUTION: The vision system has to be grounded, either by mounting the vision system to a fixture that is electrically grounded or by attaching a wire from the mounting fixture of the vision system to frame ground or Earth ground. If a ground wire is used, it has to be attached to one of the mounting points on the bottom plate of the vision system and not to the mounting points on the front of the vision system.

Mounting Bracket (BKT-INS-01)

1. Align the mounting bracket with the mounting holes on the vision system. If using the M3 mounting holes, you can attach the mounting bracket in either orientation.
2. Insert the M3 screws into the mounting holes and tighten. The maximum torque is 0.90 Nm (8 in-lb).

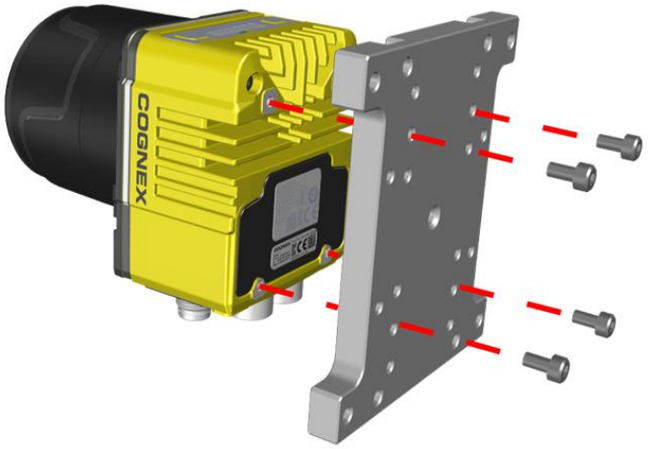

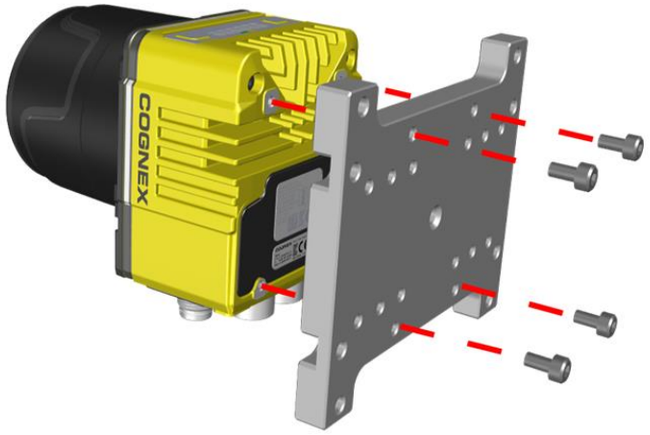

Converter Mounting Bracket (ISB-7000-7K)

1. Align the converter mounting bracket with the mounting holes on the vision system.
2. Insert the M3 screws into the mounting holes and use a 2.5 mm hex wrench to tighten. The maximum torque is 0.90 Nm (8 in-lb).

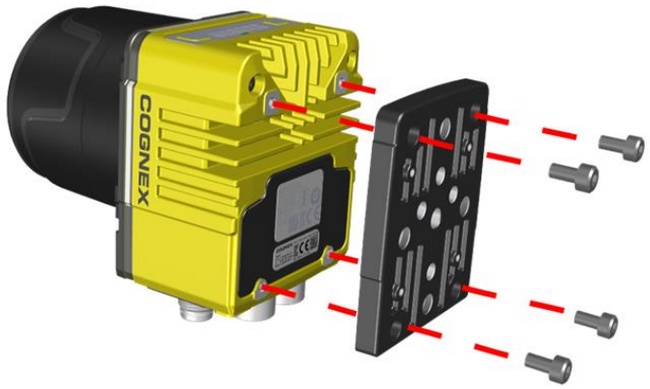

Converter Mounting Bracket (ISB-7000-5K)

1. Align the converter mounting bracket with the mounting holes on the vision system.
2. Insert the Phillips flat head screws into the mounting holes and tighten. The maximum torque is 0.56 Nm (5 in-lb).

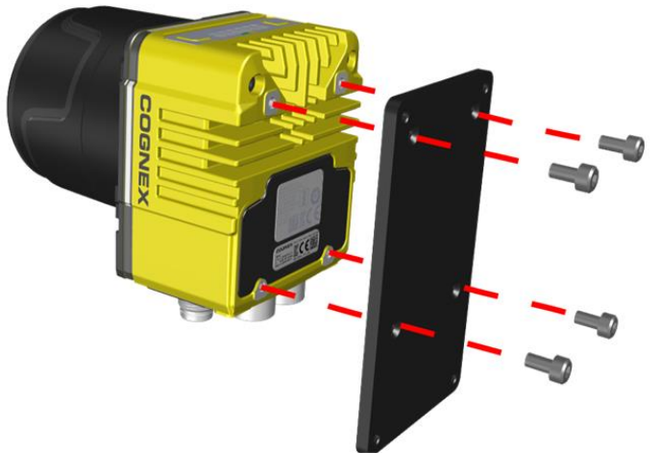

Connection Options

This section summarizes connection options.

Connecting the Ethernet Cable



CAUTION: The Ethernet cable shield has to be grounded at the far end. If the far end device is not grounded, add a ground wire in compliance with local electrical codes. The cable is typically plugged into a switch or router, which has to have a grounded Ethernet connector. Use a digital voltmeter to validate the grounding.

---

1. Connect the M12 connector of the Ethernet cable to the green ENET0 connector of the vision system.
2. Connect the RJ-45 connector of the Ethernet cable to a switch, router, or PC.

Connecting the Power and I/O Breakout Cable

CAUTION: To reduce emissions, connect the far end of the Breakout cable shield to frame ground.

Note:

- Perform wiring or adjustments to I/O devices when the vision system is not receiving power.
- You can clip unused wires short or use a tie made of non-conductive material to tie them back. Keep bare wires separated from the +24 V DC wire.

1. Verify that the 24 V DC power supply is unplugged and not receiving power.
2. Attach the +24 V DC connector of the Power and I/O Breakout cable and Ground wires to the corresponding terminals on the power supply. For more information, see *Specifications* on page 50.
3. Attach the M12 connector of the Power and I/O Breakout Cable to the 24 V DC connector of the vision system.
4. Restore power to the 24 V DC power supply and turn it on if necessary.

Installing Lenses and Lighting

Installing Lenses with Multi Torch

This procedure is valid for both the High Speed Liquid Lens and the Manual Lens installations.

1. Remove the adapter from the sensor.

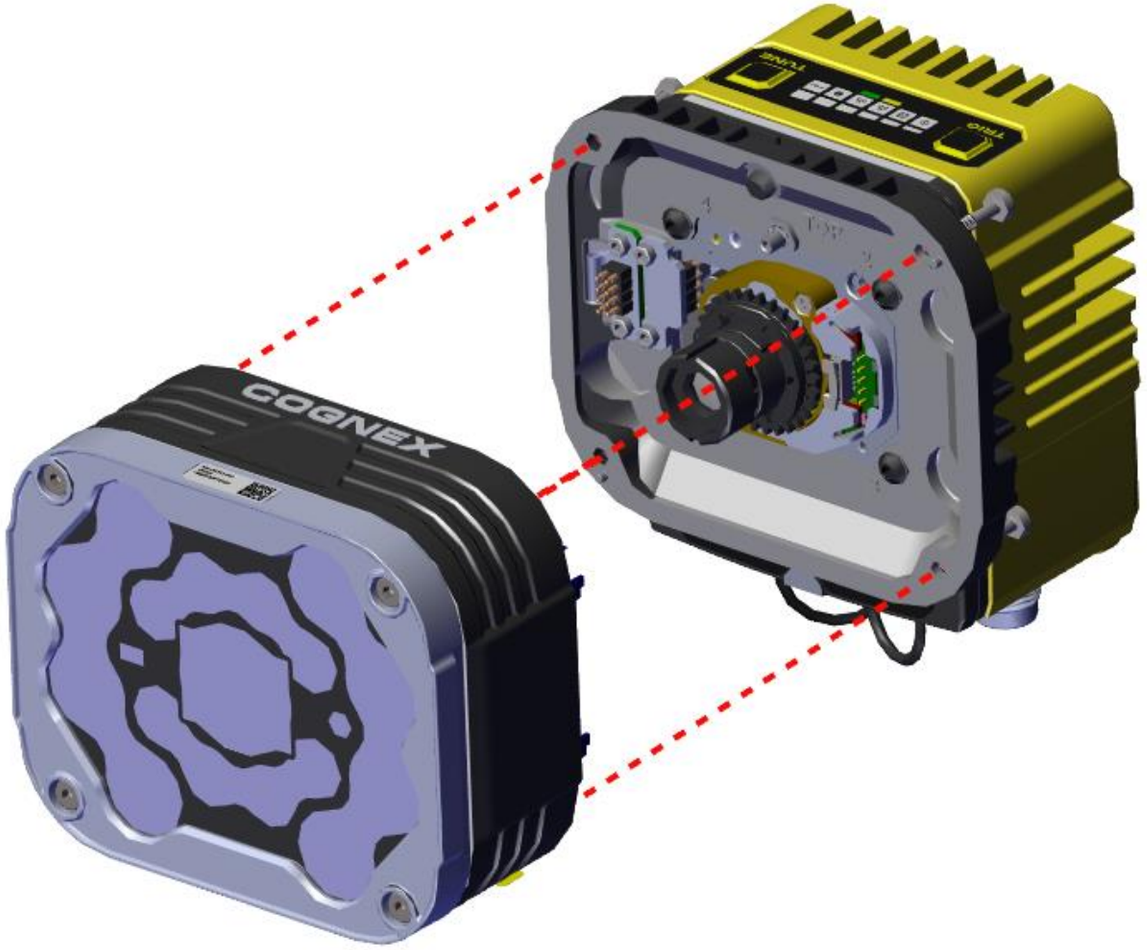

2. Unscrew the two captive screws holding the lens.

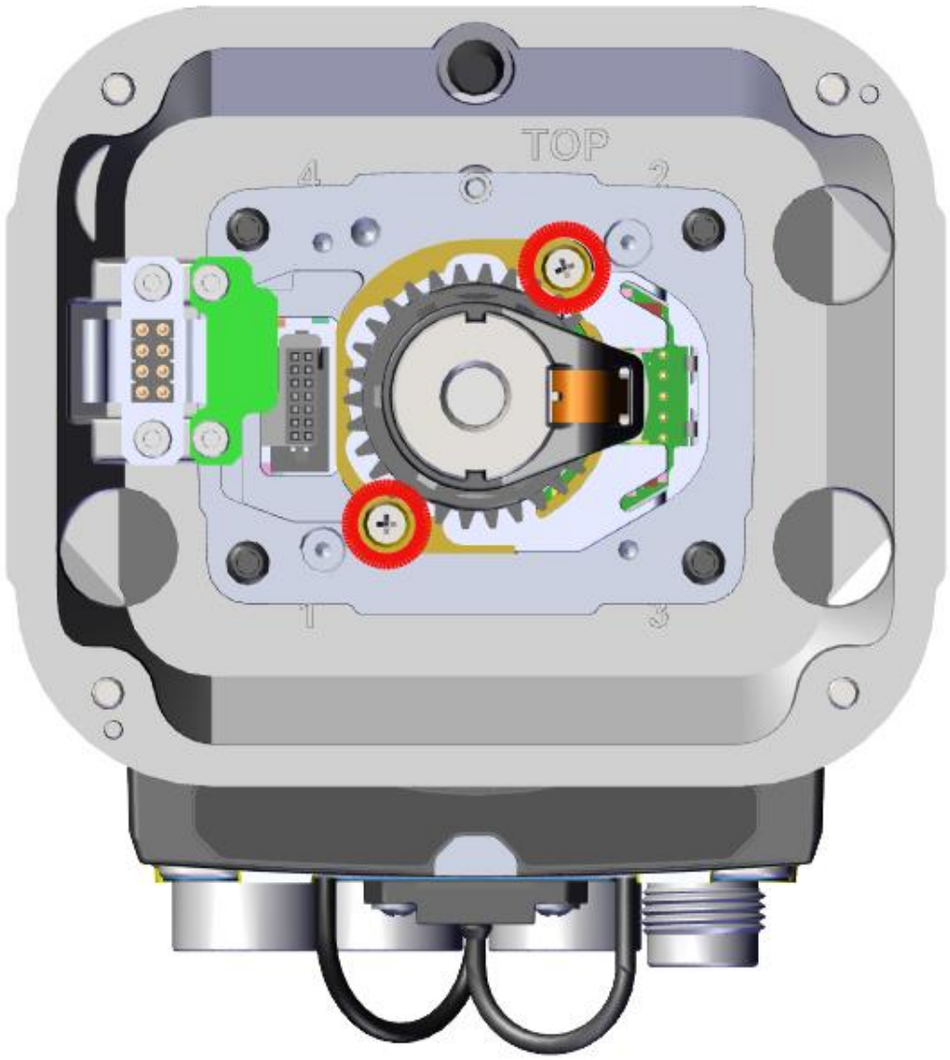

3. Remove the lens from the sensor.



Note: When swapping the lens out, make sure not to pull on the lens itself but on the housing of the lens.

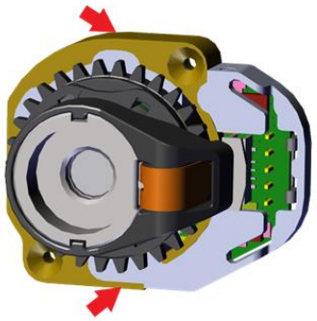

4. Insert the new lens and tighten the two captive screws.



5. Tighten one of the M2 x 8 mm screws halfway, then tighten the other M2 x 8 mm screw halfway. Incrementally tighten each screw to 0.34 Nm using a torque wrench.

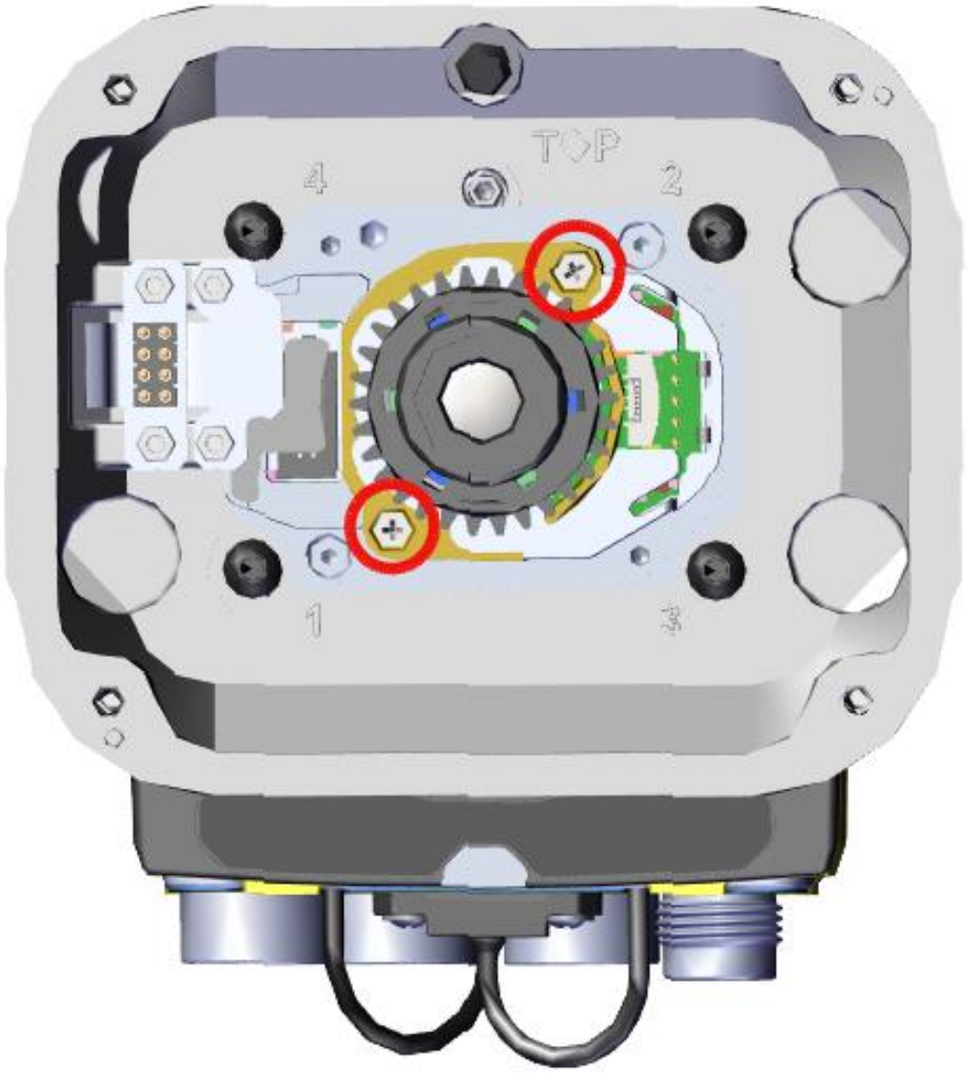

6. Replace the adapter on the sensor.

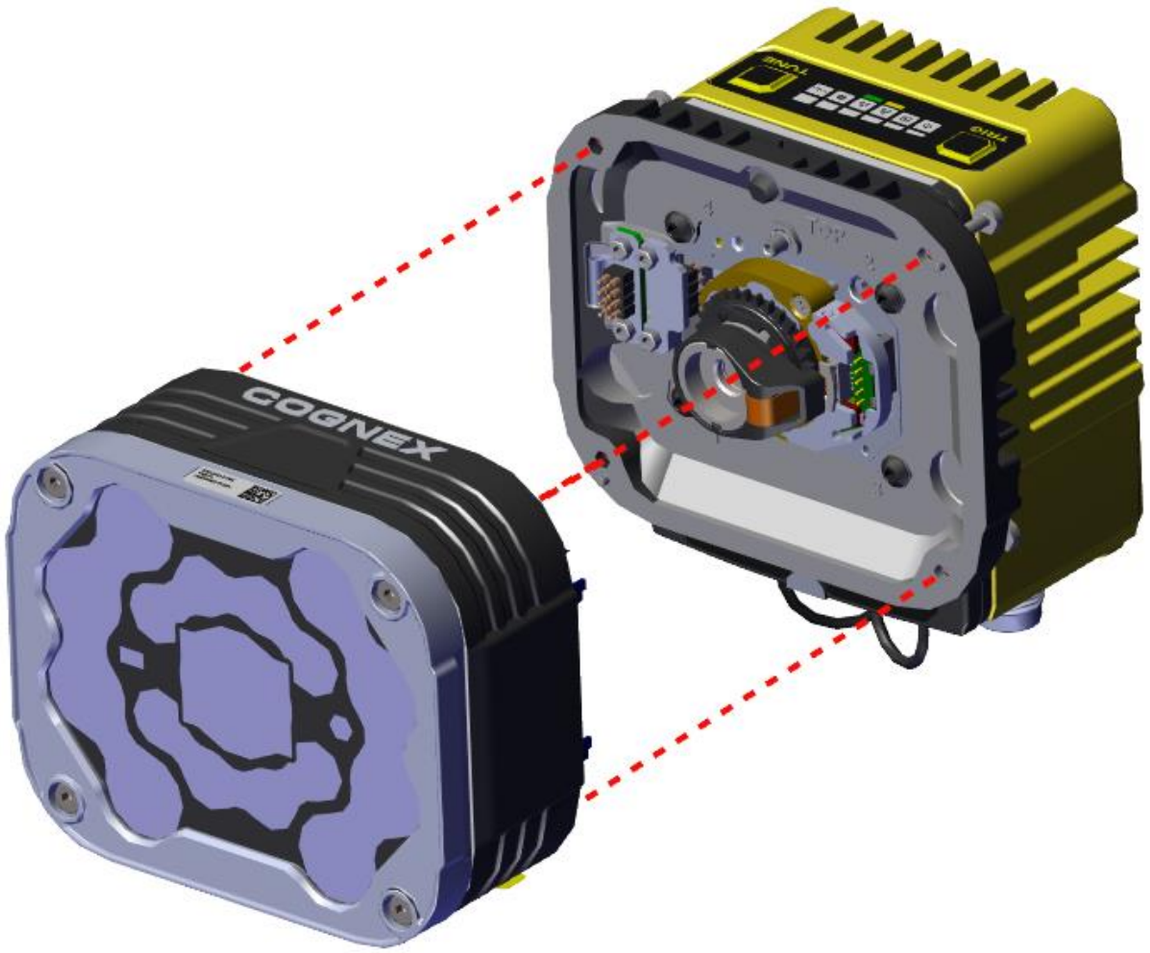

Note:
Observing the tightening sequence below, tighten all four screws to 0.5 Nm using a torque wrench.

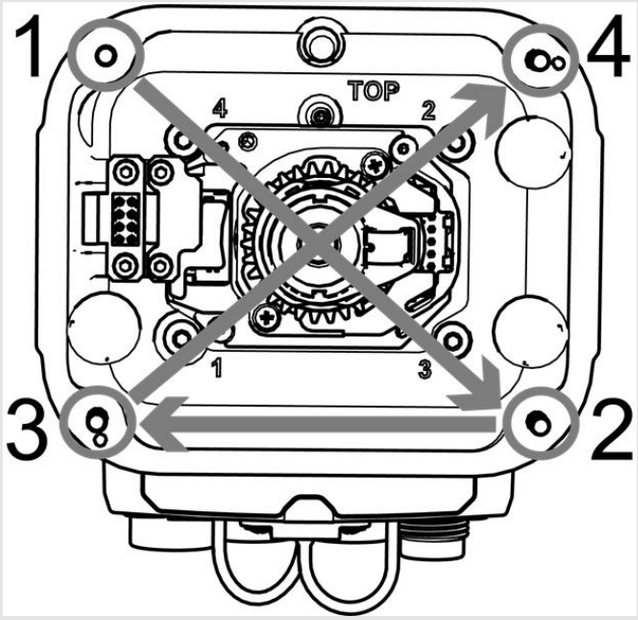

Installing High Speed Liquid Lens with Torch-HR

1. Snap the cable into the vision system. Connect the side with the black cover to the vision system, and connect the side with the 2D code to the Torch-HR.

Note: Use caution when installing the cable.



2. Screw in the four screws to attach the lens to the vision system.

> **Note**: When using a C-mount lens, screw the lens into the C-mount threads instead of attaching the liquid lens. The illumination module installation is the same.



3. Bend the other end of the cable and feed the cable through the back of the illumination module.

Note: Only snap the cable into place after you have completely attached the vision system to the illumination module with the screws. Otherwise, the cable can break.

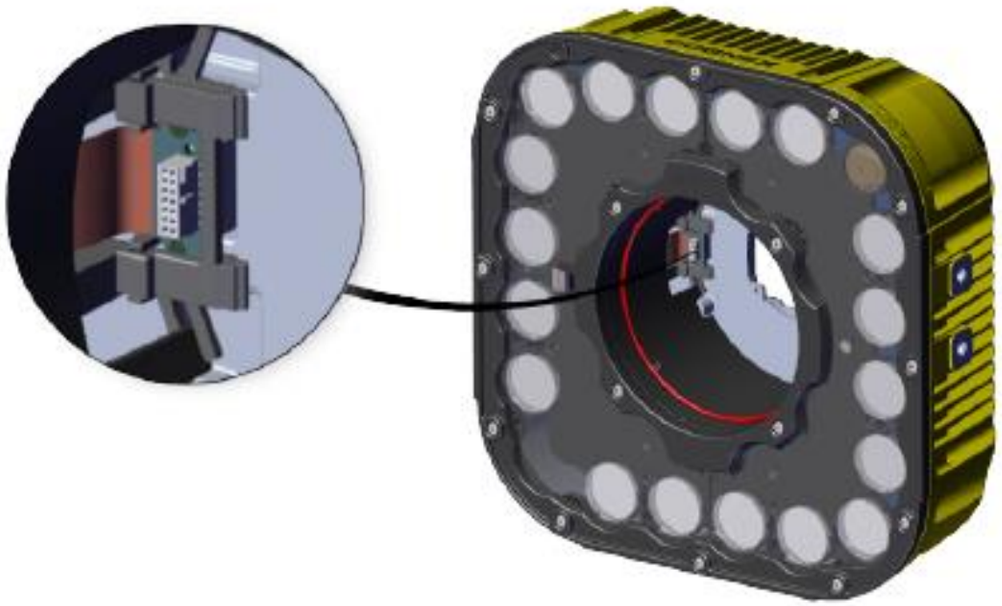

4. Screw in the four screws from the illumination module into the vision system. Tighten each screw to 0.75 Nm.

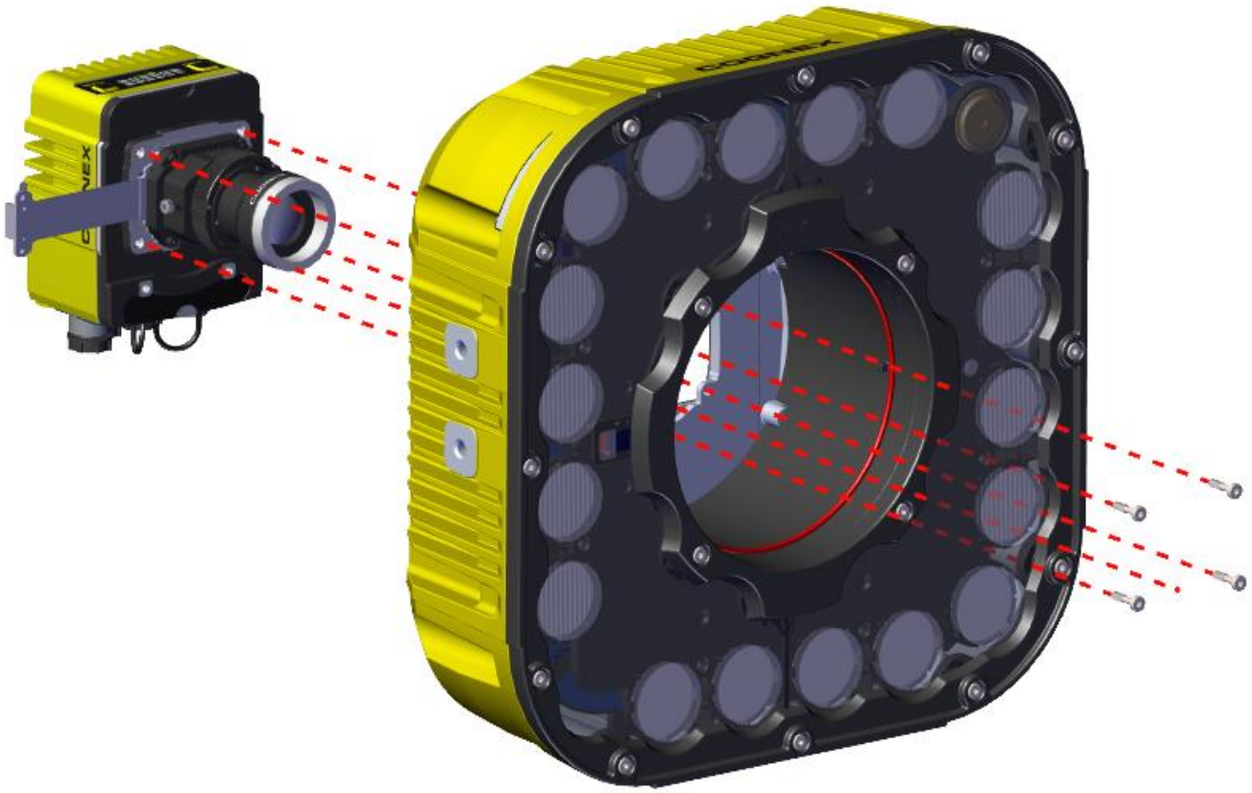

5. Snap the cable into place in the illumination module.

6. Align the slots in the cover with the illumination module. Twist slightly to lock the cover in.

> **Note**: You can remove the lens cover at any time by twisting in the opposite direction. Removing the lens cover allows for access to the lens or installing a new lens without disassembling the Torch-HR.

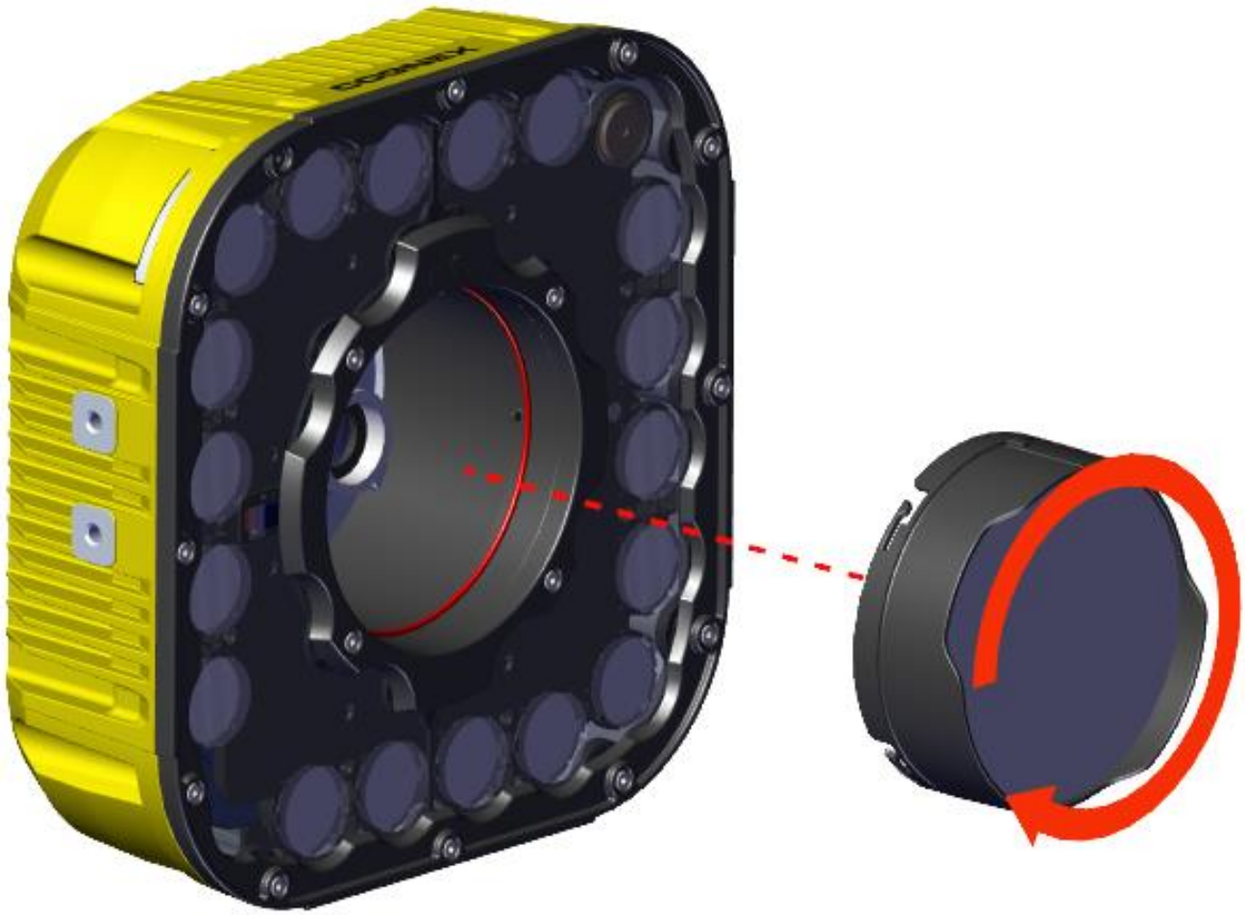

Specifications

The following sections list general specifications for the vision system.

In-Sight 3800 Series Vision System

Specification	In-Sight 3800
Lens Type	C-Mount, Cognex High Speed Liquid Lens Autofocus, or Cognex manual focus lens (used with Multi-Torch Illumination accessory).
Trigger	1 opto-isolated, acquisition trigger input.
Discrete Inputs	1 opto-isolated, acquisition trigger input. Up to 3 general-purpose inputs when connected to the Breakout cable.
Discrete Outputs	Up to 4 high-speed outputs when connected to the Breakout cable.
Status LEDs	Pass/Fail LED and Indicator Ring, Network LED, and Error LED.
Memory	4 GB
Job / Program Storage	7.2 GB non-volatile flash memory, unlimited storage using remote network device.
Image Processing Memory	Dynamic allocation shared with Job / Program Storage
Network Communication	2 Ethernet ports, 10/100/1000 BaseT with auto MDIX. IEEE 802.3 TCP/IP Protocol. Supports DHCP, static, and link-local IP address configuration. One port supports TSN networks.
Power Consumption	24 V DC ± 10%, 2.0 A maximum.
Power Output	24 V DC at 1.0 A maximum to external light.
Material	Die-cast and extruded aluminum and zinc housing.

Specification	In-Sight 3800
Finish	Painted.
Mounting	Four M3 threaded mounting holes. See *Mounting Brackets* on page 19 for supported mounts. Pattern: 38.5 × 58.5 mm (1.52 × 2.60 in)
Weight	In-Sight 3800 with no accessories attached: 570 g (20.10 oz). • with 45 mm plastic C-Mount cover (COV-380-CMNT-45): 625 g (22.0 oz.) - no lens included. • with 60 mm plastic C-Mount cover (COV-380-CMNT-60): 635 g (22.4 oz.) - no lens included. • with 75 mm plastic C-Mount cover (COV-380-CMNT-75): 650 g (22.9 oz.) - no lens included. • with Multi-Torch Illumination, High Speed Liquid Lens (16 mm), and standard front cover: 840 g (29.6 oz.). • with Multi-Torch Illumination, High Speed Liquid Lens (16 mm), and dome attachment: 970 g (34.2 oz.).
Case Temperature	0° C to 40° C (32° F to 104° F)
Storage Temperature	-20° C to 80° C (-4° F to 176° F)
Humidity	< 95% non-condensing
Protection	IP67 with all cables properly attached (or the provided connector plug installed) and the IP67-rated cover or Multi Torch attachment properly installed.
Shock (Shipping and Storage)	IEC 60068-2-27 - 500 shocks in each polarity of each (X, Y, and Z) axis, 3000 shocks total, semi-sinusoidal, 11 g, 10 ms
Vibration (Shipping and Storage)	IEC 60068-2-6: vibration test in each of the three main axis for 2 hours at 10 Gs (10 to 500 Hz at 100 m/s^2 / 15 mm) with cables or cable plugs and a 150 gram or lighter lens attached.
Regulations/Conformity	CE, FCC, KCC, TÜV SÜD NRTL, EU RoHS, China RoHS

In-Sight 3800 Series Vision System Image Sensor

Specification	IS3801M	IS3801C	IS3803M	IS3803C	IS3805M	IS3805C
Bit Depth	8-bit monochrome	24-bit color	8-bit monochrome	24-bit color	8-bit monochrome	24-bit color
Frames Per Second (Maximum, Full Resolution)	125 FPS	52 FPS	47 FPS	30 FPS	32 FPS	21 FPS
Sensor Type	1/2.3" CMOS, global shutter		1/1.8" CMOS, global shutter		2/3" CMOS, global shutter	
Image Sensor Properties	6.3 mm diagonal, 3.45 × 3.45 µm square pixels		8.9 mm diagonal, 3.45 × 3.45 µm square pixels		11.1 mm diagonal, 3.45 × 3.45 µm square pixels	
Maximum Image Resolution (pixels)	1440 × 1080		2048 × 1536		2448 × 2048	
Electronic Shutter Speed	19.5 µs to 200,000 µs		25.1 µs to 200,000 µs		19.1 µs to 200,000 µs	

Specification	IS3808M	IS3808C	IS3812M	IS3812C	IS3816M	IS3816C
Bit Depth	8-bit monochrome	24-bit color	8-bit monochrome	24-bit color	8-bit monochrome	24-bit color

Specification	IS3808M	IS3808C	IS3812M	IS3812C	IS3816M	IS3816C
Frames Per Second (Maximum, Full Resolution)	24	12	22	11	18	8
Sensor Type	2/3" CMOS, global shutter		1/1.1" CMOS, global shutter		1.1" CMOS, global shutter	
Image Sensor Properties	11.1 mm diagonal, 2.74 × 2.74 µm square pixels		14.0 mm diagonal, 2.74 × 2.74 µm square pixels		16.8 mm diagonal, 2.74 x 2.74 µm square pixels	
Maximum Image Resolution (pixels)	2840 × 2840		4096 × 3000		5320 × 3032	
Electronic Shutter Speed	22 µs to 200,000 µs		22 µs to 200,000 µs		29.1 µs to 200,000 µs	

LED Wavelengths

The following table shows LED types and the related peak wavelengths.

Model	LED	Wavelength

In-Sight 3800 with Multi-Torch Illumination	Multicolor	• 453 nm (blue)
		• 525 nm (green)
		• 625 nm (red)
		• Color temperature: 6740 Kelvin (white) Chromaticity coordinates acc. to CIE 1931
		  • Cx 0.31 (typ.)
		  • Cy 0.32 (typ.)
		• IR Wavelength: 850 nm
		Note: For color vision systems, select the White option.

Regulations and Conformity

Note: For the most current CE and UKCA declaration and regulatory conformity information, see the Cognex support site: cognex.com/support.

In-Sight 3800 vision systems have the Regulatory Model number 50103 and meet or exceed the requirements of all applicable standards organizations for safe operation. However, as with any electrical equipment, the best way to ensure safe operation is to operate them according to the agency guidelines that follow. Please read these guidelines carefully before using your device.

Safety and Regulatory	
Manufacturer	Cognex Corporation One Vision Drive Natick, MA 01760 USA
CE	In-Sight 3800 1.6 MP, 3 MP, 5 MP: Regulatory Model 50103 This is a class A product. In a domestic environment this product may cause radio interference in which case the user may be required to take immediate measures. This equipment complies with the essential requirements of the EU Directive 2014/30/EU. Declarations are available from your local representative.
EU RoHS	Compliant to the most recent applicable directive.
FCC	FCC Part 15, Class A This equipment has been tested and found to comply with the limits for a Class A digital device, pursuant to part 15 of the FCC Rules. These limits are designed to provide reasonable protection against harmful interference when the equipment is operated in a commercial environment. This equipment generates, uses, and can radiate radio frequency energy and, if not installed and used in accordance with the instruction manual, may cause harmful interference to radio communications. Operation of this equipment in a residential area is likely to cause harmful interference in which case the user will be required to correct the interference at his own expense.

Safety and Regulatory	
Korea 	This device is certified for office use only and if used at home, there can be frequency interference problems. A급 기기(업무용 방송통신기자재): 이 기기는 업무용(A급) 전자파적합기기로서 판매자 또는 사용자는 이 점을 주의하시기 바라며, 가정외의 지역에서 사용하는 것을 목적으로 합니다. In-Sight 3800 1.6 MP, 3 MP, 5 MP: Regulatory Model 50103
TÜV	In-Sight 3800 1.6 MP, 3 MP, 5 MP: Regulatory Model 50103
	NRTL: TÜV SÜD SCC/NRTL OSHA Scheme for UL/CAN 61010-1.
	CB report available upon request. TÜV SÜD, IEC/EN 61010-1.
UK CA	In-Sight 3800 1.6 MP, 3 MP, 5 MP: Regulatory Model 50103 This is a class A product. In a domestic environment this product may cause radio interference in which case the user may be required to take immediate measures. This equipment complies with the essential requirements of the Electromagnetic Compatibility Regulations 2016. Declarations are available from your local representative.

中国大陆RoHS (Information for China RoHS Compliance)

根据中国大陆《电子信息产品污染控制管理办法》(也称为中国大陆RoHS)，以下部份列出了本产品中可能包含的有毒有害物质或元素的名称和含量。



	Hazardous Substances 有害物质					
Part Name 部件名称	Lead (Pb) 铅	Mercury (Hg) 汞	Cadmium (Cd) 镉	Hexavalent Chromium (Cr (VI)) 六价铬	Polybrominated biphenyls (PBB) 多溴联苯	Polybrominated diphenyl ethers (PBDE) 多溴二苯醚
Regulatory Model 50103	X	O	O	O	O	O

This table is prepared in accordance with the provisions of SJ/T 11364.
这个标签是根据SJ / T 11364 的规定准备的。

O: Indicates that said hazardous substance contained in all of the homogeneous materials for this part is below the limit requirement of GB / T26572 - 2011.
表示本部件所有均质材料中含有的有害物质低于GB / T26572 - 2011 的限量要求。

X: Indicates that said hazardous substance contained in at least one of the homogeneous materials used for this part is above the limit requirement of GB / T26572 - 2011.
表示用于本部件的至少一种均质材料中所含的危害物质超过GB / T26572 - 2011 的限制要求。

For European Community Users

Cognex complies with Directive 2012/19/EU OF THE EUROPEAN PARLIAMENT AND OF THE COUNCIL of 4 July 2012 on waste electrical and electronic equipment (WEEE).

This product has required the extraction and use of natural resources for its production. It may contain hazardous substances that could impact health and the environment, if not properly disposed.

In order to avoid the dissemination of those substances in our environment and to diminish the pressure on the natural resources, we encourage you to use the appropriate take-back systems for product disposal. Those systems will reuse or recycle most of the materials of the product you are disposing in a sound way.

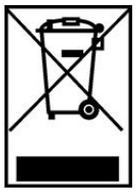
The crossed out wheeled bin symbol informs you that the product should not be disposed of along with municipal waste and invites you to use the appropriate separate take-back systems for product disposal.

If you need more information on the collection, reuse, and recycling systems, please contact your local or regional waste administration.

You may also contact your supplier for more information on the environmental performance of this product.

Copyright © 2026
Cognex Corporation. All Rights Reserved.