COGNEX

Advanced machine vision made easy

In-Sight® 8900 Series

Reference Manual



2026 September 24

Revision: 26.2.1.2

Legal Notices

The software described in this documentation is provided "as is" and "as available," without warranty of any kind, express or implied, including but not limited to the warranties of merchantability, fitness for a particular purpose, and non-infringement. In no event shall Cognex Corporation and its global affiliates (collectively, “Cognex”) be liable for any claims, damages, or other liability arising from, out of, or in connection with the software or your use of the software.

Your use of this software is governed by the full terms and conditions of the Cognex Software License Agreement. For complete licensing details and legal terms, please visit https://www.cognex.com/terms-and-conditions.

The information in this document is subject to change without notice and should not be construed as a commitment by Cognex. Cognex is not responsible for any errors that may be present in either this document or the associated software.

Companies, names, and data used in examples herein are fictitious unless otherwise noted. No part of this document may be reproduced or transmitted in any form or by any means, electronic or mechanical, for any purpose, nor transferred to any other media or language without the written permission of Cognex Corporation.

Portions of the hardware and software provided by Cognex may be covered by one or more U.S. and foreign patents, as well as pending U.S. and foreign patents listed on the Cognex web site at: cognex.com/patents.

In the event of any inconsistency between the English language version of this documentation and any other language version, the English language version shall take precedence.

Copyright © 2026. Cognex Corporation. All Rights Reserved.

The following are registered U.S. trademarks of Cognex Corporation:

2DMAX, 3D LIGHTBURST TECHNOLOGY, ADVANTAGE, ALIGNPLUS, ASSEMBLYPLUS, COGNEX, COGNEX VISION FOR INDUSTRY, CVL, DATAMAN, DVT, EASYBUILDER, EDGE INTELLIGENCE, HOTBARS, IDMAX, IN-SIGHT, LIGHTBURST, MX, OMNIVIEW, PATFIND, PATFLEX, PATINSPECT, PATMAX, PATMAX REDLINE, PATQUICK, POWERGRID, QUICKSORT, ULTRALIGHT, VISION SOLUTIONS, VISIONPRO, VISIONVIEW

The following are trademarks of the Cognex Corporation:

1DMAX, 3D SYMBOLIC LIGHT, 3D-LOCATE, 3DMAX, ONEVISION, PINPOINT, RANGEMAX, SLX, VIDI, OCRMAX, INSPECTEDGE, VISION SOLUTIONS

Portions copyright © Microsoft Corporation. All rights reserved.

Portions copyright © MadCap Software, Inc. All rights reserved.

Other product and company trademarks identified herein are the trademarks of their respective owners.

Precautions

To reduce the risk of injury or equipment damage, observe the following precautions when you install the Cognex product:

- The vision system requires a UL or NTRL listed power supply with a 24 VDC output that meets the following rating requirements:
    - At least 24 V DC (+/- 10%) output connection using a UL or NTRL listed LPS or NEC Class 2 power supply

  Any other voltage creates a risk of fire or shock and can damage the components. Applicable national and local wiring standards and rules must be followed.
- This product is a machine vision sensor intended for industrial use in automated manufacturing or similar applications.
- The safety of any system incorporating this product is the responsibility of the assembler of the system.
- Do not install Cognex products where they are exposed to environmental hazards such as excessive heat, dust, moisture, humidity, impact, vibration, corrosive substances, flammable substances, or static electricity.
- Route cables and wires away from high-current wiring or high-voltage power sources to reduce the risk of damage or malfunction from the following causes: over-voltage, line noise, electrostatic discharge (ESD), power surges, or other irregularities in the power supply.
- Do not expose the image sensor to laser light. Image sensors can be damaged by direct, or reflected, laser light. If your application requires laser light that might strike the image sensor, use a lens filter at the corresponding laser wavelength. For suggestions, contact your local integrator or application engineer.
- This product does not contain user-serviceable parts. Do not make electrical or mechanical modifications to product components. Unauthorized modifications can void your warranty.
- Changes or modifications not expressly approved by the party responsible for regulatory compliance could void the user's authority to operate the equipment.
- Include service loops with cable connections.
- Ensure that the cable bend radius begins at least six inches from the connector. Cable shielding can be degraded or cables can be damaged or wear out faster if a service loop or bend radius is tighter than 10X the cable diameter.
- This device should be used in accordance with the instructions in this manual.
- All specifications are for reference purposes only and can change without notice.

Symbols

The following symbols indicate safety precautions and supplemental information:

WARNING: This symbol indicates a hazard that could cause death, serious personal injury or electrical shock.

CAUTION: This symbol indicates a hazard that could result in property damage.

Note: This symbol indicates additional information about a subject.

Tip: This symbol indicates suggestions and shortcuts that might not otherwise be apparent.

Table of Contents

Legal Notices ... 2
Precautions ... 3
Symbols ... 4
Table of Contents ... 5
Getting Started ... 7
About the In-Sight 8900 Series ... 7
Accessories ... 8
Lenses ... 8
Mounting Brackets ... 9
Cables ... 10
Setting Up Your In-Sight Vision System ... 11
Vision System Layout ... 11
Dimensions ... 12
In-Sight 8900 Vision System Only ... 12
In-Sight 8900 with High Speed Liquid Lens Connector ... 13
In-Sight 8900 with High Speed Liquid Lens Installed ... 14
Reading Distance and Field of View ... 15
In-Sight 8900 with 0.5 MP Sensor ... 15
In-Sight 8900 with 2 MP Sensor ... 18
In-Sight 8900 with 5 MP Sensor ... 21
In-Sight 8900 with 12 MP Sensor ... 24
Install the Mounting Bracket ... 27
Connecting the Ethernet Cable ... 28
Connecting the Power and I/O Breakout Cable ... 29
LED Indicators ... 29
Using Your In-Sight Vision System ... 30
Installing In-Sight Vision Suite ... 30
Trigger Types ... 31
External Triggers ... 32
Industrial Protocols ... 33
Specifications ... 34
In-Sight 8900 Series Vision System ... 34
In-Sight 8900 Series Vision System Image Sensor ... 35
Spectral Response Curves ... 36
Acquisition Trigger Input ... 38
High-Speed Outputs ... 39
High Speed Output Wiring ... 40
Ethernet Cable ... 41
Breakout Cable ... 41
Cleaning and Maintenance ... 43
Clean the Housing ... 43
Clean the Vision System Image Sensor Window ... 43

Clean the Vision System Lens Cover 43
Regulations and Conformity **44**
中国大陆RoHS (Information for China RoHS Compliance) 45
For European Community Users 45

Getting Started

This section provides general information about the In-Sight 8900 series vision system and the accessories and systems.

About the In-Sight 8900 Series



The In-Sight 8900 series vision systems are high-performance, small form factor vision systems with global shutter. In-Sight 8900 vision systems offer:

- Fast acquisition
- High performance
- Full In-Sight Vision Suite support
- Edge Learning tool support

Accessories

You can purchase the following components separately. For a list of options and accessories, contact your local Cognex sales representative.

Lenses

Accessory	Product Number	Illustration	IS8900	IS8902	IS8905	IS8912
6 mm Moritex UR series lens	ML-M0625UR		✓	✓	✓	
8 mm Moritex UR series lens	ML-M0822UR					
12 mm Moritex UR series lens	ML-M1218UR					
16 mm Moritex UR series lens	ML-M1616UR					
25 mm Moritex UR series lens	ML-M2516UR					
35 mm Moritex UR series lens	ML-M3520UR					
50 mm Moritex UR series lens	ML-M5025UR					
16 mm HSLL - high resolution	CLN-C16F65-HSLL-HR		✓	✓	✓	✓
25 mm HSLL - high resolution	CLN-C25F65-HSLL-HR					
35 mm HSLL - high resolution	CLN-C35F06-HSLL-HR					
6 mm Moritex SR series lens	ML-U0618SR-18C					✓
8 mm Moritex SR series lens	ML-U0817SR-18C					
12 mm Moritex SR series lens	ML-U1217SR-18C					
16 mm Moritex SR series lens	ML-U1615SR-18C					
25 mm Moritex SR series lens	ML-U2515SR-18C					
35 mm Moritex SR series lens	ML-U3518SR-18C					
50 mm Moritex SR series lens	ML-U5022SR-18C					

Note: Moritex lenses previously had the prefix LMC in the product number (for example ML-M0625UR was previously named LMC-ML-M0625UR). If you purchased a Moritex lens under the previous product number, you can still refer to this compatibility table using the product number without the LMC prefix.

Mounting Brackets

Accessory	Product Number	Illustration
Mounting Bracket	BKT-IS8K-01	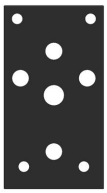

Cables

Note: Cables are sold separately.

Accessory	Product Number	Illustration
Ethernet Cable, X-coded M12-8 to RJ-45	CCB-84901-2001-xx (straight, xx specifies length: 2m, 5m, 10m, 15m, 30m)	
Ethernet Cable, Robotic X-Coded M12-8 to RJ-45	CCB-84901-2RBT-xx (straight, xx specifies length: 2m, 5m, 10m)	
Breakout cable, M8-8 Flying Lead Cable	CCB-PWRIOM8-S-xx (xx specifies length: 2m, 5m, 10m, 15m)	
Breakout cable, M8-8 Flying Lead Right Angle Cable	CCB-PWRIOM8-R-xx (xx specifies length: 5m, 10m)	
M8-5 to M8-8 Adapter Cable	CCB-M8CONVTR	

Setting Up Your In-Sight Vision System

Read this section to learn how the vision system connects to its standard components and accessories.

Vision System Layout

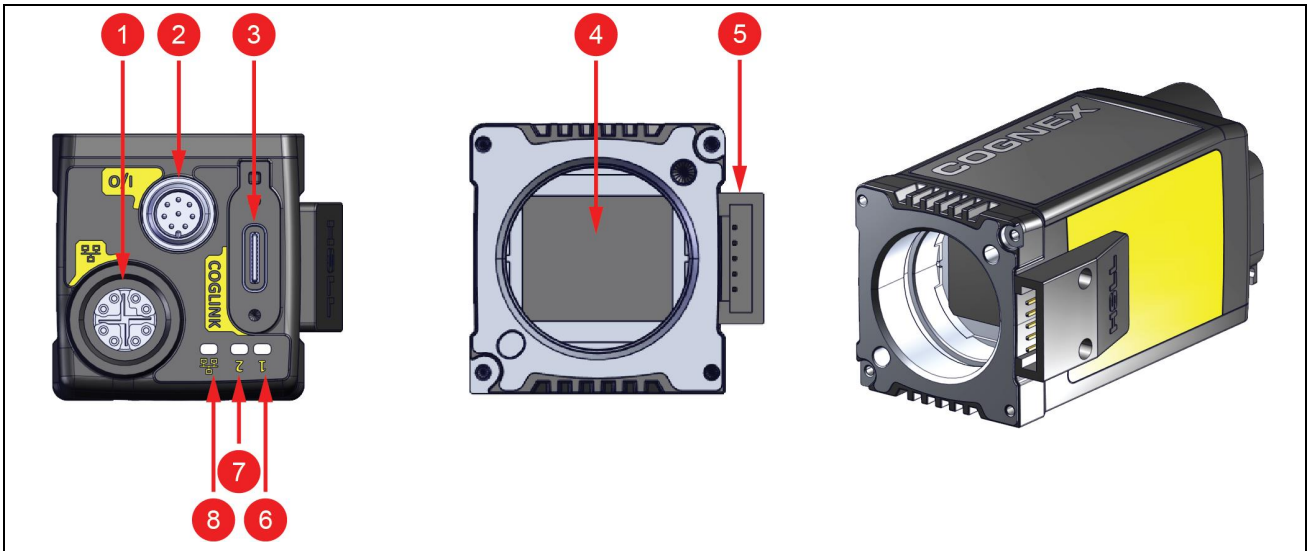

Number	Description
1	Ethernet connector
2	M8x8 Power I/O Breakout cable connector
3	Coglink/USB-C connector
4	Imager/C-mount flange
5	High Speed Liquid Lens connector (optional configuration)
6	LED 1
7	LED 2
8	Ethernet status indicator

Dimensions

The following sections list dimensions of the vision system.

Note:

- Dimensions are in millimeters [inches] and are for reference purposes only.
- All specifications are for reference purposes only and can change without notice.

In-Sight 8900 Vision System Only

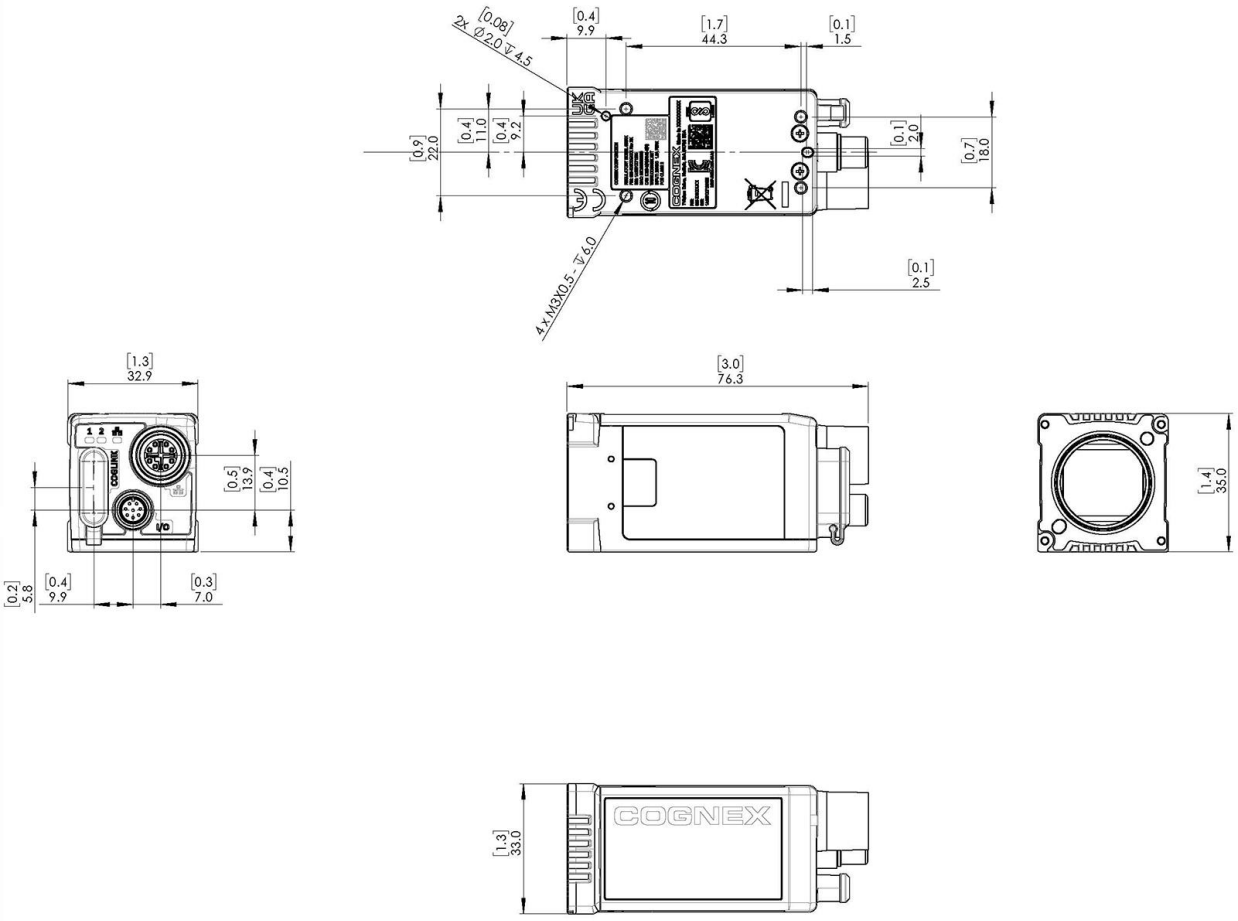

In-Sight 8900 with High Speed Liquid Lens Connector

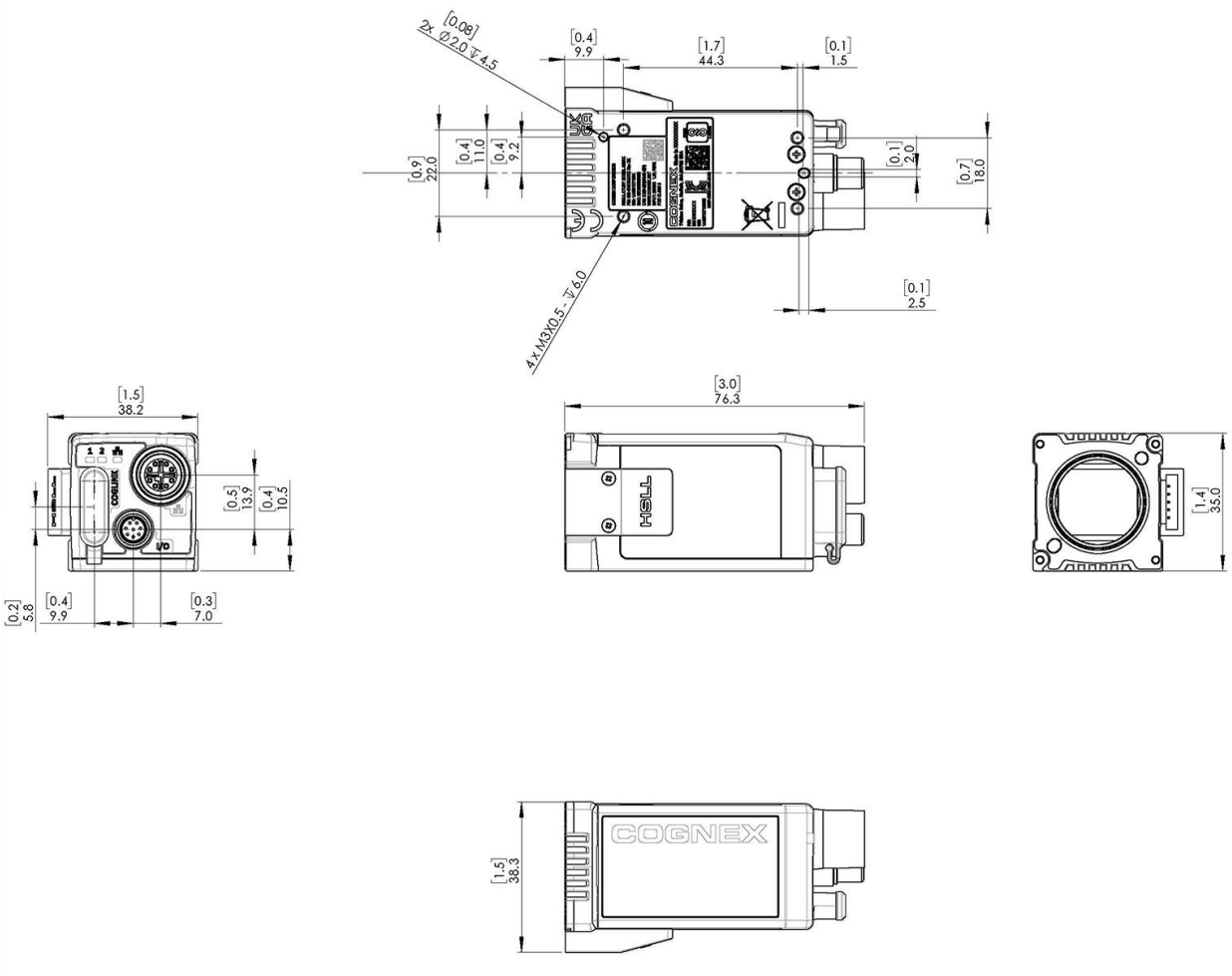

In-Sight 8900 with High Speed Liquid Lens Installed

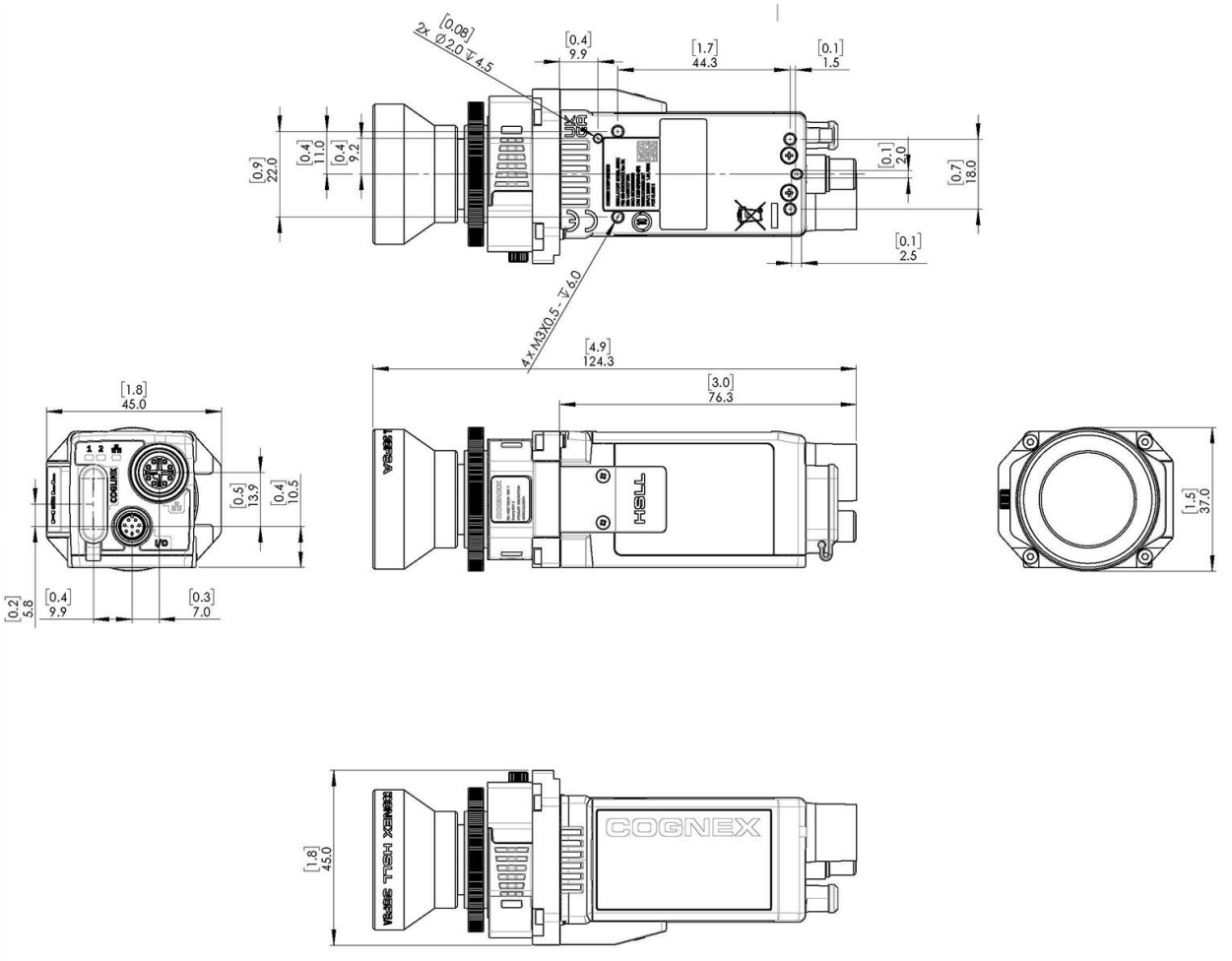

Reading Distance and Field of View

This section provides the Field of View (FoV) values for the various In-Sight 8900 image sensors.

In-Sight 8900 with 0.5 MP Sensor

16 mm Focal Length:

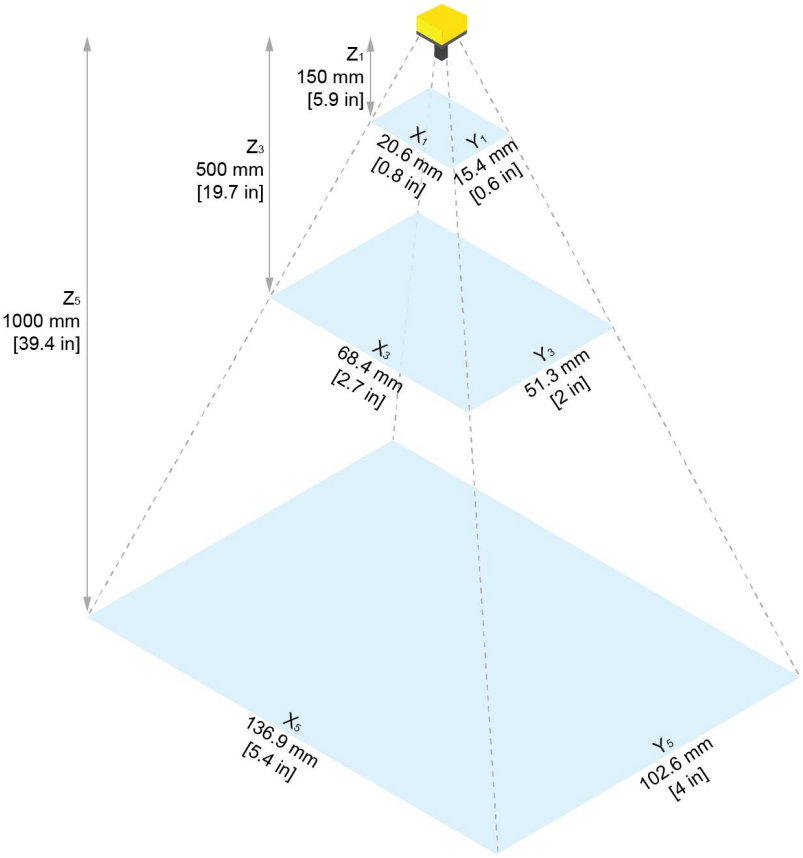

Working Distance	Horizontal Values	Vertical Values	Diagonal Values
150 mm [5.9 in]	20.6 mm [0.8 in]	15.4 mm [0.6 in]	25.7 mm [1 in]
500 mm [19.7 in]	68.4 mm [2.7 in]	51.3 mm [2 in]	85.5 mm [3.4 in]
1000 mm [39.4 in]	136.9 mm [5.4 in]	102.6 mm [4 in]	171.1 mm [6.7 in]

25 mm Focal Length:

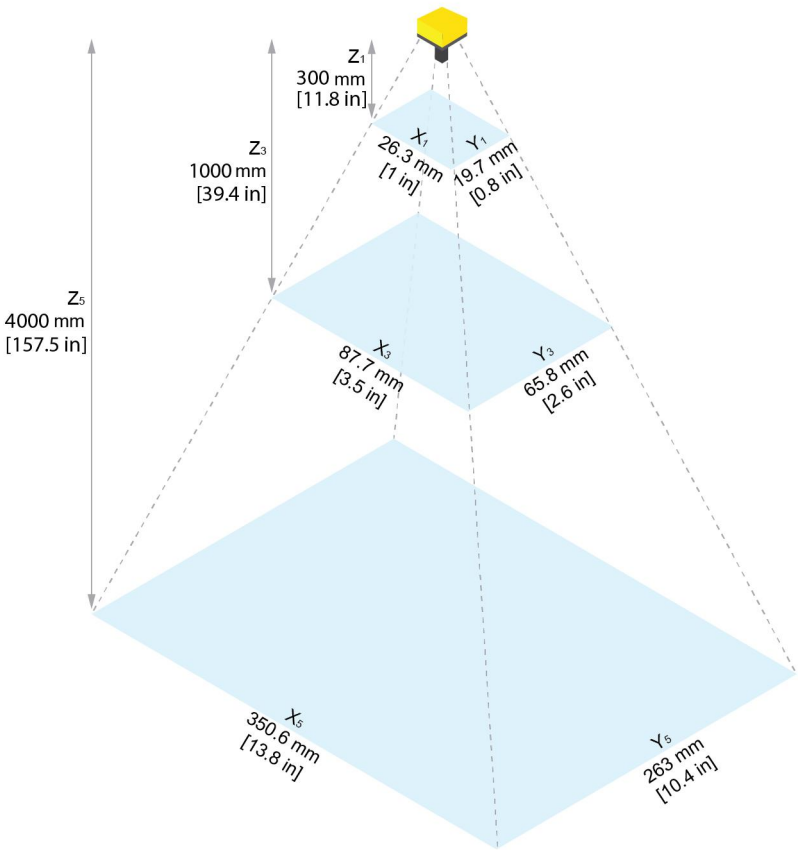

Working Distance	Horizontal Values	Vertical Values	Diagonal Values
300 mm [11.8 in]	26.3 mm [1 in]	19.7 mm [0.8 in]	32.8 mm [1.3 in]
1000 mm [39.4 in]	87.7 mm [3.5 in]	65.8 mm [2.6 in]	109.6 mm [4.3 in]
4000 mm [157.5 in]	350.6 mm [13.8 in]	263 mm [10.4 in]	438.3 mm [19 in]

35 mm Focal Length:

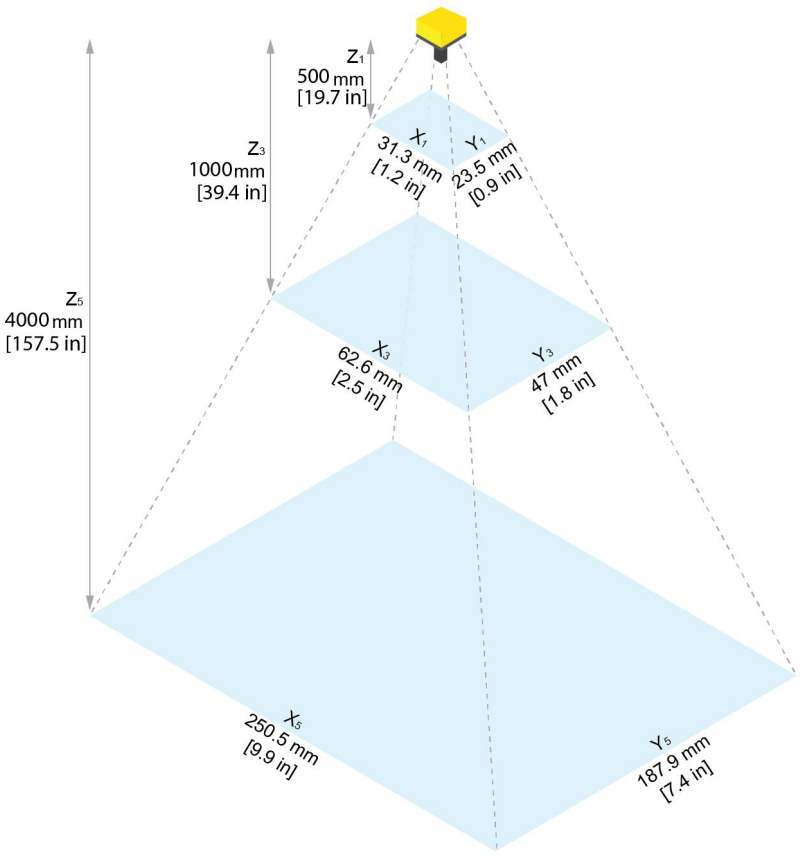

Working Distance	Horizontal Values	Vertical Values	Diagonal Values
500 mm [19.7 in]	31.3 mm [1.2 in]	23.5 mm [0.9 in]	39.1 mm [1.5 in]
1000 mm [39.4 in]	62.6 mm [2.5 in]	47 mm [1.8 in]	78.3 mm [3.1 in]
4000 mm [157.5 in]	250.5 mm [9.9 in]	187.9 mm [7.4 in]	313.1 mm [12.3 in]

In-Sight 8900 with 2 MP Sensor

16 mm Focal Length:

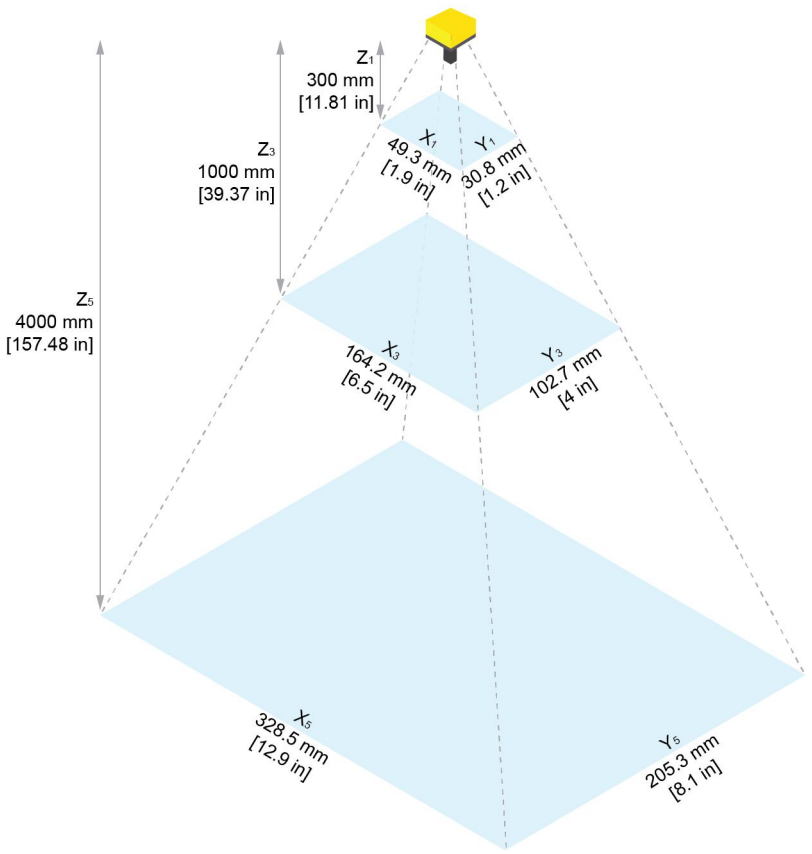

Working Distance	Horizontal Values	Vertical Values	Diagonal Values
150 mm [5.9 in]	49.3 mm [1.9 in]	30.8 mm [1.2 in]	58.1 mm [2.3 in]
500 mm [19.7 in]	164.2 mm [6.5 in]	102.7 mm [4 in]	193.7 mm [7.6 in]
1000 mm [39.4 in]	328.5 mm [12.9 in]	205.3 mm [8.1 in]	387.4 mm [15.3 in]

25 mm Focal Length:

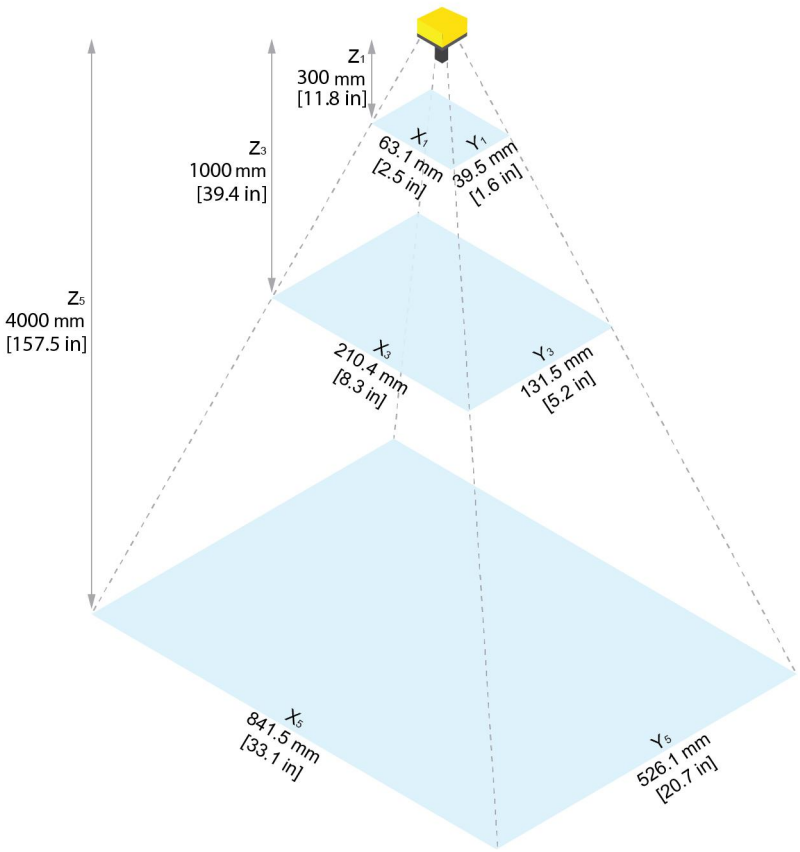

Working Distance	Horizontal Values	Vertical Values	Diagonal Values
300 mm [11.8 in]	63.1 mm [2.5 in]	39.5 mm [1.6 in]	74.4 mm [2-9 in]
1000 mm [39.4 in]	210.4 mm [8.3 in]	131.5 mm [5.2 in]	248.1 mm [9.8 in]
4000 mm [157.5 in]	841.5 mm [33.1 in]	526.1 mm [20.7 in]	992.4 mm [39 in]

35 mm Focal Length:

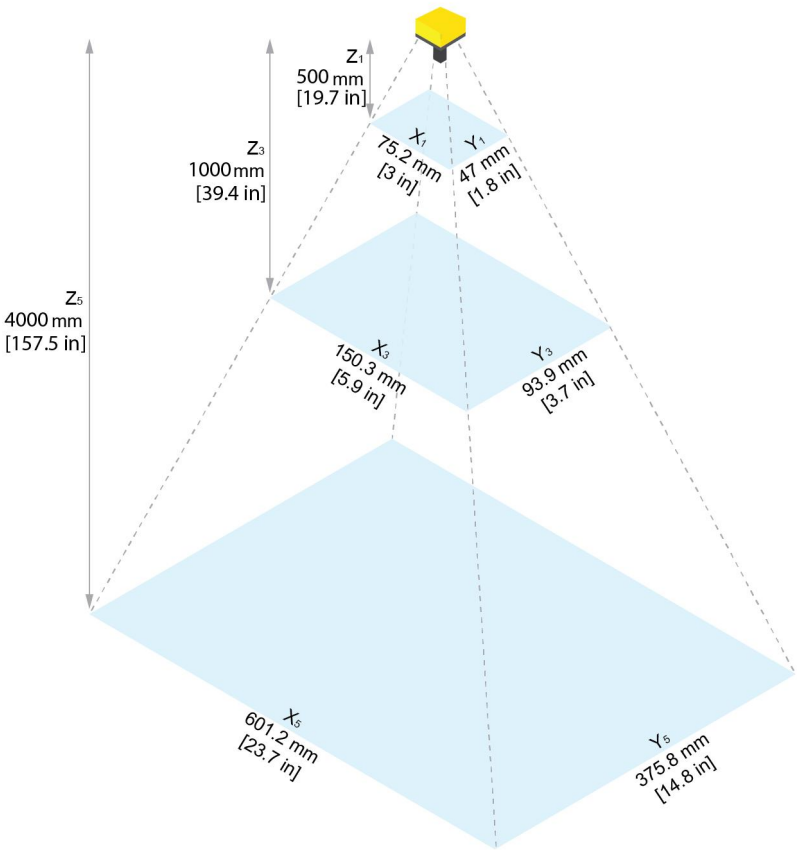

Working Distance	Horizontal Values	Vertical Values	Diagonal Values
500 mm [19.7 in]	75.2 mm [3 in]	47 mm [1.8 in]	88.7 mm [3.5 in]
1000 mm [39.4 in]	150.3 mm [5.9 in]	93.9 mm [3.7 in]	177.2 mm [7 in]
4000 mm [157.5 in]	601.2 mm [23.7 in]	375.8 mm [14.9 in]	709 mm [27.9 in]

In-Sight 8900 with 5 MP Sensor

16 mm Focal Length:

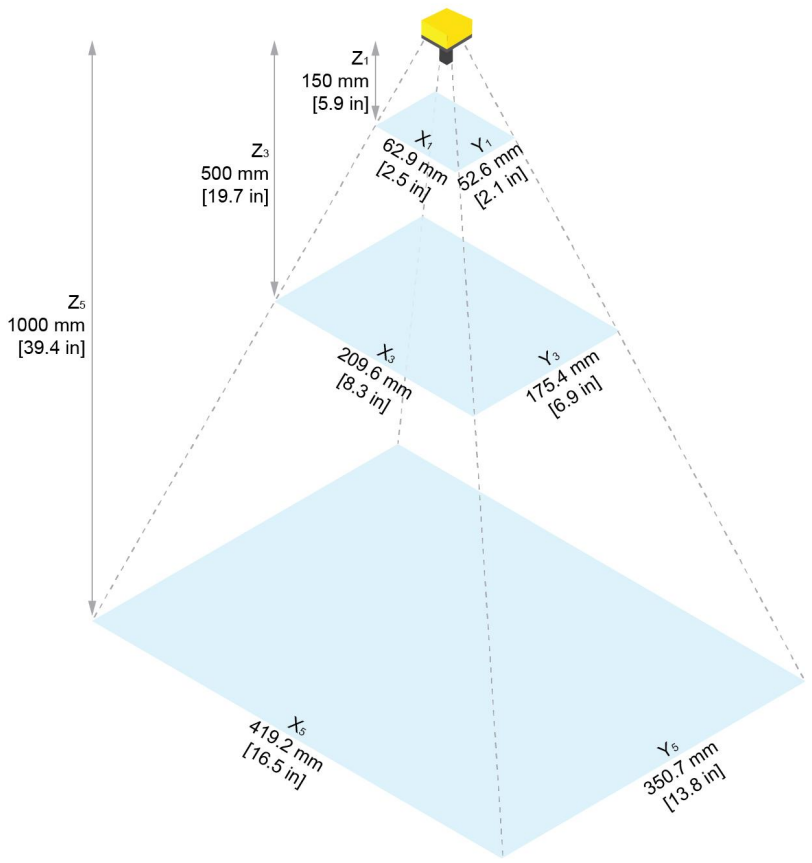

Working Distance	Horizontal Values	Vertical Values	Diagonal Values
150 mm [5.9 in]	62.9 mm [2.5 in]	52.6 mm [2.1 in]	82 mm [3.2 in]
500 mm [19.7 in]	209.6 mm [8.3 in]	175.4 mm [6.9 in]	273.3 mm [10.8 in]
1000 mm [39.4 in]	419.2 mm [16.5 in]	350.7 mm [13.8 in]	546.6 mm [21.5 in]

25 mm Focal Length:

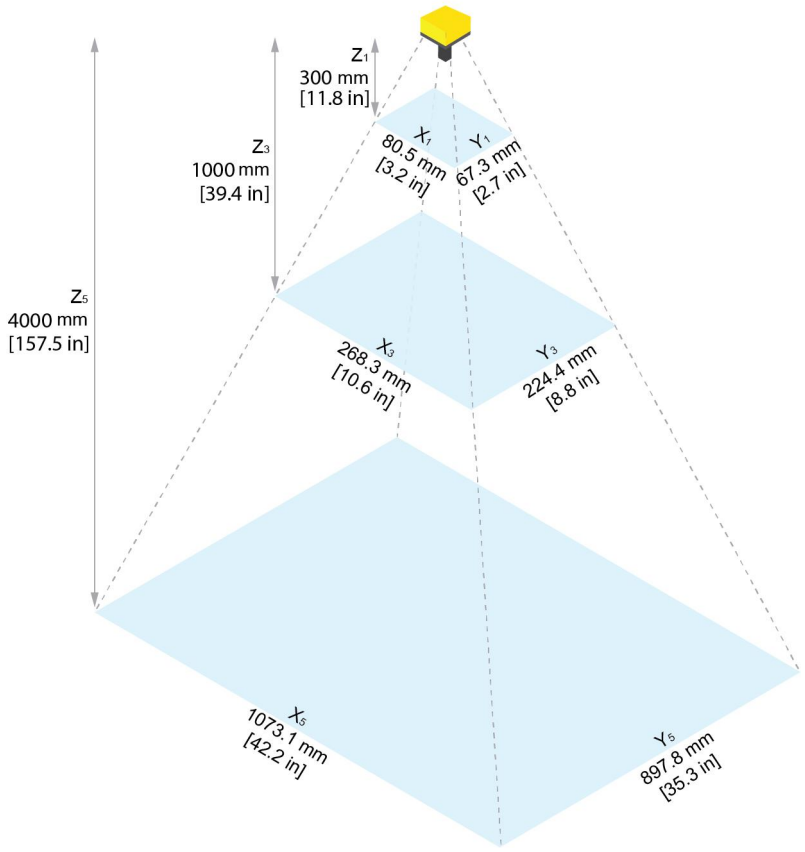

Working Distance	Horizontal Values	Vertical Values	Diagonal Values
300 mm [11.8 in]	80.5 mm [3.2 in]	67.3 mm [2.7 in]	104.9 mm [4.1 in]
1000 mm [39.4 in]	268.3 mm [10.6 in]	224.4 mm [8.8 in]	349.8 mm [13.8 in]
4000 mm [157.5 in]	1073.1 mm [42.2 in]	897.8 mm [35.3 in]	1399.1 mm [55.1 in]

35 mm Focal Length:

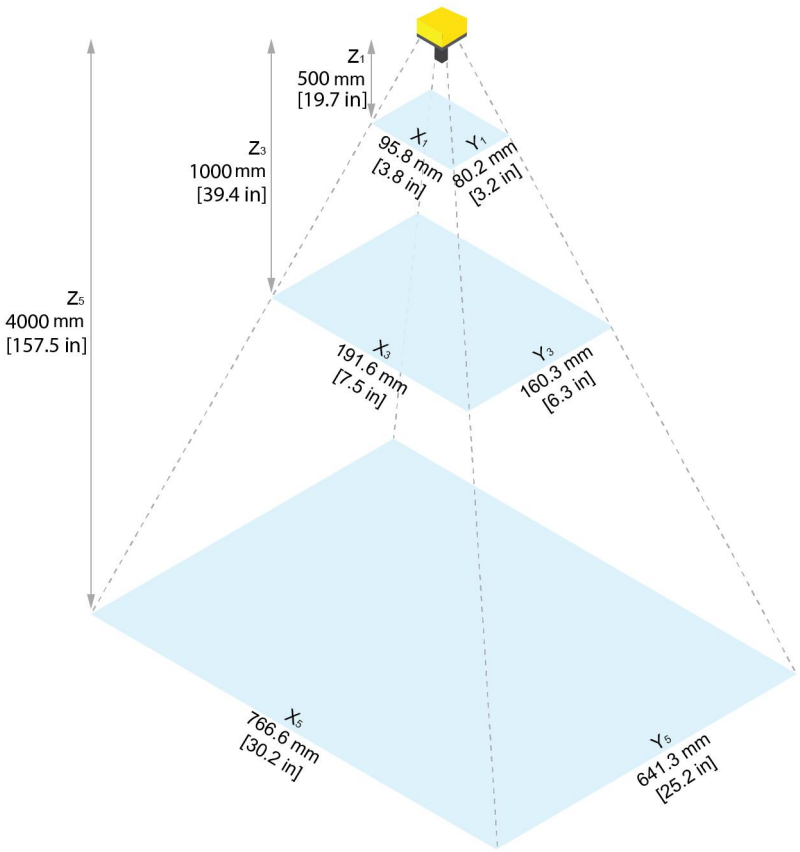

Working Distance	Horizontal Values	Vertical Values	Diagonal Values
500 mm [19.7 in]	95.8 mm [3.8 in]	80.2 mm [3.2 in]	124.9 mm [4.9 in]
1000 mm [39.4 in]	191.6 mm [7.5 in]	160.3 mm [6.3 in]	249.8 mm [9.8 in]
4000 mm [157.5 in]	766.6 mm [30.2 in]	641.3 mm [25.2 in]	999.5 mm [39.4 in]

In-Sight 8900 with 12 MP Sensor

16 mm Focal Length:

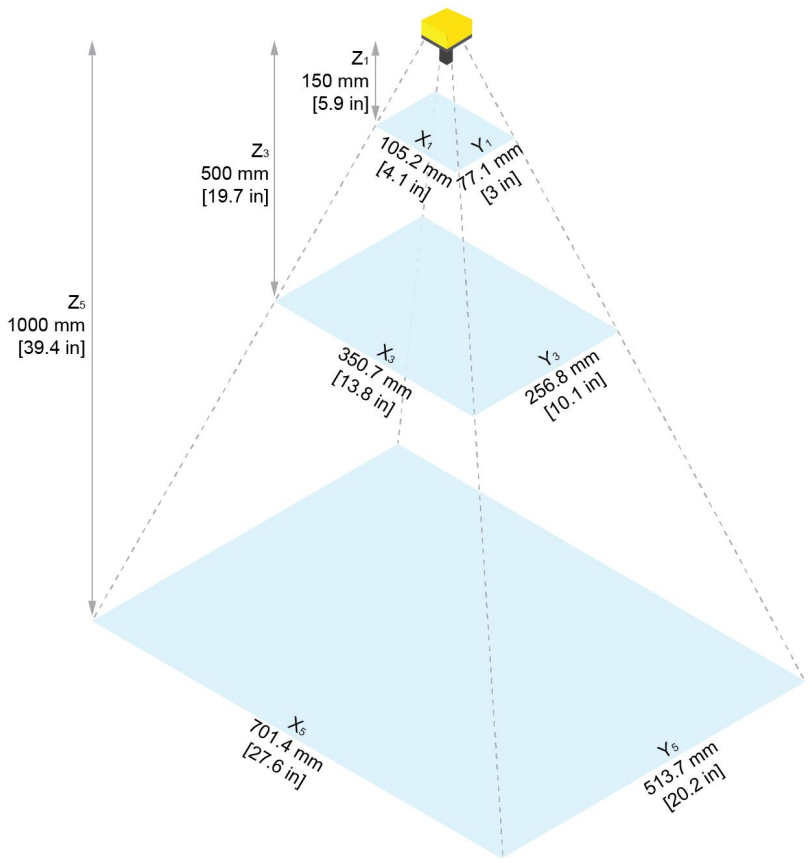

Working Distance	Horizontal Values	Vertical Values	Diagonal Values
150 mm [5.9 in]	105.2 mm [4.1 in]	77.1 mm [3 in]	130.4 mm [5.1 in]
500 mm [19.7 in]	350.7 mm [13.8 in]	256.8 mm [10.1 in]	434.7 mm [17.1 in]
1000 mm [39.4 in]	701.4 mm [27.6 in]	513.7 mm [20.2 in]	869.4 mm [34.2 in]

25 mm Focal Length:

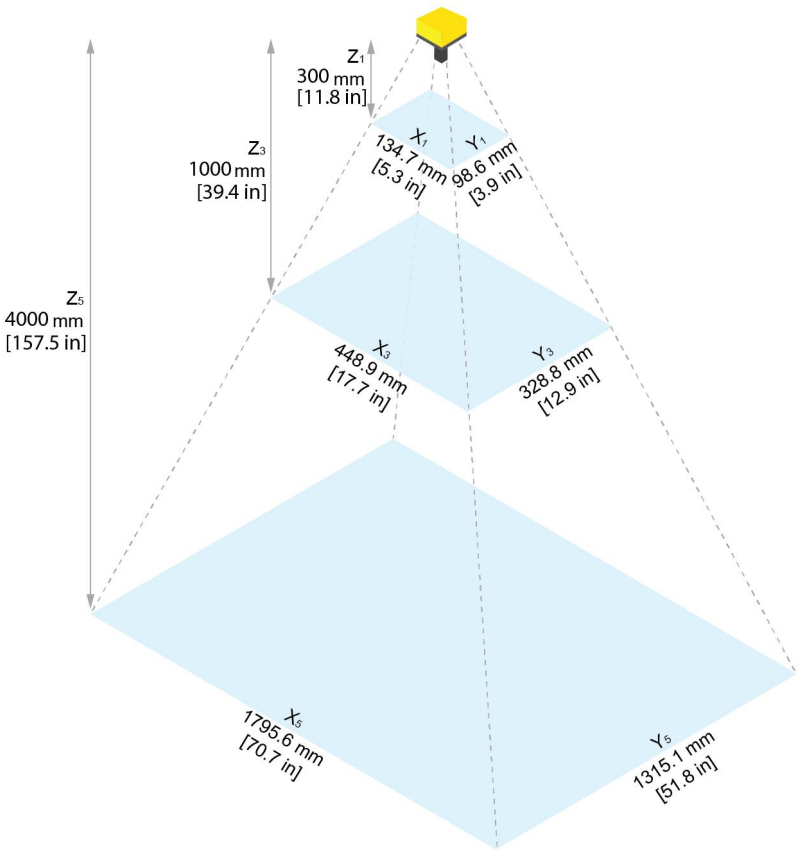

Working Distance	Horizontal Values	Vertical Values	Diagonal Values
300 mm [11.8 in]	134.7 mm [5.3 in]	98.6 mm [3.9 in]	166.9 mm [6.6 in]
1000 mm [39.4 in]	448.9 mm [17.7 in]	328.8 mm [12.9 in]	556.4 mm [22 in]
4000 mm [157.5 in]	1795.6 mm [70.7 in]	1315.1 mm [51.8 in]	2225.7 mm [87.6 in]

35 mm Focal Length:

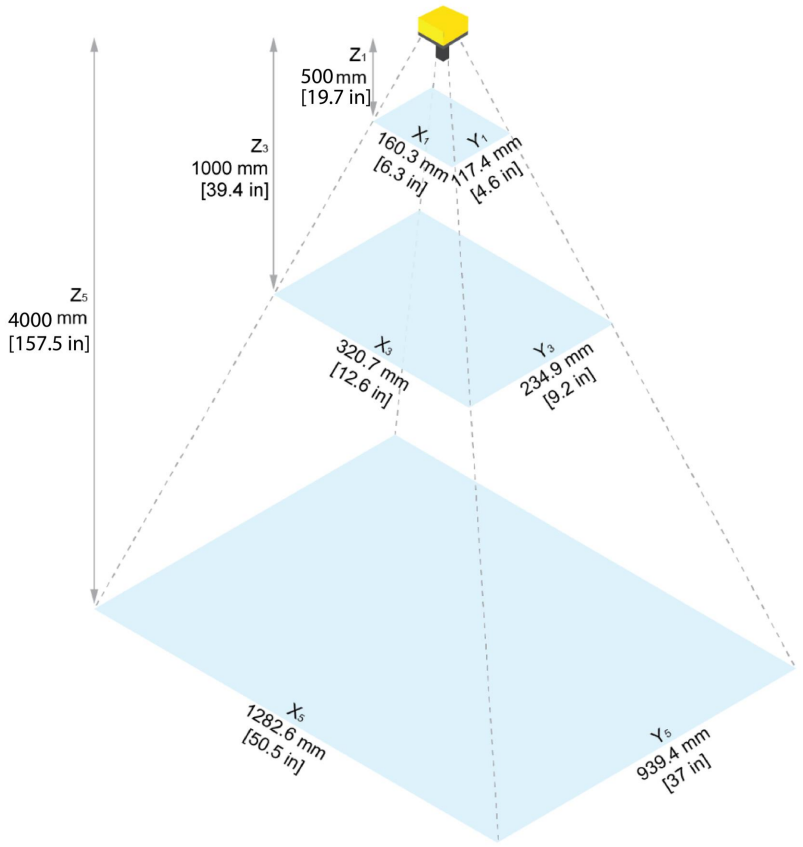

Working Distance	Horizontal Values	Vertical Values	Diagonal Values
500 mm [19.7 in]	160.3 mm [6.3 in]	117.4 mm [4.6 in]	198.7 mm [7.8 in]
1000 mm [39.4 in]	320.7 mm [12.6 in]	234.9 mm [9.2 in]	397.6 mm [15.7 in]
4000 mm [157.5 in]	1282.6 mm [50.5 in]	939.4 mm [37 in]	1589.8 mm [62.6 in]

Install the Mounting Bracket

The vision system provides mounting holes for attachment to a mounting surface.

CAUTION: You must ground the vision system, either by mounting the vision system to a fixture that is electrically grounded or by attaching a wire from the mounting fixture on the vision system to frame ground or earth ground. If you use a ground wire, attach the wire to one of the four mounting points on the back plate of the vision system and not to the mounting points on the front of the vision system.

Note: If using the 1/4-20 or M6 mounting holes, the thread length of the screw cannot exceed 8 mm.

1. Align the holes on the mounting surface with the mounting holes on the vision system.
2. Insert the M3 screws into the mounting holes and tighten using a 2.5 mm hex wrench. The maximum torque is 0.3 Nm (2.5 in-lb).

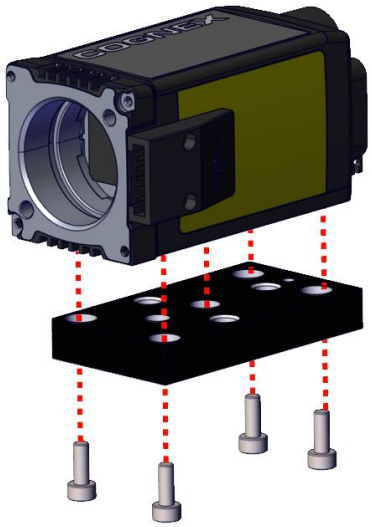

Connecting the Ethernet Cable

CAUTION: The Ethernet cable shield must be grounded at the far end.Whatever this cable is plugged into (typically a switch or router) should have a grounded Ethernet connector. A digital voltmeter should be used to validate the grounding. If the far end device is not grounded, a ground wire should be added in compliance with local electrical codes.

1. Connect the M12 connector of the Ethernet cable to the vision system ENET connector.
2. Connect the RJ-45 connector of the Ethernet cable to a switch/router or PC, as applicable.

Note: Make sure that the vision system is connected only to internal Ethernet networks without exiting a facility and being subjected to TNVs.

Connecting the Power and I/O Breakout Cable

⚠ **CAUTION**: To reduce emissions, connect the far end of the Breakout cable shield to frame ground.

ⓘ **Note**:
- Perform wiring or adjustments to I/O devices when the vision system is not receiving power.
- You can clip unused wires short or use a tie made of non-conductive material to tie them back. Keep bare wires separated from the +24 V DC wire.

1. Verify that the 24 V DC power supply is unplugged and not receiving power.
2. Attach the +24 V DC connector of the Power and I/O Breakout cable and Ground wires to the corresponding terminals on the power supply. For more information, see *Specifications* on page 34.

   ⚠ **CAUTION**: Never connect voltages other than 24 V DC. Always observe the polarity shown.
3. Attach the M8 connector of the Power and I/O Breakout Cable to the 24 V DC connector of the vision system.
4. Restore power to the 24 V DC power supply and turn it on if necessary.

LED Indicators

The following table describes the LEDs of the vision system.

Indicator	Description
ENET LED	The ENET LED blinks when the vision system detects network traffic. The color of the LED depends on the network bandwidth: • 1000-BaseT: GREEN • 100-BaseT: ORANGE • 10-BaseT: RED
LED 1	The LED is GREEN when active. In-Sight Vision Suite refers to this LED as ReadLED. You can configure the LED behavior from the Discrete I/O Settings dialog, using Output Line 2.
LED 2	The LED is RED when active. In-Sight Vision Suite refers to this LED as ErrorLED. You can configure the LED behavior from the Discrete I/O Settings dialog, using Output Line 3.

ⓘ **Note**: If both LED 1 and LED 2 are solid RED, the firmware update of the vision system failed.

Using Your In-Sight Vision System

This section provides information on the installation of the In-Sight Vision Suite, troubleshooting connection issues, tuning, image filtering, as well as vision system training and package detection.

Installing In-Sight Vision Suite

Follow the steps below to install and connect your vision system to the In-Sight Vision Suite.

1. Download the latest version of In-Sight from support.cognex.com/ and follow the on-screen steps.
2. Connect the 8900 series vision system to your PC.
3. Launch In-Sight Vision Suite and click **Refresh**.
4. Select a vision system from the list and click **Connect**.

Trigger Types

The In-Sight 8900 vision systems support the following trigger modes:

- **Single** (external trigger): Acquires a single image and runs the current job on the acquired image. The vision system relies on an external trigger source.
- **Self**: At a time interval you configure, the vision system acquires an image and runs the job continuously.

External Triggers

If you are using external triggering, you can use any of the following methods to trigger your vision system.

- Send a pulse on the I/O cable.
    - Trigger +
    - Trigger -
- Send a trigger command over Native Mode.
- Press **F5** on the keyboard while the In-Sight Vision Suite has the input focus.
- Click the **Trigger** button in the In-Sight Vision Suite.

Industrial Protocols

The vision system supports the following industrial protocols:

- EtherNet/IP™, EDS and PLC
- PROFINET (Class B)
- SLMP Protocol
- TCP/IP
- OPC/UA
- SFTP

For more information, see **Industrial Communications** in the *In-Sight Spreadsheet Help* documentation.

Specifications

The following sections list general specifications for the vision system.

In-Sight 8900 Series Vision System

Specification	Model
Memory	4 GB
Lens Type	C-Mount or Cognex High Speed Liquid Lens
Discrete Inputs	One opto-isolated, general purpose input
Discrete Outputs	Two opto-isolated, high speed outputs
Status LEDs	Network LED and two configurable LEDs
High Speed Liquid Lens Lifespan	1800 M focus cycles
Job/Program Memory	7.5 GB
Image Processing Memory	Dynamic allocation shared with Job/Program Memory
Network Communication	One Ethernet port, 10/100/1000 BaseT with auto MDIX IEEE 802.3 TCP/IP Protocol Supports DHCP, static, and link-local address configuration.
Communication Protocols	TCP/IP, PROFINET, EtherNet/IP, SLMP, ModbusTCP, (S)FTP
Power Consumption	External LPS or NEC Class 2 power supply: 24 V DC ± 10% Class 3 Power over Ethernet (PoE) USB-C power 1.5 A maximum
Current and Voltage	24 V input: 24 V DC, 1.5 A peak, 250 mA average Power over Ethernet: Class 3 as per 802.3af, 37-57 V DC, 350 mA maximum USB-C : 5 V DC, 1.5A maximum
Material	Die-cast aluminum and zinc housing
Finish	Painted
Mounting	Four M3 threaded mounting holes. Pattern: 44.25 mm (1.74 in) length, 22 mm (0.87 in) width side 1, 18 mm (0.71 in) width side 2.
Weight	In-Sight 8900 with no accessories attached: 205 g (7.2 oz). With High Speed Liquid Lens (25 mm): 320 g (11.3 oz).

Specification	Model
Ambient Operating Temperature	0° C to 40° C (32° F to 104° F) **Note**: Use the GetTemperature function to verify that the temperature of various components is in a safe operating range. Cognex recommends the temperature not exceed 70° C (158° F) for any component. ⓘ You might need additional cooling measures to keep the vision system at a safe operating temperature. Examples of cooling measures include: • Mount the vision system to a heat sink using the M3 mounting screws. • Use the air-cooled bracket. • Reduce the ambient temperature and ensure there is air flow over the vision system.
Storage Temperature	-20° C to 80° C (-4° F to 176° F)
Humidity	<95% non-condensing
Protection	IP40 with all cables properly attached and lens properly attached
Shock (Shipping and Storage)	IEC 60068-2-27: 18 shocks (3 shocks in each polarity in each (X, Y, Z) axis) 80 Gs (800 m/s2 at 11 ms, half-sinusoidal) with cables or cable plugs and a 150 gram or lighter lens attached.
Vibration (Shipping and Storage)	IEC 60068-2-6: vibration test in each of the three main axis for 2 hours at 10 Gs (10 to 500 Hz at 100 m/s2 / 15 mm) with cables or cable plugs and a 150 gram or lighter lens attached.
Regulations and Conformity	CE, FCC, KCC, EU RoHS, China RoHS
LIN	Compatible with the LIN 2.0, LIN 2.1, LIN 2.2, LIN 2.2A and O/DIS 17987-4.2 standards. Transmit data rate upto 20kbps

In-Sight 8900 Series Vision System Image Sensor

Specification	In-Sight 8900M	In-Sight 8900C	In-Sight 8902M	In-Sight 8902C	In-Sight 8905M	In-Sight 8905C	In-Sight 8912M	In-Sight 8912C
Bit Depth	8-bit monochrome	24-bit color	8-bit monochrome	24-bit color	8-bit monochrome	24-bit color	8-bit monochrome	24-bit color
Frames Per Second (Maximum, Full Resolution)	142	100	86	49	47	29	21	10
Image Sensor Type	CMOS, global shutter							
Image Sensor Properties	2.7 mm diagonal, 2.74 x 2.74 µm square pixels		6.2 mm diagonal, 2.74 x 2.74 µm square pixels		8.8 mm diagonal, 2.74 x 2.74 µm square pixels		14 mm diagonal, 2.74 x 2.74 µm square pixels	
Maximum Image Resolution (pixels)	800 x 600		1920 x 1200		2448 x 2048		4096 x 3000	
Electronic Shutter Speed	29.1 us to 200,000 us							

Spectral Response Curves

The following diagrams represent the response of the vision system to different wavelengths of light.

In-Sight 8900M, 8902M, and 8905M:

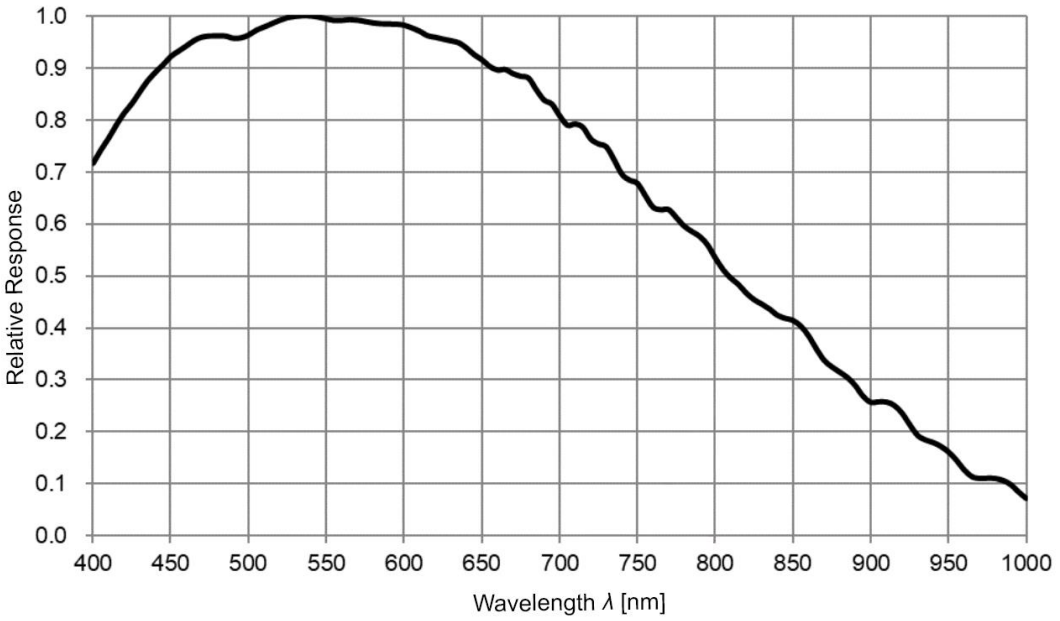

In-Sight 8900C, 8902C, and 8905C:

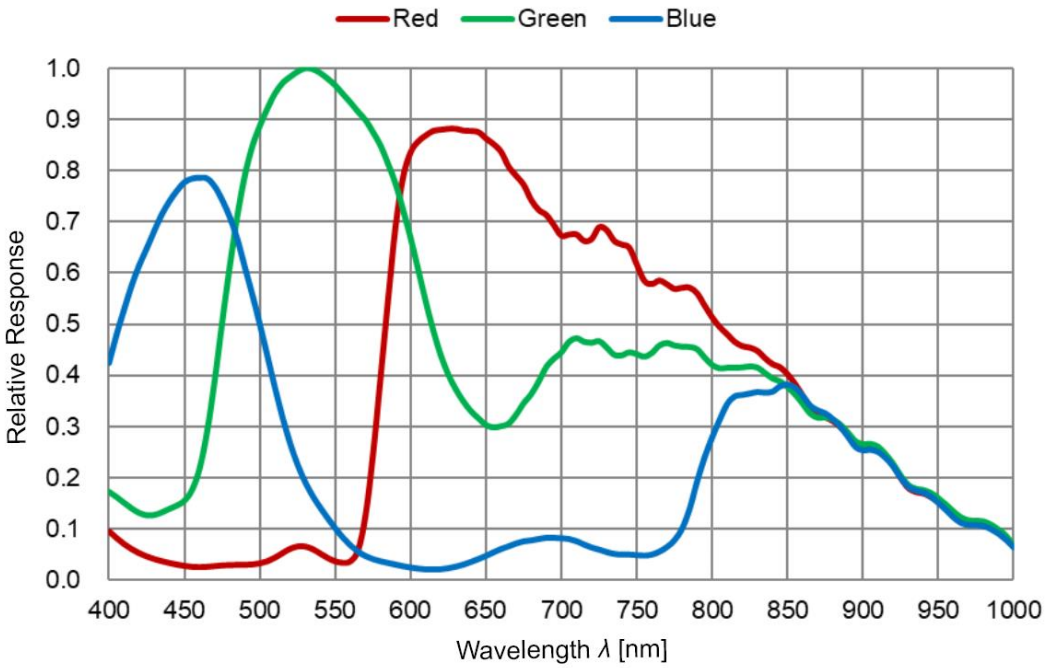

In-Sight 8912M:

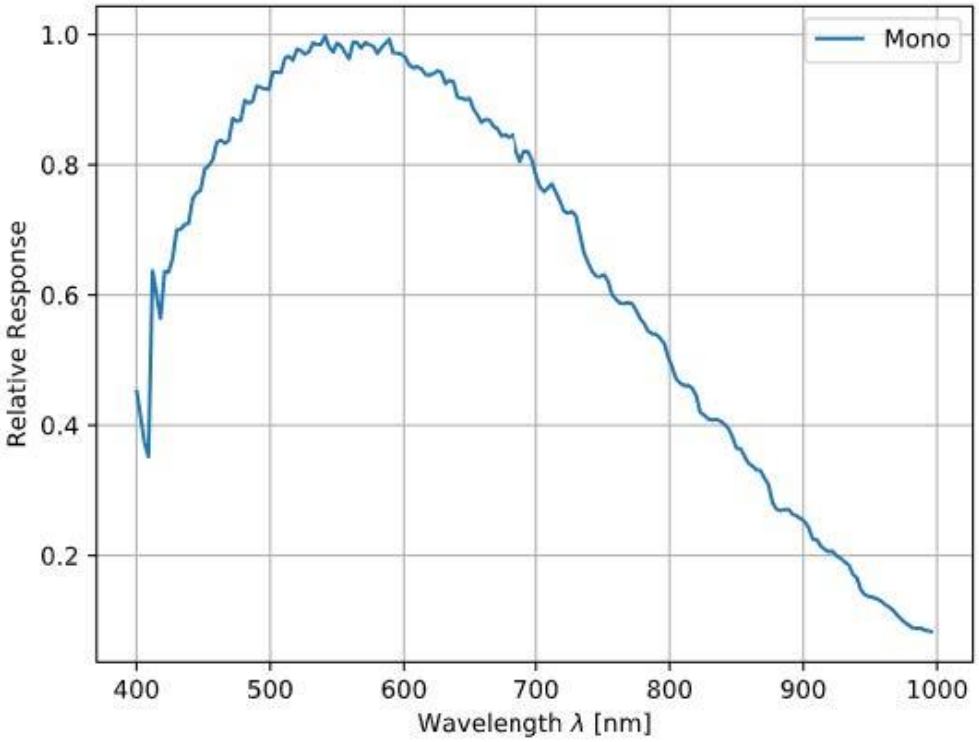

In-Sight 8912C:

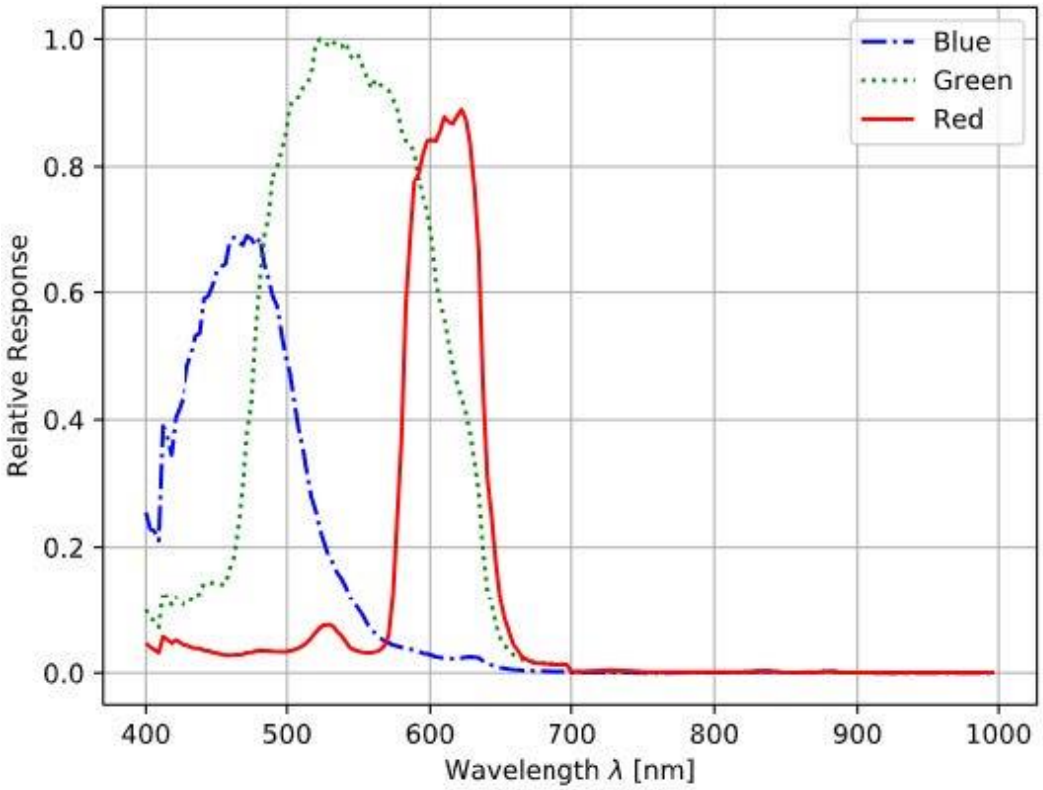

Acquisition Trigger Input

The vision system features one acquisition trigger input, which is optically isolated. You can configure the acquisition trigger input to trigger from an NPN (current sinking) or PNP (current sourcing) device.

Specification	Description
Voltage	ON: 15 to 28 V DC (24 DC nominal) OFF: 0 to 5 V DC (11.5 V DC nominal threshold)
Current (Typical)	ON: 2.6 mA to 4.9 mA from 15 to 28 V Input OFF: <830 µA for < 5 V DC Resistance: ~6 kOhms
Delay	24 µs maximum latency between leading edge of trigger and start of aquisition. Input pulse should be a minimum of 1 ms wide.

- To trigger from an NPN type photoelectric sensor or PLC output, connect COMMON IN to +24 VDC and connect IN 0 to the output of the photoelectric sensor. When the output turns ON, it pulls TRIGGER down to 0 VDC, turning the opto-coupler ON.
- To trigger from a PNP photoelectric sensor or PLC output, connect IN 0 to the output of the photoelectric sensor and connect COMMON IN to 0 VDC. When the output turns ON, it pulls TRIGGER up to +24 VDC, turning the opto-coupler ON.

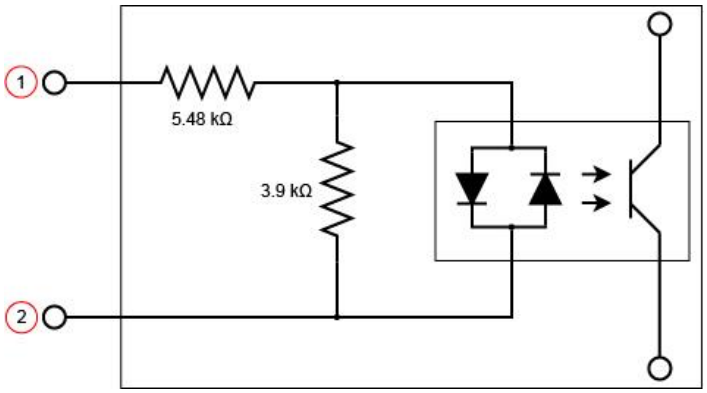

Number	Input
1	IN 0
2	COMMON IN

High-Speed Outputs

Specification	Description
Voltage	V_{MAX}: 26 VDC maximum through external load V_{OL}: ≤ ± 3 V @ 50 mA
Current	I_{MAX}: 50 mA maximum sink or source current
	OFF state leakage current: 100 µA maximum
	Each line is protected against over-current, short circuits and transients from switching inductive loads. High current inductive loads require an external protection diode.

For NPN lines, the external load should be connected between the output and the positive supply voltage (< 26 VDC). The output pulls down to less than 3 VDC when ON, which causes current to flow through the load. When the output is OFF, no current flows through the load.

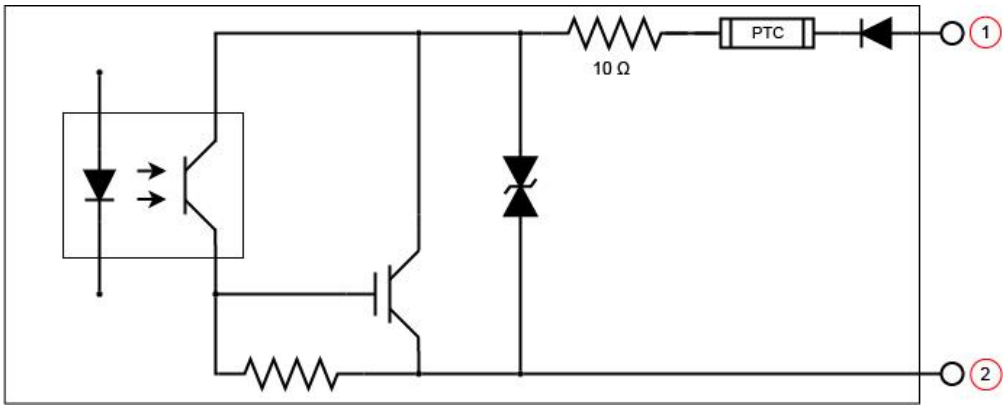

Number	Output
1	NPN OUT
2	COMMON OUT

For PNP lines, the external load should be connected between the output and the negative supply voltage (0 VDC). When connected to a 24 VDC power supply, the output pulls up greater than 21 VDC when ON, and current flows through the load. When the output is OFF, no current flows through the load.

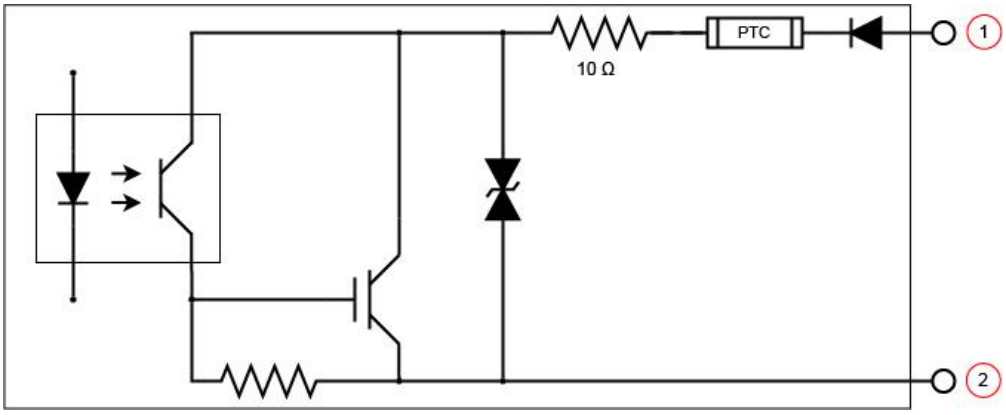

Number	Output
1	COMMON OUT
2	PNP OUT

High Speed Output Wiring

To connect to an NPN-compatible input, connect one of the high-speed outputs of the vision system directly to the input.

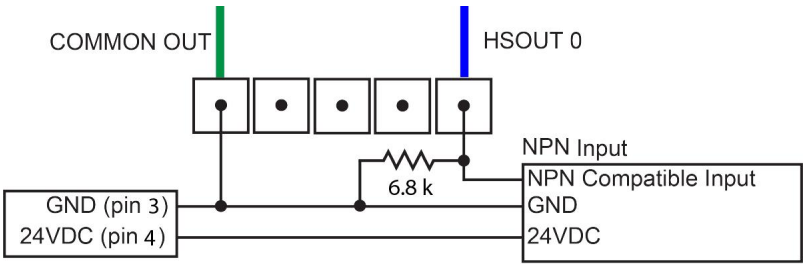

To connect to a PNP-compatible input, connect one of the high-speed outputs of the vision system directly to the input.

Note: A 6.8 K Ohm resistor is required when using PNP outputs to prevent current leakage on Revision 12 models or lower. Revision 13 models or greater do not require an additional resistor to prevent current leakage.

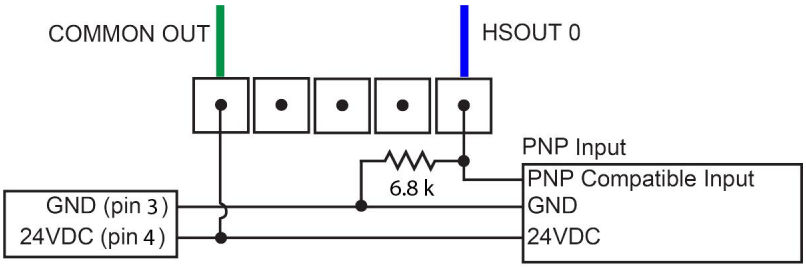

Ethernet Cable

The Ethernet cable provides Ethernet connectivity to the vision system. The Ethernet cable is used to connect the vision system to other network devices.

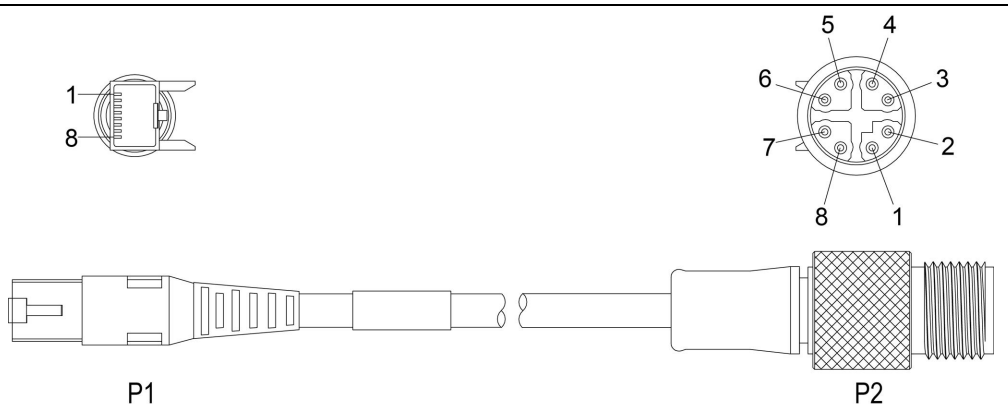

P1 Pin Number	Wire Color	Signal Name	P2 Pin Number
1	White/Orange	TxRx A +	1
2	Orange	TxRx A -	2
3	White/Green	TxRx B +	3
4	Blue	TxRx C +	8
5	White/Blue	TxRx C -	7
6	Green	TxRx B -	4
7	White/Brown	TxRx D +	5
8	Brown	TxRx D -	6

⚠ CAUTION: The Ethernet cable shield must be grounded at the far end. Whatever this cable is plugged into (typically a switch or router) should have a grounded Ethernet connector. A digital voltmeter should be used to validate the grounding. If the far end device is not grounded, a ground wire should be added in compliance with local electrical codes.

ⓘ **Note**:

- Cables are sold separately.
- The wiring for this cable follows standard industrial Ethernet M12 specifications. It differs from the 568B standard.

Breakout Cable

The Breakout cable provides connections to an external power supply, the acquisition trigger input, general-purpose inputs, and high-speed outputs. The Breakout cable is not terminated.

The Breakout cable can be connected to devices, such as a trigger sensor or strobe light. The Breakout cable is not terminated.

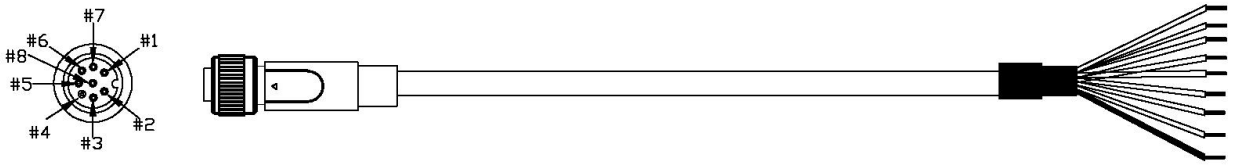

Pin#	Signal Names	Wire Color
1	HSOUT 1	Grey
2	HSOUT 0	Blue
3	GND	Black
4	+24VDC	Red
5	COMMON IN	White/Purple
6	Reserved	Purple
7	IN 0	Orange
8	COMMON OUT	Green
S	Shield	Transparent

Note:

- Cables are sold separately.
- A previous version of this cable used a black shield wire instead of transparent. If you have a previous version of the cable, you can distinguish the shield wire from GND by looking for white printed text on the wire.
- Perform wiring or adjustments to I/O devices when the vision system is not receiving power.
- You can cut exposed wires short or trim wire ends. You also can tie the wires back if you use a tie made of non-conductive material.Keep bare wires separated from the +24 V DC wire.
- When using the 15 meter Breakout cable, full 24 V DC voltage must be maintained at the input leads of the Breakout cable when the vision system is operating.

Cleaning and Maintenance

Clean the Housing

To clean the outside of the vision system housing, use a small amount of mild detergent cleaner or isopropyl alcohol on a cleaning cloth. Do not pour the cleaner on the vision system housing.

⚠ CAUTION: Do not attempt to clean any In-Sight product with harsh or corrosive solvents, including lye, methyl ethyl ketone (MEK) or gasoline.

Clean the Vision System Image Sensor Window

To remove dust from the outside of the image sensor window, use a pressurized air duster. The air must be free of oil, moisture or other contaminants that could remain on the glass and possibly degrade the image. Do not touch the glass window. If oil or smudges remain, use a cotton bud and alcohol (ethyl, methyl, or isopropyl) to clean the window. Do not pour the alcohol on the window.

Clean the Vision System Lens Cover

To remove dust from the lens cover, use a pressurized air duster. The air must be free of oil, moisture or other contaminants that could remain on the lens cover. To clean the plastic window of the lens cover, use a small amount of isopropyl alcohol on a cleaning cloth. Do not scratch the plastic window. Do not pour the alcohol on the plastic window.

Regulations and Conformity

Note: For the most current CE and UKCA declaration and regulatory conformity information, see the Cognex support site: cognex.com/support.

Safety and Regulatory	
Manufacturer	Cognex Corporation One Vision Drive Natick, MA 01760 USA
CE	In-Sight 8900: Regulatory Model 50116 This is a class A product. In a domestic environment this product may cause radio interference in which case the user may be required to take immediate measures. This equipment complies with the essential requirements of the EU Directive 2014/30/EU. Declarations are available from your local representative.
EU RoHS	Compliant to the most recent applicable directive.
FCC	FCC Part 15, Class A This equipment has been tested and found to comply with the limits for a Class A digital device, pursuant to part 15 of the FCC Rules. These limits are designed to provide reasonable protection against harmful interference when the equipment is operated in a commercial environment. This equipment generates, uses, and can radiate radio frequency energy and, if not installed and used in accordance with the instruction manual, may cause harmful interference to radio communications. Operation of this equipment in a residential area is likely to cause harmful interference in which case the user will be required to correct the interference at his own expense.
Korea	Regulatory Model 50116: R-R-CGX-50116 This device is certified for office use only and if used at home, there can be frequency interference problems.
UL, TÜV	Regulatory Model 50116
	NRTL OSHA Scheme for UL/CAN 61010-1.
	CB report available upon request. TÜV SÜD, IEC/EN 61010-1.
UKCA	In-Sight 8900: Regulatory Model 50116 This is a class A product. In a domestic environment this product may cause radio interference in which case the user may be required to take immediate measures. This equipment complies with the essential requirements of the Electromagnetic Compatibility Regulations 2016. Declarations are available from your local representative.

中国大陆RoHS (Information for China RoHS Compliance)

根据中国大陆《电子信息产品污染控制管理办法》(也称为中国大陆RoHS), 以下部份列出了本产品中可能包含的有毒有害物质或元素的名称和含量。



	Hazardous Substances 有害物质					
Part Name 部件名称	Lead (Pb) 铅	Mercury (Hg) 汞	Cadmium (Cd) 镉	Hexavalent Chromium (Cr (VI)) 六价铬	Polybrominated biphenyls (PBB) 多溴联苯	Polybrominated diphenyl ethers (PBDE) 多溴二苯醚
Regulatory Model 50116	X	O	O	O	O	O

This table is prepared in accordance with the provisions of SJ/T 11364.
这个标签是根据SJ / T 11364 的规定准备的。

O: Indicates that said hazardous substance contained in all of the homogeneous materials for this part is below the limit requirement of GB / T26572 - 2011.
表示本部件所有均质材料中含有的有害物质低于GB / T26572 - 2011 的限量要求。

X: Indicates that said hazardous substance contained in at least one of the homogeneous materials used for this part is above the limit requirement of GB / T26572 - 2011.
表示用于本部件的至少一种均质材料中所含的危害物质超过GB / T26572 - 2011 的限制要求。

For European Community Users

Cognex complies with Directive 2012/19/EU OF THE EUROPEAN PARLIAMENT AND OF THE COUNCIL of 4 July 2012 on waste electrical and electronic equipment (WEEE).

This product has required the extraction and use of natural resources for its production. It may contain hazardous substances that could impact health and the environment, if not properly disposed.

In order to avoid the dissemination of those substances in our environment and to diminish the pressure on the natural resources, we encourage you to use the appropriate take-back systems for product disposal. Those systems will reuse or recycle most of the materials of the product you are disposing in a sound way.


The crossed out wheeled bin symbol informs you that the product should not be disposed of along with municipal waste and invites you to use the appropriate separate take-back systems for product disposal.

If you need more information on the collection, reuse, and recycling systems, please contact your local or regional waste administration.

You may also contact your supplier for more information on the environmental performance of this product.